Low Noise 150mA LDO Regulator for Industrial Applications

NO.EA-336-230725

OUTLINE

The RP130x is a CMOS-based positive voltage regulator IC with high ripple rejection, low dropout voltage, high output voltage accuracy and extremely low supply current. The RP130x consists of a voltage reference unit, an error amplifier, a resistor network for voltage setting, a short current limit circuit, and a chip enable circuit.

The RP130x has low supply current characteristics in the CMOS process. In addition, the RP130x can supply a low dropout voltage, which becomes the smallest difference between the input voltage and output voltage by having a low on-resistance and also can achieve the battery's long life by a chip enable function.

When compared with the conventional products of high-speed type, the RP130x achieves low consumption current of 38μA (Typ.) while improving the input transient response, the load transient response, and the ripple rejection.

The RP130x supports two package types: DFN(PL)1010-4 and SOT-23-5. By the adoption of the ultra-compact DFN(PL)1010-4, the RP130x can achieve a higher density mounting than ever.

This is a high-reliability semiconductor device for industrial applications (-Y) that has passed both the screening at high temperature and the reliability test with extended hours.

FEATURES

- Input Voltage Range (Max. Rating) ····· 1.7V to 6.5V (7.0V)
- Operating Temperature Range ····· - 40°C to 105°C
- Supply Current ····· Typ. 38μA
- Supply Current (Standby Mode) ····· Typ. 0.1μA
- Ripple Rejection ····· Typ. 80dB (f = 1kHz)
- Output Voltage Range ····· 1.2V, 1.5V, 1.8V, 2.5V, 2.8V, 2.9V, 3.0V, 3.3V, 3.4V, 3.6V, 4.2V and 5.0V
  Contact our sales representatives for other voltages.
- Output Voltage Accuracy ····· ±1.0% (V_{SET} > 2.0V, Ta = 25°C)
- Temperature-Drift Coefficient of Output Voltage ···· Typ. ±20 ppm / °C
- Dropout Voltage ····· Typ. 0.32V (I_{OUT} = 150mA, V_{SET} = 2.8V)
- Line Regulation ····· Typ. 0.02% / V
- Packages ····· DFN(PL)1010-4, SOT-23-5
- Built-in Fold Back Protection Circuit ····· Typ. 40mA
- Recommended Ceramic Capacitors ····· 0.47μF or more
- Output Noise Voltage ····· Typ. V_{SET} × 20 [μVrms]
  (BW = 10Hz to 100kHz, I_{OUT} = 30mA)

APPLICATIONS

- Industrial equipments such as FAs and smart meters
- Equipments used under high-temperature conditions such as surveillance camera and vending machine
- Equipments accompanied by self-heating such as motor and lighting

BLOCK DIAGRAMS

RP130xxx1B

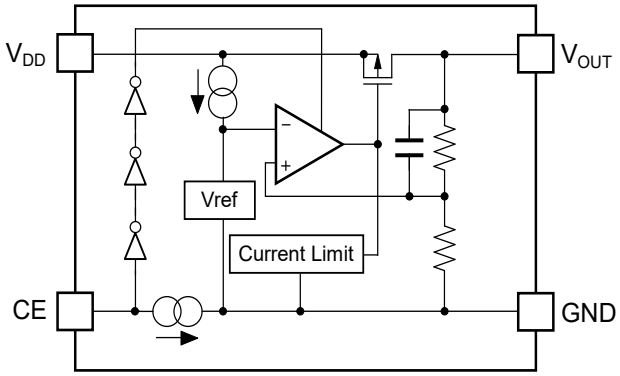

RP130xxx1D

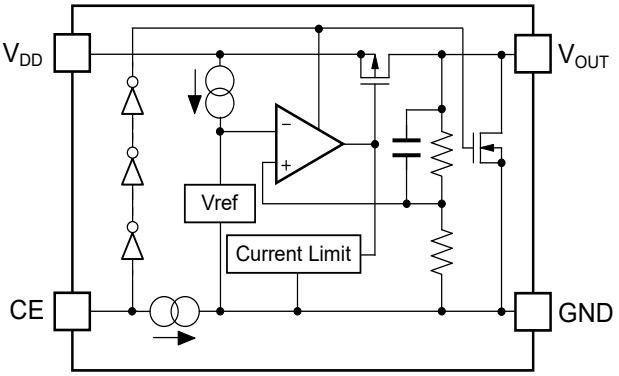

SELECTION GUIDE

The output voltage, chip-enable polarity, auto-discharge function, and package type for this device can be selected at the user's request.

Product Name	Package	Quantity per Reel	Pb Free	Halogen Free
RP130Kxx1∗-TR-Y	DFN(PL)1010-4	10,000pcs	Yes	Yes
RP130Nxx1∗-TR-YE	SOT-23-5	3,000pcs	Yes	Yes

xx : Specify the set output voltage (V_{SET})
1.2 V (12) / 1.5 V (15) / 1.8 V (18) / 2.5 V (25) / 2.8 V (28) / 2.9 V (29) /
3.0 V (30) / 3.3 V (33) / 3.4 V (34) / 3.6 V (36) / 4.2 V (42) / 5.0 V (50)
Note: Contact our sales representatives for other voltages.

∗ : Specify the desired functions for chip-enable polarity and auto-discharge
B: "H" active / No auto-discharge function
D: "H" active / Auto-discharge function

Auto-Discharge function quickly lowers the output voltage to 0V by releasing the electrical charge in the external capacitor when the chip enable signal is switched from the active mode to the standby mode.

PIN DESCRIPTION

● **DFN(PL)1010-4**

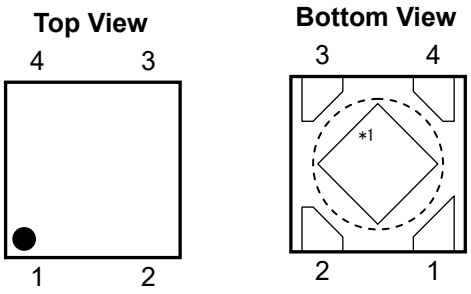

● **SOT-23-5**

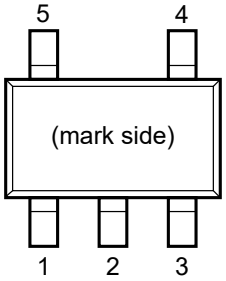

DFN(PL)1010-4

Pin No.	Symbol	Description
1	V_{OUT}	Output Pin
2	GND	Ground Pin
3	CE	Chip Enable Pin ("H" Active)
4	V_{DD}	Input Pin

*1 The tab on the bottom of the package enhances thermal performance and is electrically connected to GND (substrate level). It is recommended that the tab be connected to the ground plane on the board, or otherwise be left floating.

SOT-23-5

Pin No.	Symbol	Description
1	V_{DD}	Input Pin
2	GND	Ground Pin
3	CE	Chip Enable Pin ("H" Active)
4	NC	No Connection
5	V_{OUT}	Output Pin

ABSOLUTE MAXIMUM RATINGS

Symbol	Item	Rating	Unit
V_{IN}	Input Voltage	- 0.3 to 7.0	V
V_{CE}	Input Voltage (CE Pin)	- 0.3 to 7.0	V
V_{OUT}	Output Voltage	- 0.3 to V_{IN}+0.3	V
I_{OUT}	Output Current	200	mA
P_D	Power Dissipation	Refer to "*PACKAGE INFORMATION*"	
Tj	Junction Temperature	- 40 to 125	°C
Tstg	Strong Temperature Range	- 55 to 125	°C

ABSOLUTE MAXIMUM RATINGS

Electronic and mechanical stress momentarily exceeded absolute maximum ratings may cause permanent damage and may degrade the life time and safety for both device and system using the device in the field.
The functional operation at or over these absolute maximum rating is not assured.

RECOMMENDED OPERATING CONDITIONS

Symbol	Item	Rating	Unit
V_{IN}	Input Voltage	1.7 to 6.5	V
Ta	Operating Temperature Range	- 40 to 105	°C

RECOMMENDED OPERATING CONDITIONS

All of electronic equipment should be designed that the mounted semiconductor devices operate within the recommended operating conditions. The semiconductor devices cannot operate normally over the recommended operating conditions, even if they are used over such conditions by momentary electronic noise or surge. And the semiconductor devices may receive serious damage when they continue to operate over the recommended operating conditions.

ELECTRICAL CHARACTERISTICS

V_{IN} = V_{SET}+1.0V (V_{SET} > 1.5V), V_{IN} = 2.5V (V_{SET} ≤ 1.5V), I_{OUT} = 1mA, C_{IN} = C_{OUT} = 0.47µF, unless otherwise noted.
The specifications surrounded by [ ] are guaranteed by design engineering at - 40ºC ≤ Ta ≤ 105ºC.

RP130xxx1B/D (**Ta = 25°C**)

Symbol	Item	Conditions		Min.	Typ.	Max.	Unit
V_{OUT}	Output Voltage	Ta = 25°C	V_{SET} > 2.0V	×0.99		×1.01	V
			V_{SET} ≤ 2.0V	- 20		20	mV
		- 40°C ≤ Ta ≤ 105°C	V_{SET} > 2.0V	[×0.985]		[×1.015]	V
			V_{SET} ≤ 2.0V	[- 30]		[30]	mV
I_{OUT}	Output Current			[150]			mA
ΔV_{OUT} /ΔI_{OUT}	Load Regulation	1mA ≤ I_{OUT} ≤ 150mA			10	[30]	mV
V_{DIF}	Dropout Voltage	I_{OUT} = 150mA	1.2V ≤ V_{SET} < 1.5V		0.67	[1.03]	V
			1.5V ≤ V_{SET} < 1.7V		0.54	[0.84]	
			1.7V ≤ V_{SET} < 2.0V		0.46	[0.75]	
			2.0V ≤ V_{SET} < 2.5V		0.41	[0.63]	
			2.5V ≤ V_{SET} < 4.0V		0.32	[0.51]	
			4.0V ≤ V_{SET} ≤ 4.2V		0.24	[0.39]	
			V_{SET} = 5V		0.24	[0.31]	
I_{SS}	Supply Current	I_{OUT} = 0mA			38	[58]	µA
Istandby	Supply Current (at Standby)	V_{CE} = 0			0.1	1.0	µA
ΔV_{OUT} /ΔV_{IN}	Line Regulation	V_{SET} + 0.5V ≤ V_{IN} ≤ 6.5V			0.02	[0.10]	%/V
I_{SC}	Short Current Limit	V_{OUT} = 0V			40		mA
I_{PD}	CE Pull-down Current				0.4		µA
V_{CEH}	CE Input Voltage "H"			[1.0]			V
V_{CEL}	CE Input Voltage "L"					[0.36]	V
R_{LOW}	Nch ON Resistance for Auto Discharge (D Version Only)	V_{IN} = 4.0V, V_{CE} = 0V			30		Ω

All test items listed under Electrical Characteristics are done under the pulse load condition (Tj ≈ Ta = 25°C)

Product-specific Electrical Characteristics

The specifications surrounded by [ ] are guaranteed by design engineering at - 40ºC ≤ Ta ≤ 105ºC.

(Ta = 25°C)

Product Name	V_{OUT} [V] (Ta = 25°C)			V_{OUT} [V] (Ta = − 40 to 105°C)			V_{DIF} [V]	
	Min.	Typ.	Max.	Min.	Typ.	Max.	Typ.	Max.
RP130x121x	1.180	1.200	1.220	1.170	1.200	1.230	0.67	1.03
RP130x151x	1.480	1.500	1.520	1.470	1.500	1.530	0.54	0.84
RP130x181x	1.780	1.800	1.820	1.770	1.800	1.830	0.46	0.75
RP130x251x	2.475	2.500	2.525	2.463	2.500	2.538	0.32	0.51
RP130x281x	2.772	2.800	2.828	2.758	2.800	2.842		
RP130x291x	2.871	2.900	2.929	2.857	2.900	2.944		
RP130x301x	2.970	3.000	3.030	2.955	3.000	3.045		
RP130x331x	3.267	3.300	3.333	3.251	3.300	3.350		
RP130x341x	3.366	3.400	3.434	3.349	3.400	3.451		
RP130x361x	3.564	3.600	3.636	3.546	3.600	3.654		
RP130x421x	4.158	4.200	4.242	4.137	4.200	4.263	0.24	0.39
RP130x501x	4.950	5.000	5.050	4.925	5.000	5.075	0.24	0.31

TYPICAL APPLICATION

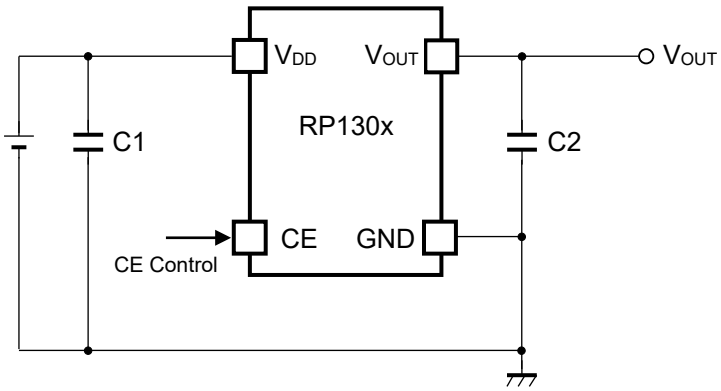

External Components：

Symbol	Description
C2	0.47μF (Ceramic)

TECHNICAL NOTES

Phase Compensation

In the ICs, phase compensation is made for securing stable operation even if the load current is varied. For this purpose, use a capacitor C2 with 0.47μF or more.

If a tantalum capacitor is used, and its ESR (Equivalent Series Resistance) of C2 is large, the loop oscillation may result. Because of this, select C2 carefully considering its frequency characteristics.

PCB Layout

Make V_{DD} and GND lines sufficient. If their impedance is too high, noise pickup or unstable operation may result. Connect 0.47μF or more of the capacitor C1 between the V_{DD} and GND, and as close as possible to the pins.

In addition, connect the capacitor C2 between V_{OUT} and GND, and as close as possible to the pins.

TYPICAL APPLICATION FOR IC CHIP BREAKDOWN PREVENTION

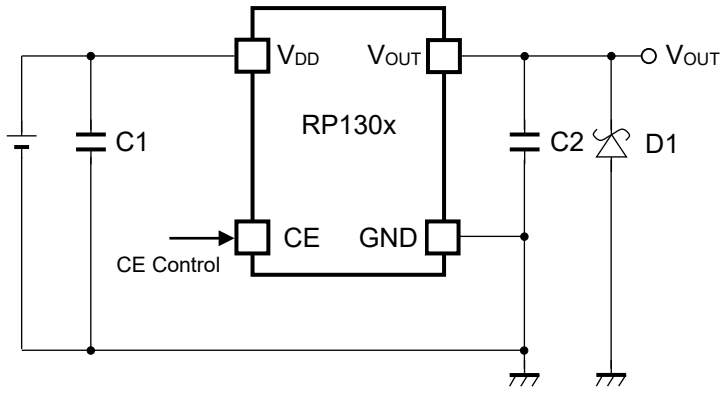

When a sudden surge of electrical current travels along the V_{OUT} pin and GND due to a short-circuit, electrical resonance of a circuit involving an output capacitor (C2) and a short circuit inductor generates a negative voltage and may damage the device or the load devices. Connecting a schottky diode (D1) between the V_{OUT} pin and GND has the effect of preventing damage to them.

PACKAGE INFORMATION

Power Dissipation (DFN(PL)1010-4) PD-DFN(PL)1010-4-(105125)-JE-B

The power dissipation of the package is dependent on PCB material, layout, and environmental conditions. The following measurement conditions are based on JEDEC STD. 51-7.

Measurement Conditions

Item	Measurement Conditions
Environment	Mounting on Board (Wind Velocity = 0m/s)
Board Material	Glass Cloth Epoxy Plastic (Four-Layer Board)
Board Dimensions	76.2mm × 114.3mm × 0.8mm
Copper Ratio	Outer Layer (First Layer): Less than 95% of 50mm Square Inner Layers (Second and Third Layers): Approx. 100% of 50mm Square Outer Layer (Fourth Layer): Approx. 100% of 50mm Square
Through-holes	ϕ 0.2mm × 21pcs

Measurement Result (Ta = 25°C, Tjmax = 125°C)

Item	Measurement Result
Power Dissipation	800mW
Thermal Resistance (θja)	θja = 125°C/W
Thermal Characterization Parameter (ψjt)	ψjt = 58°C/W

θja: Junction-to-Ambient Thermal Resistance

ψjt: Junction-to-Top Thermal Characterization Parameter

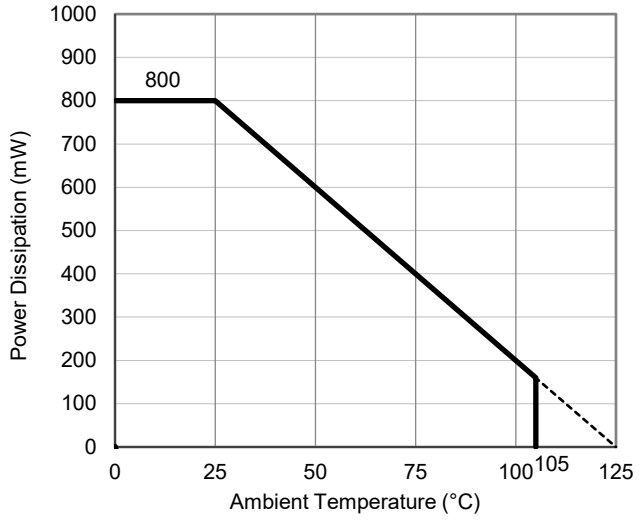

Power Dissipation vs. Ambient Temperature

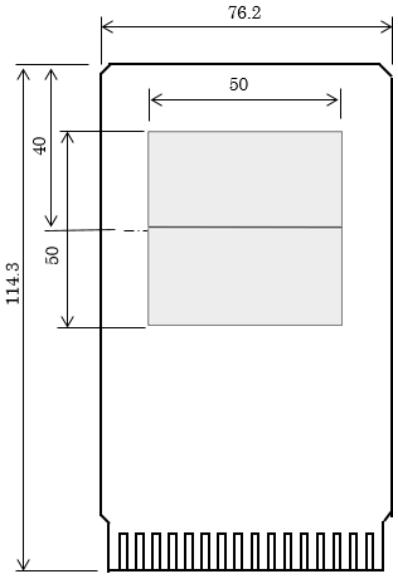

Measurement Board Pattern

Package Dimensions (DFN(PL)1010-4) DM-DFN(PL)1010-4-JE-C

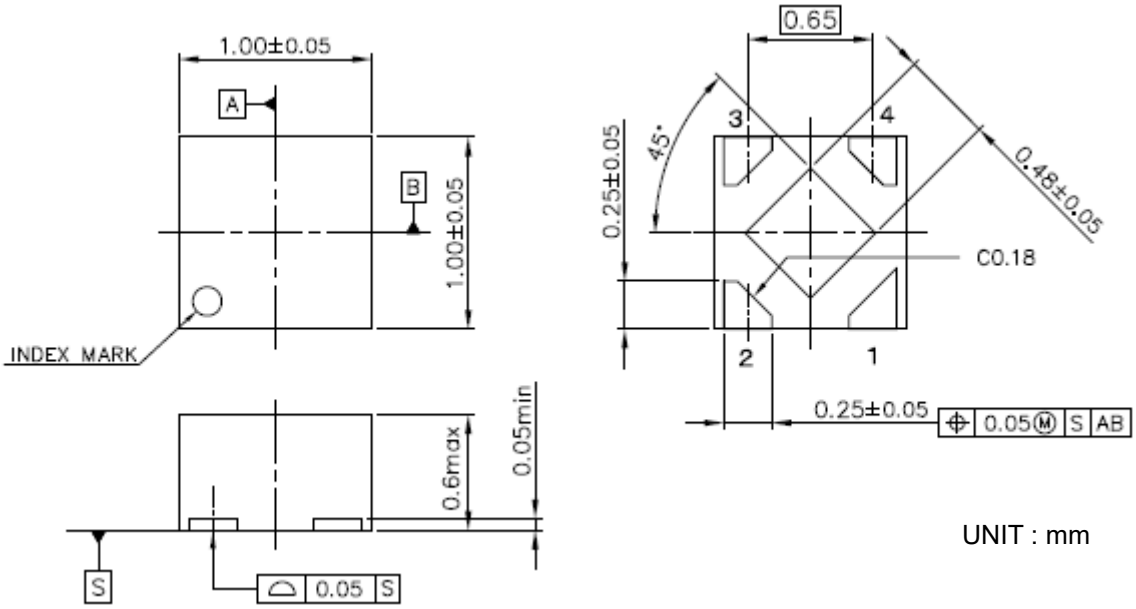

UNIT : mm

DFN(PL)1010-4 Package Dimensions

● Mark Specifications (DFN(PL)1010-4)

MK-RP130K-JYEY-A

①②: Product Code … **Refer to "*RP130K Mark Specification Table*"**

③④: Lot Number …Alphanumeric Serial Number

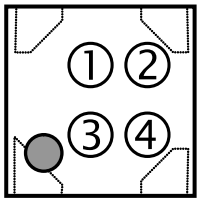

DFN(PL)1010-4 Mark Specifications

RP130K Mark Specification Table (DFN(PL)1010-4)

RP130Kxx1B

Product Name	① ②	V_{SET}
RP130K121B	T A	1.2 V
RP130K151B	T D	1.5 V
RP130K181B	T G	1.8 V
RP130K251B	T Q	2.5 V
RP130K281B	T T	2.8 V
RP130K291B	T V	2.9 V
RP130K301B	T W	3.0 V
RP130K331B	T Z	3.3 V
RP130K341B	U A	3.4 V
RP130K361B	U C	3.6 V
RP130K421B	U J	4.2 V
RP130K501B	U S	5.0 V

RP130Kxx1D

Product	① ②	V_{SET}
RP130K121D	V A	1.2 V
RP130K151D	V D	1.5 V
RP130K181D	V G	1.8 V
RP130K251D	V Q	2.5 V
RP130K281D	V T	2.8 V
RP130K291D	V V	2.9 V
RP130K301D	V W	3.0 V
RP130K331D	V Z	3.3 V
RP130K341D	W A	3.4 V
RP130K361D	W C	3.6 V
RP130K421D	W J	4.2 V
RP130K501D	W S	5.0 V

Power Dissipation (SOT-23-5)

PD-SOT-23-5-(105125)-JE-B

The power dissipation of the package is dependent on PCB material, layout, and environmental conditions. The following measurement conditions are based on JEDEC STD. 51-7.

Measurement Conditions

Item	Measurement Conditions
Environment	Mounting on Board (Wind Velocity = 0m/s)
Board Material	Glass Cloth Epoxy Plastic (Four-Layer Board)
Board Dimensions	76.2mm × 114.3mm × 0.8mm
Copper Ratio	Outer Layer (First Layer): Less than 95% of 50mm Square Inner Layers (Second and Third Layers): Approx. 100% of 50mm Square Outer Layer (Fourth Layer): Approx. 100% of 50mm Square
Through-holes	ϕ 0.3 mm × 7 pcs

Measurement Result (Ta = 25°C, Tjmax = 125°C)

Item	Measurement Result
Power Dissipation	660mW
Thermal Resistance (θja)	θja = 150°C/W
Thermal Characterization Parameter (ψjt)	ψjt = 51°C/W

θja: Junction-to-Ambient Thermal Resistance

ψjt: Junction-to-Top Thermal Characterization Parameter

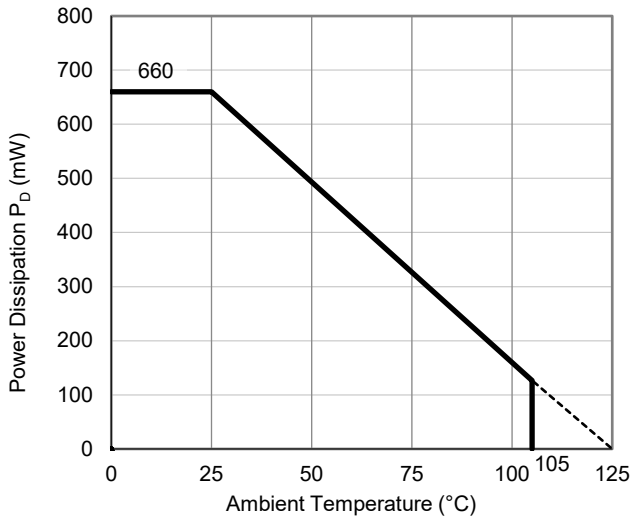

Power Dissipation vs. Ambient Temperature

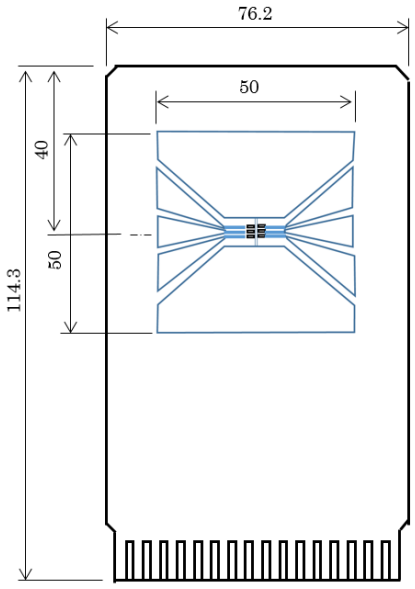

Measurement Board Pattern

Package Dimensions (SOT-23-5) DM-SOT-23-5-JE-A

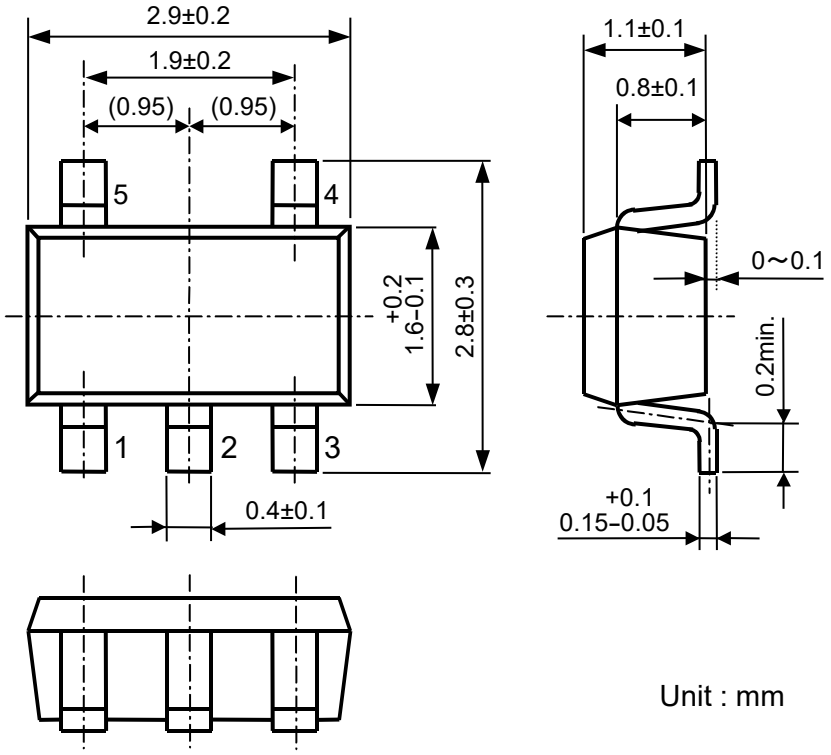

Unit : mm

SOT-23-5 Package Dimensions

Mark Specifications (SOT-23-5)

MK-RP130N-JYEY-A

①②③: Product Code … **Refer to "*RP130N Mark Specification Table*"**

④⑤: Lot Number …Alphanumeric Serial Number

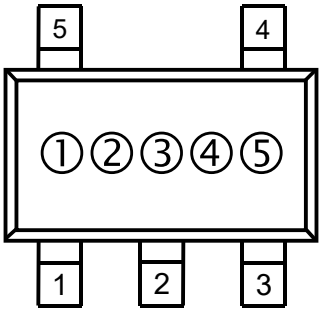

SOT-23-5 Mark Specifications

RP130N Mark Specification Table (SOT-23-5)

RP130Nxx1B

Product Name	①②③	V_{SET}
RP130N121B	H 1 A	1.2 V
RP130N151B	H 1 D	1.5 V
RP130N181B	H 1 G	1.8 V
RP130N251B	H 1 Q	2.5 V
RP130N281B	H 1 T	2.8 V
RP130N291B	H 1 V	2.9 V
RP130N301B	H 1 W	3.0 V
RP130N331B	H 1 Z	3.3 V
RP130N341B	J 1 A	3.4 V
RP130N361B	J 1 C	3.6 V
RP130N421B	J 1 J	4.2 V
RP130N501B	J 1 S	5.0 V

RP130Nxx1D

Product Name	①②③	V_{SET}
RP130N121D	H 2 A	1.2 V
RP130N151D	H 2 D	1.5 V
RP130N181D	H 2 G	1.8 V
RP130N251D	H 2 Q	2.5 V
RP130N281D	H 2 T	2.8 V
RP130N291D	H 2 V	2.9 V
RP130N301D	H 2 W	3.0 V
RP130N331D	H 2 Z	3.3 V
RP130N341D	J 2 A	3.4 V
RP130N361D	J 2 C	3.6 V
RP130N421D	J 2 J	4.2 V
RP130N501D	J 2 S	5.0 V

TEST CIRCUITS

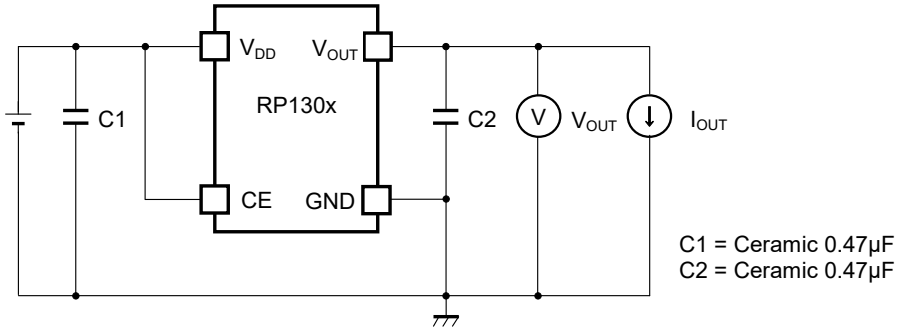

Standard Test Circuit

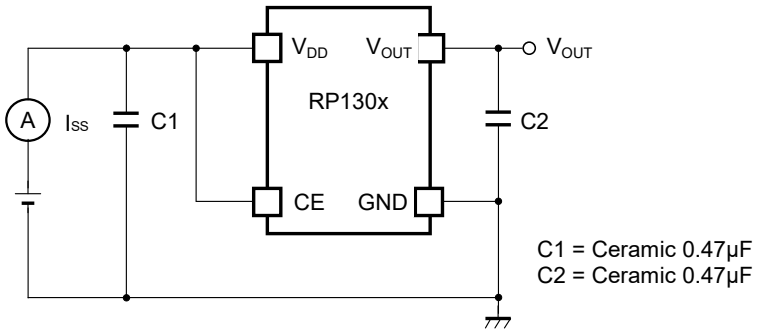

Supply Current Test Circuit

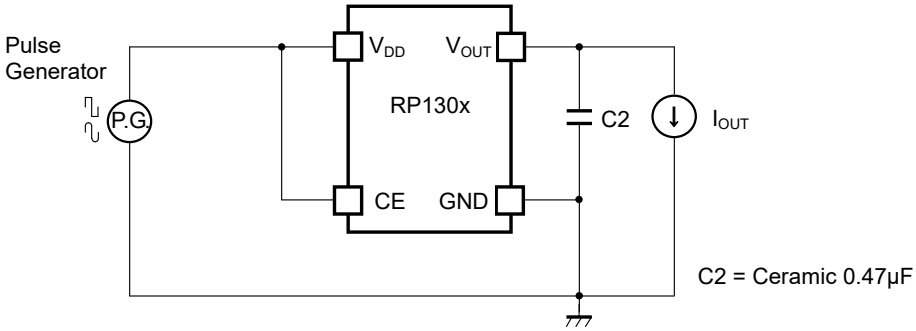

Ripple Rejection, Line Transient Response Test Circuit

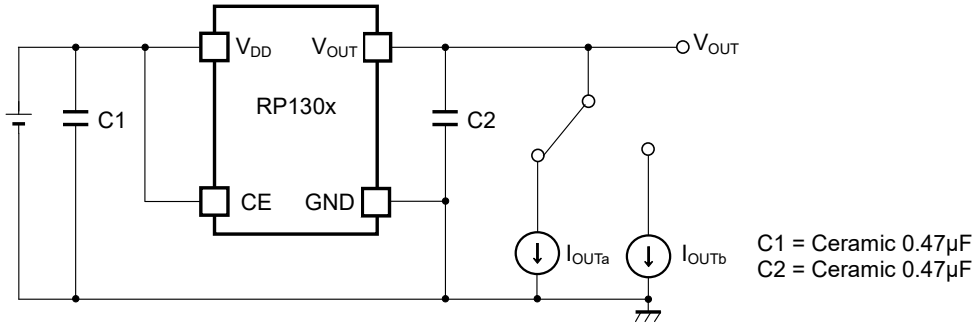

Load Transient Response Test Circuit

TYPICAL CHARACTERISTICS

Note: Typical Characteristics are intended to be used as reference data; they are not guaranteed.

1) Output Voltage vs. Output Current (C1 = C2 = 0.47µF, Ta = 25°C)

RP130x121x

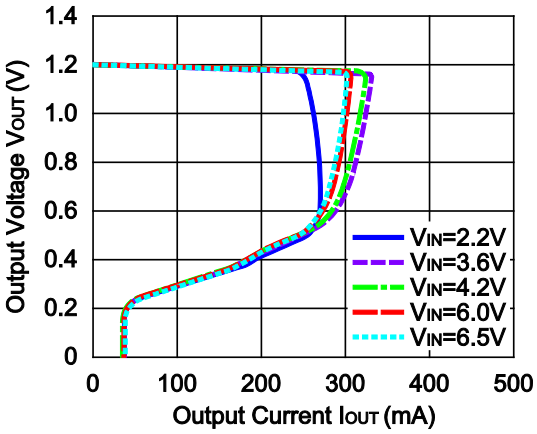

RP130x281x

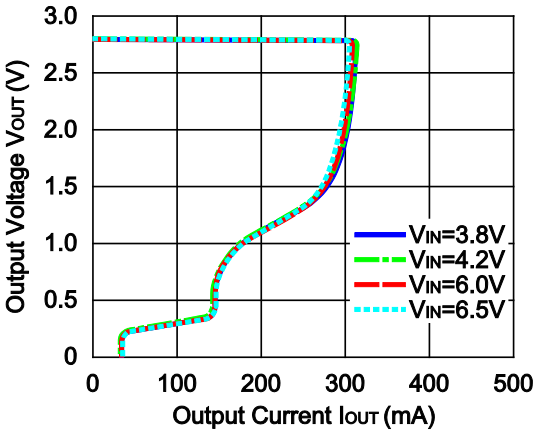

RP130x501x

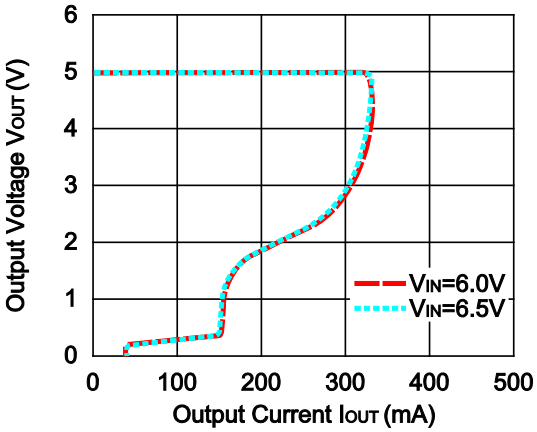

2) Output Voltage vs. Input Voltage (C1 = C2 = 0.47µF, Ta = 25°C)

RP130x121x

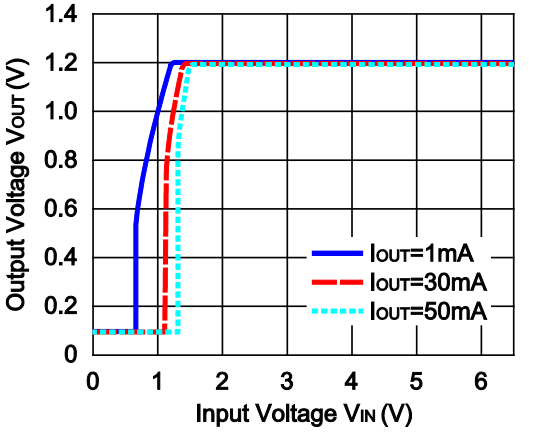

RP130x281x

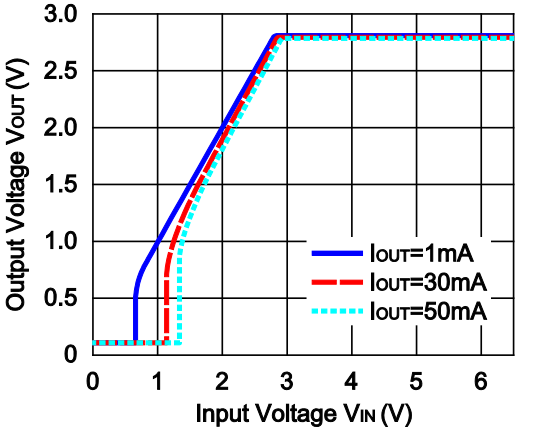

RP130x501x

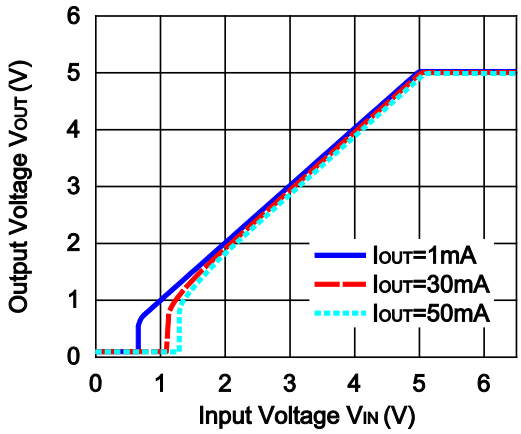

3) Supply Current vs. Input Voltage (C1 = C2 = 0.47µF, Ta = 25°C)

RP130x121x

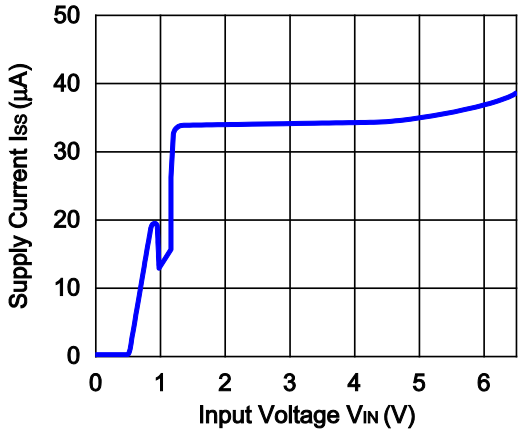

RP130x281x

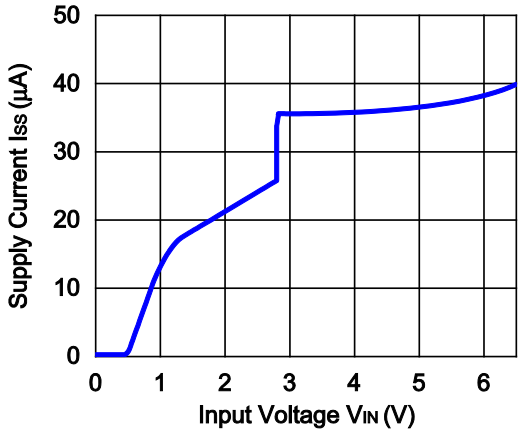

RP130x501x

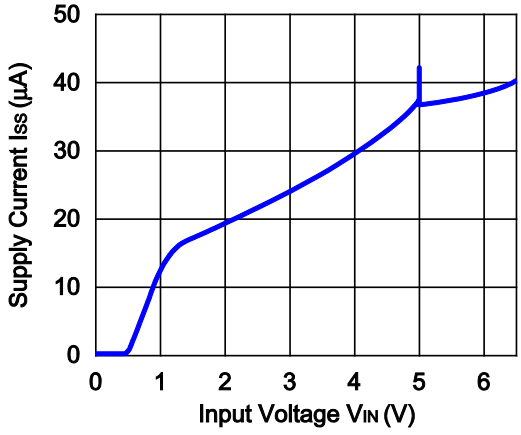

4) Output Voltage vs. Temperature (I_{OUT} = 1mA, C1 = C2 = 0.47µF)

RP130x121x

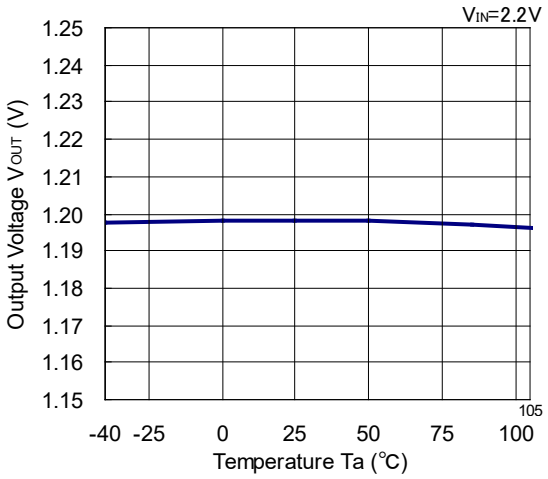

RP130x281x

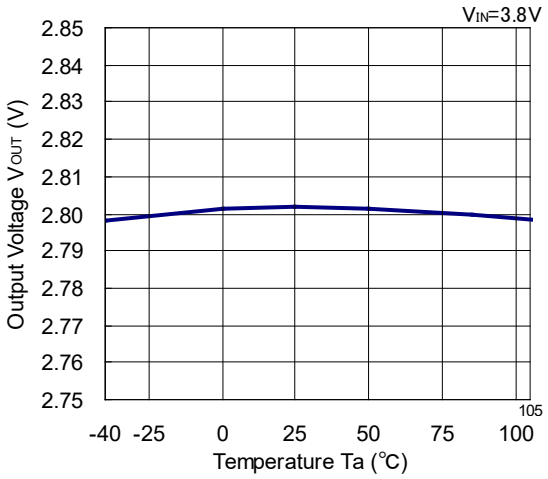

RP130x501x

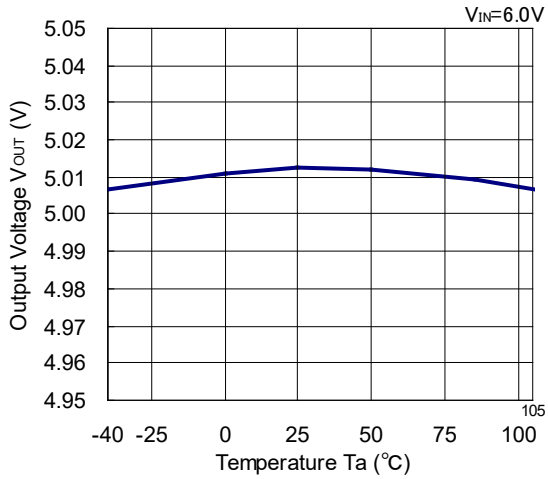

5) Supply Current vs. Temperature (I_{OUT} = 0mA, C1 = C2 = 0.47µF)

RP130x121x

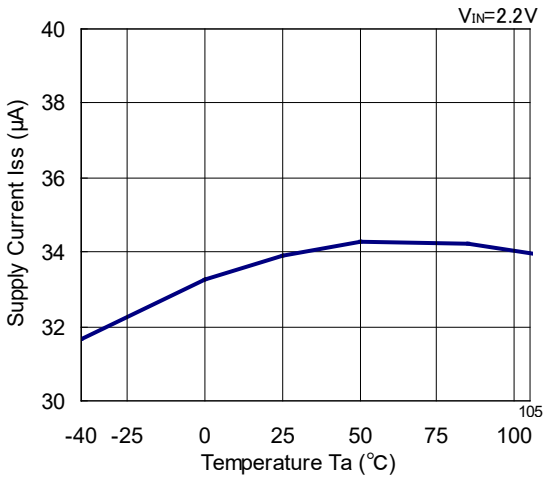

RP130x281x

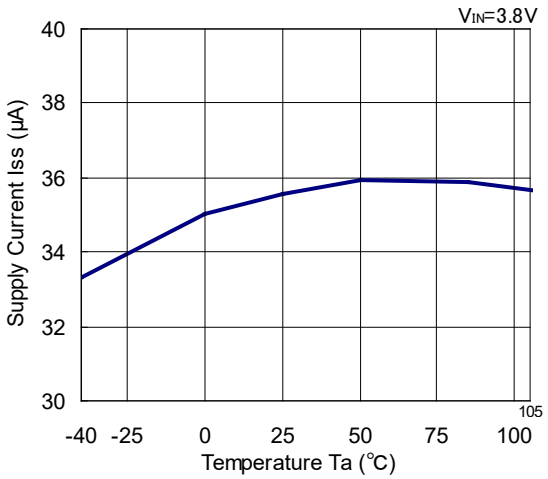

RP130x501x

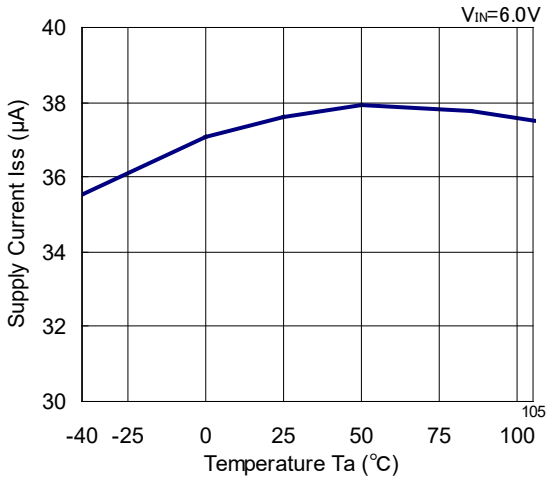

6) Dropout Voltage vs. Output Current (C1 = C2 = 0.47µF)

RP130x121x

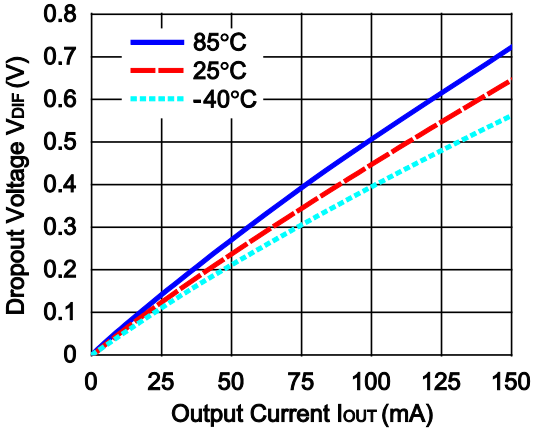

RP130x281x

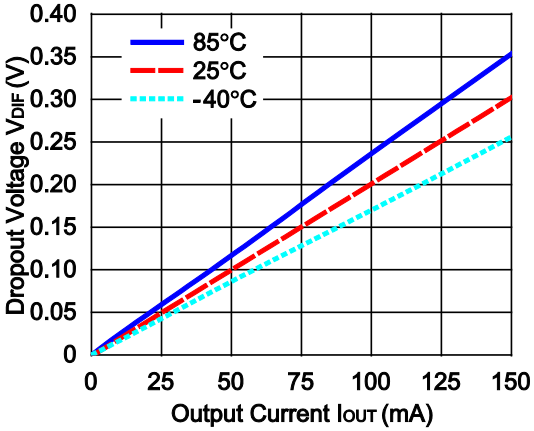

RP130x501x

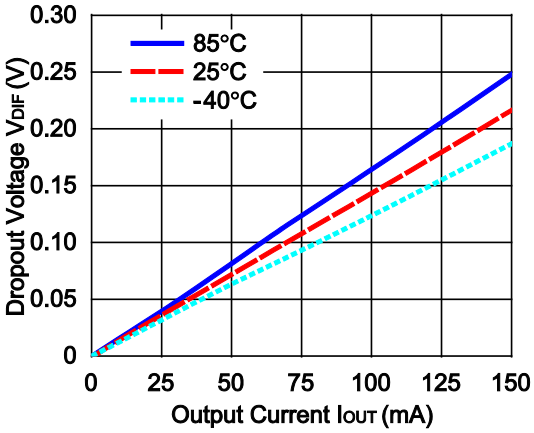

7) Dropout Voltage vs. Set Output Voltage (C1 = C2 = 0.47µF)

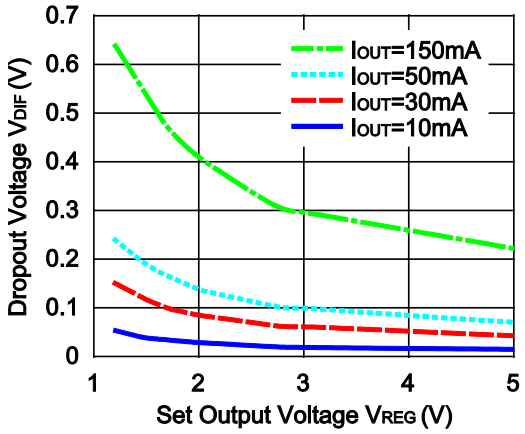

8) Ripple Rejection vs. Input Bias Voltage (C1 = none, C2 = 0.47µF, Ripple = 0.2Vp-p, Ta = 25°C)

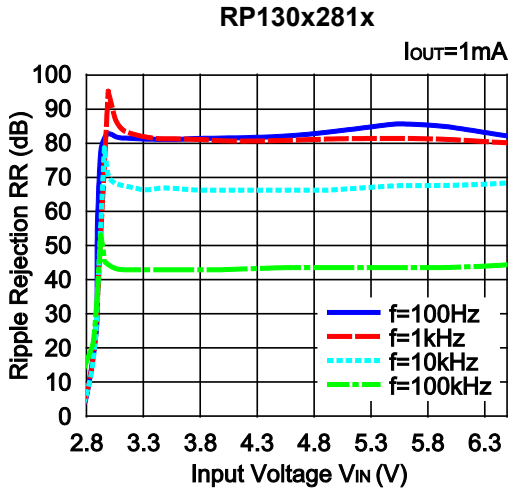

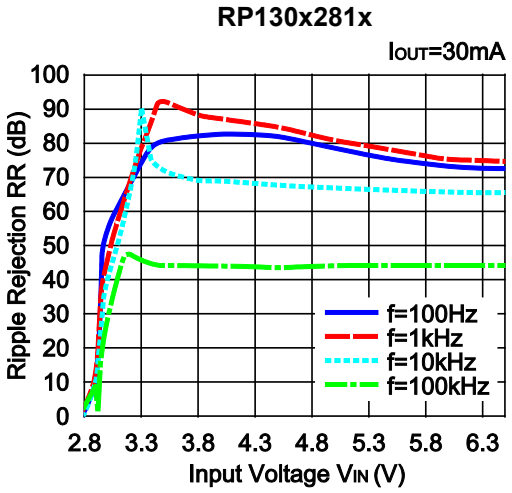

9) Ripple Rejection vs. Frequency (C1 = none, C2 = 0.47µF, Ripple = 0.2Vp-p, Ta = 25°C)

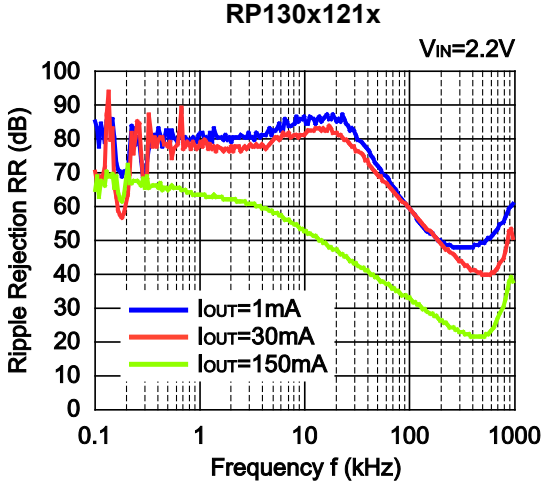

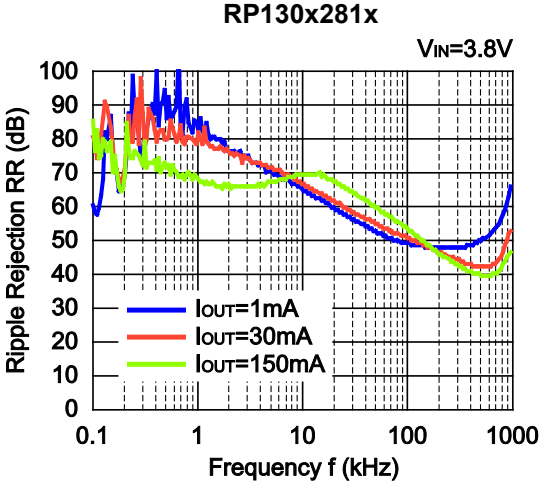

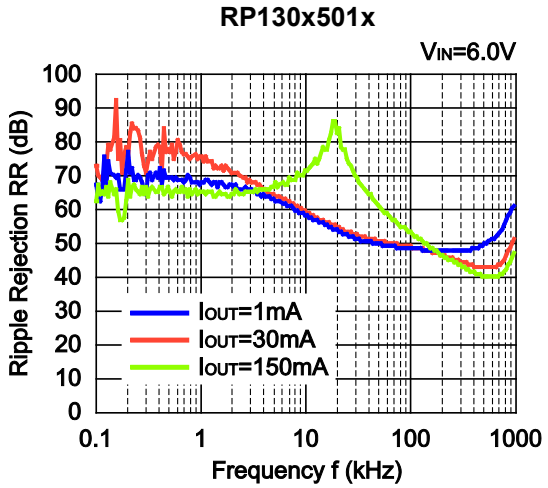

10) Input Transient Response (I_{OUT} = 30mA, tr = tf = 5µs, C1 = none, C2 = 0.47µF, Ta = 25°C)

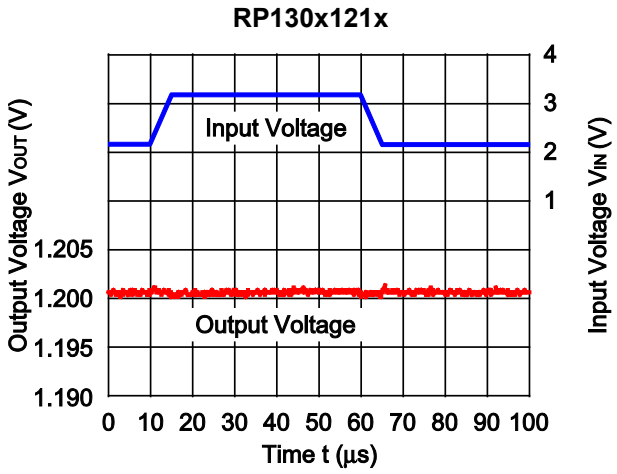

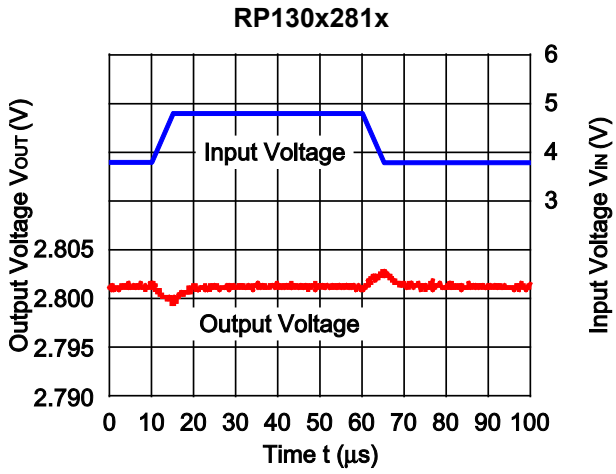

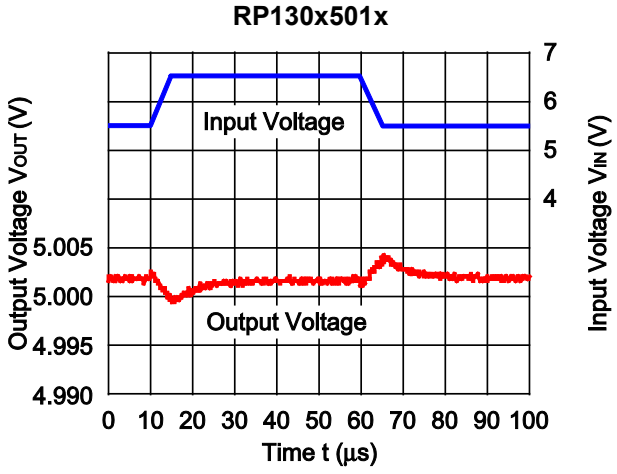

11) Load Transient Response (tr = tf = 0.5µs, C1 = C2 = 0.47µF, I_{OUT} = 50mA ⇔100mA, Ta = 25°C)

RP130x121x

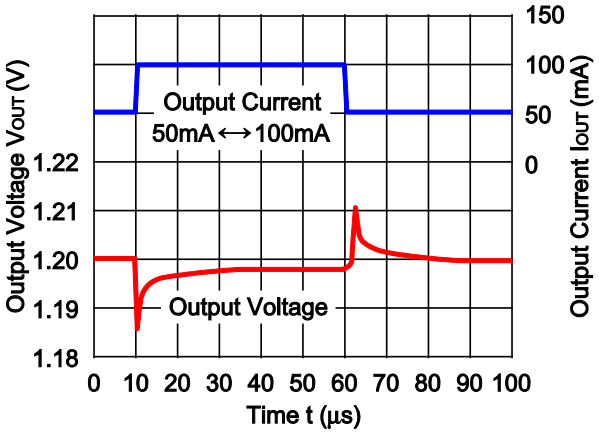

RP130x281x

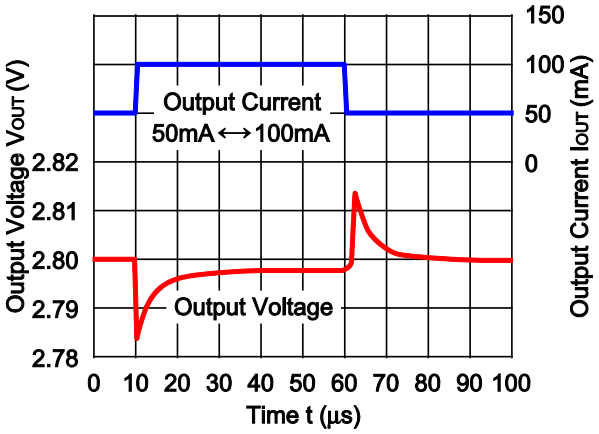

RP130x501x

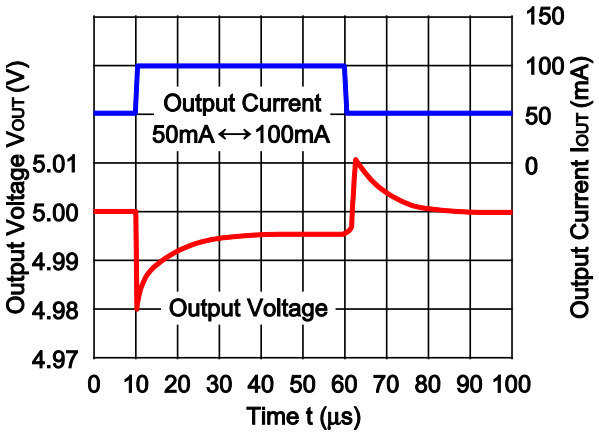

12) Load Transient Response (tr = tf = 0.5µs, C1 = C2 = 0.47µF, I_{OUT} = 1mA ⇔ 150mA, Ta = 25°C)

RP130x121x

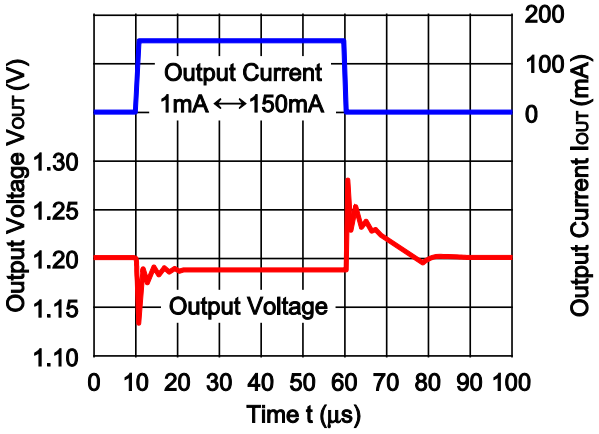

RP130x281x

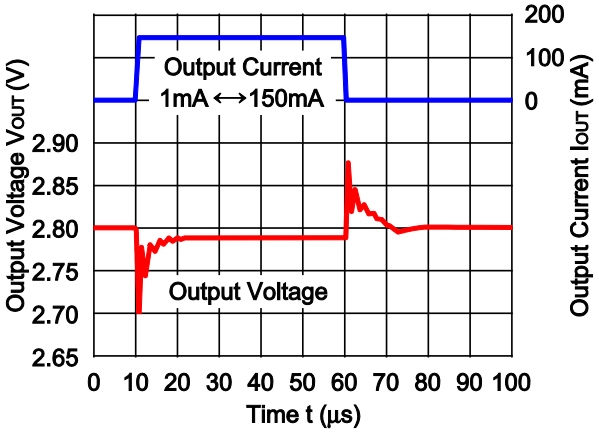

RP130x501x

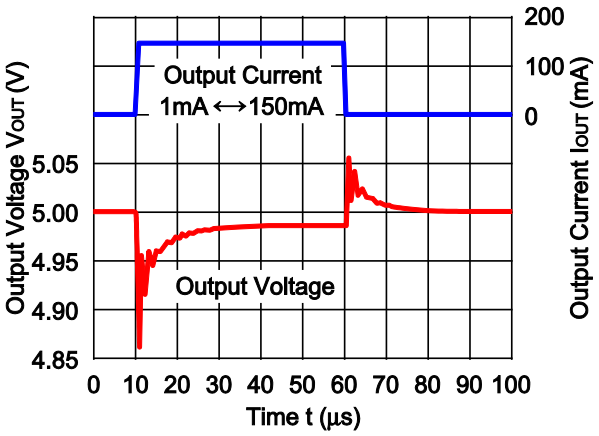

13) Rise Time with CE Pin (C1 = C2 = 0.47µF, Ta = 25°C)

RP130x121x

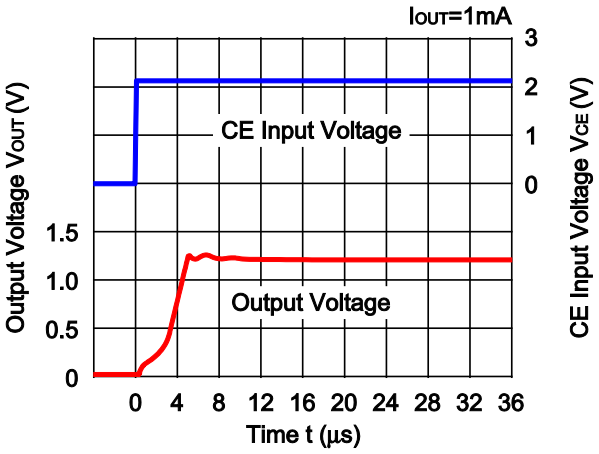

RP130x121x

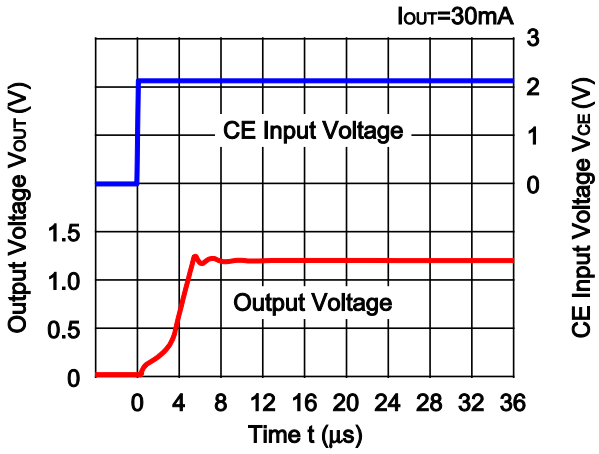

RP130x121x

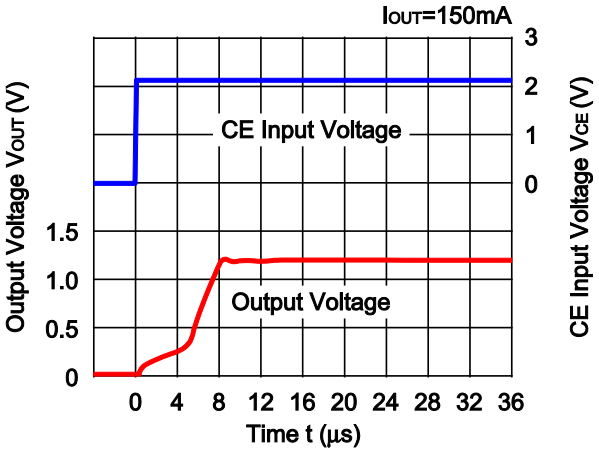

RP130x281x

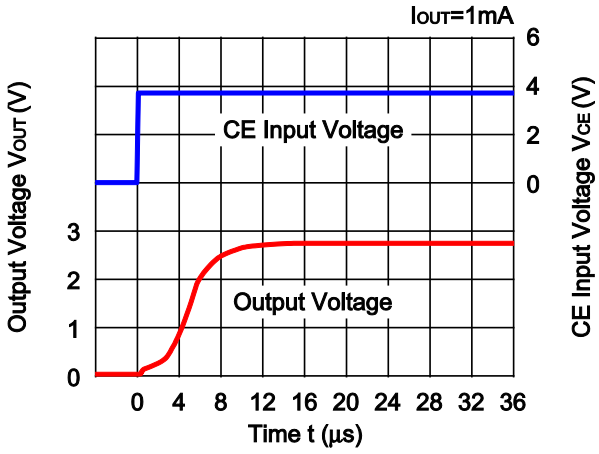

RP130x281x

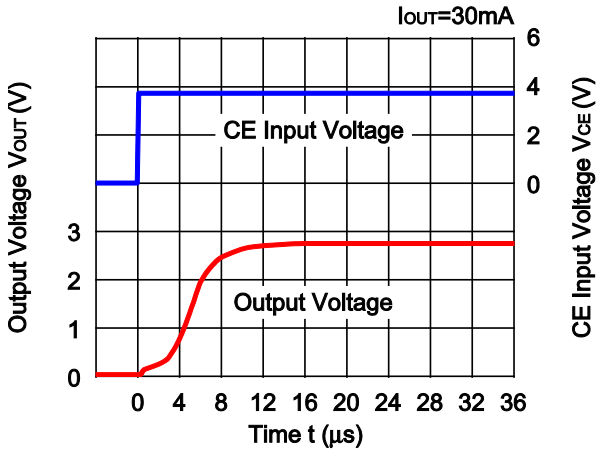

RP130x281x

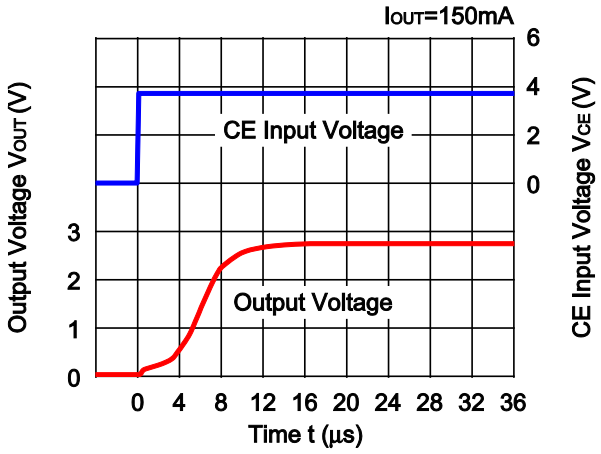

RP130x501x

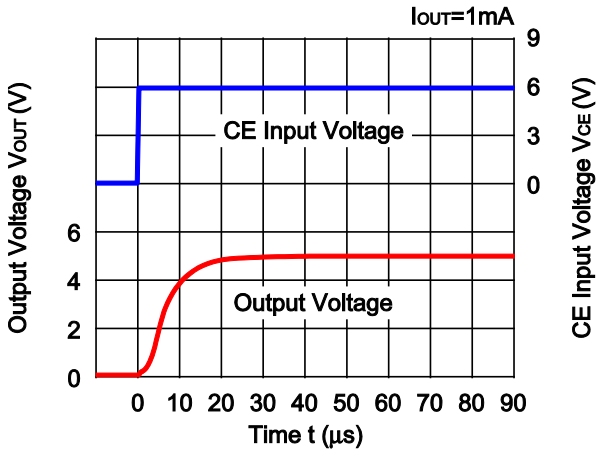

RP130x501x

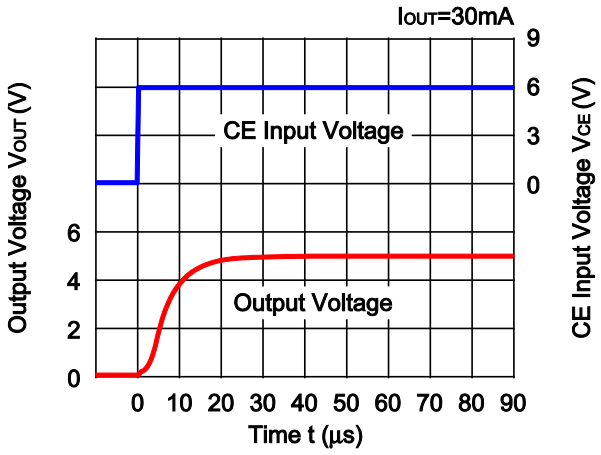

RP130x501x

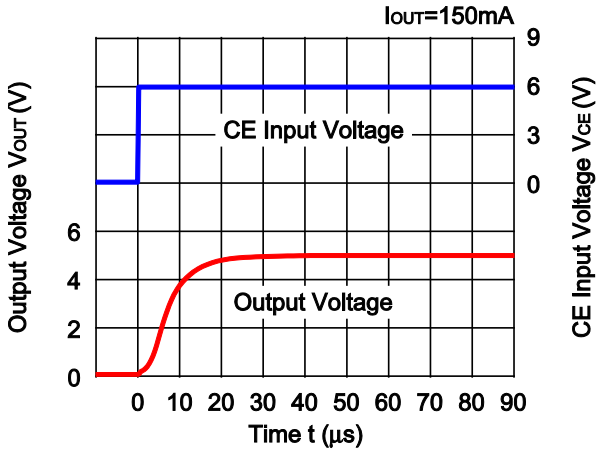

14) Fall Time with CE Pin in D-Version (C1 = C2 = 0.47µF, Ta = 25°C)

RP130x121D

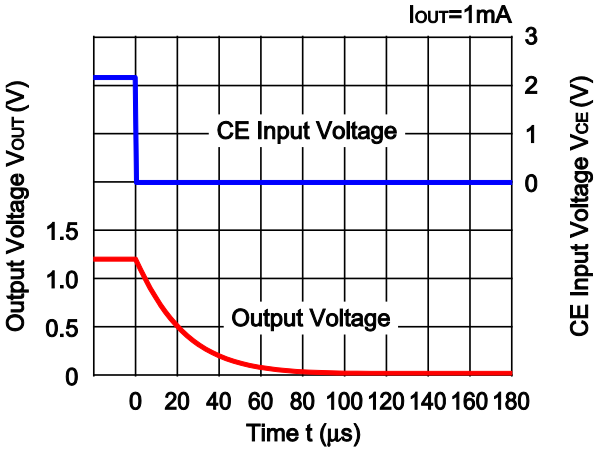

RP130x121D

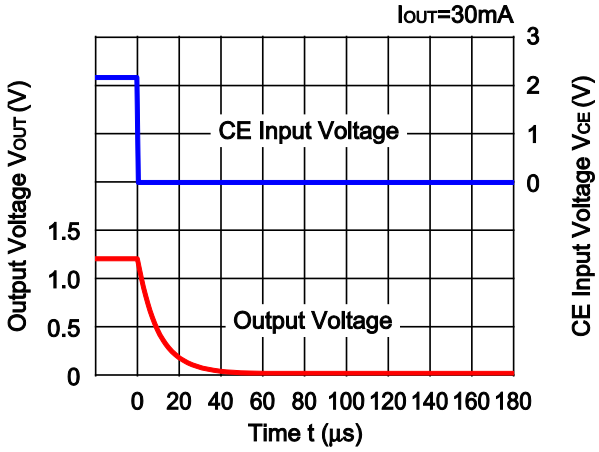

RP130x121D

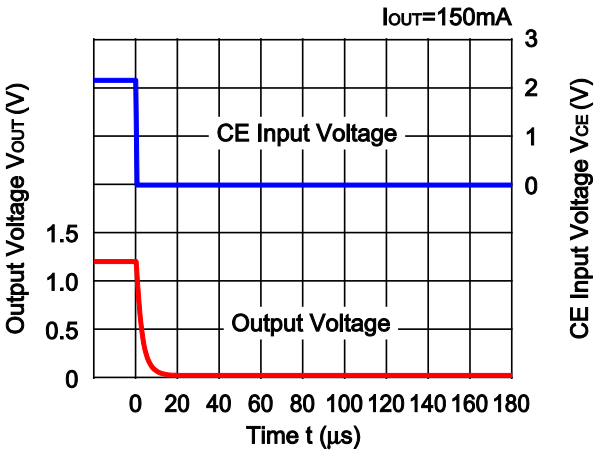

RP130x281D

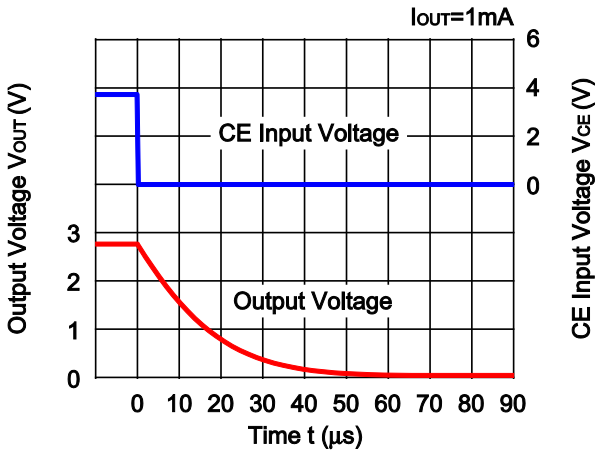

RP130x281D

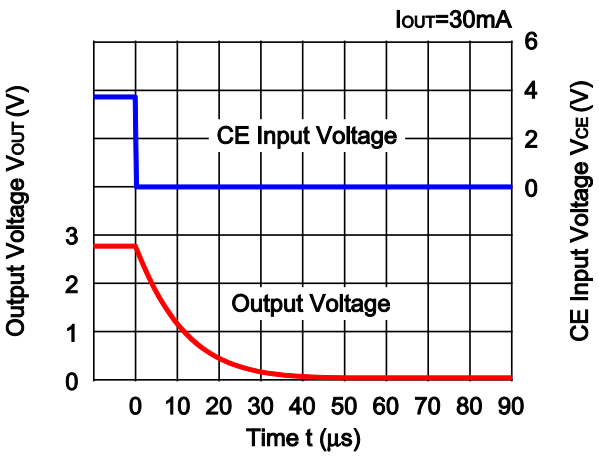

RP130x281D

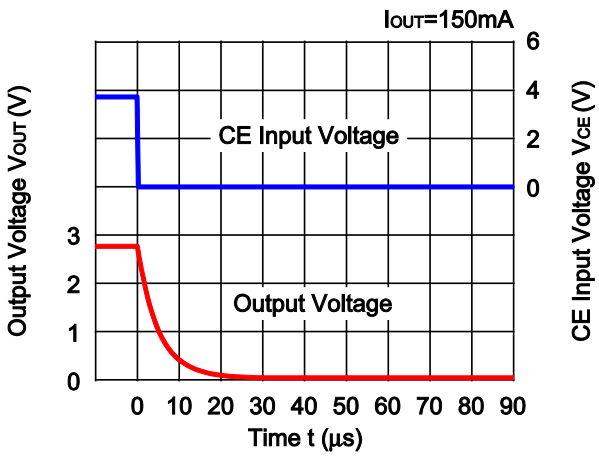

RP130x501D

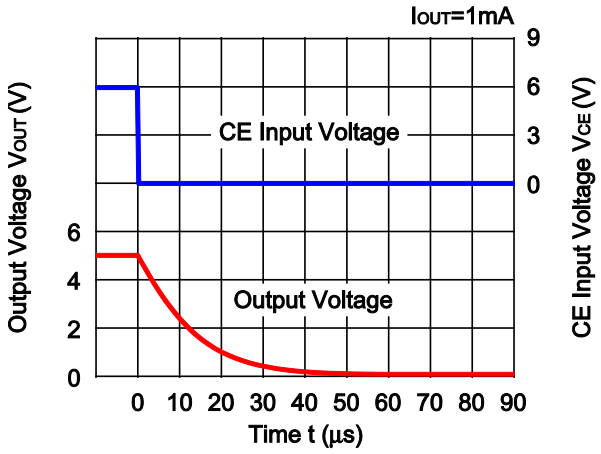

RP130x501D

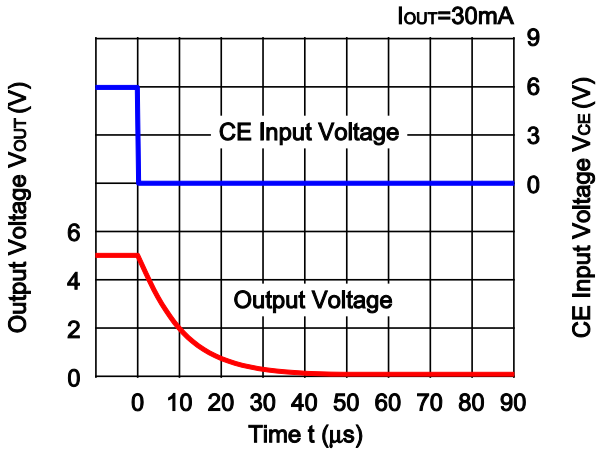

RP130x501D

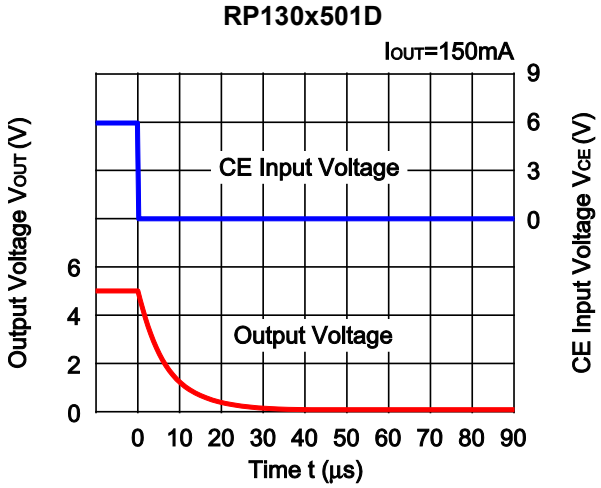

15) Minimum Operating Voltage (C1 = C2 = 0.47µF)

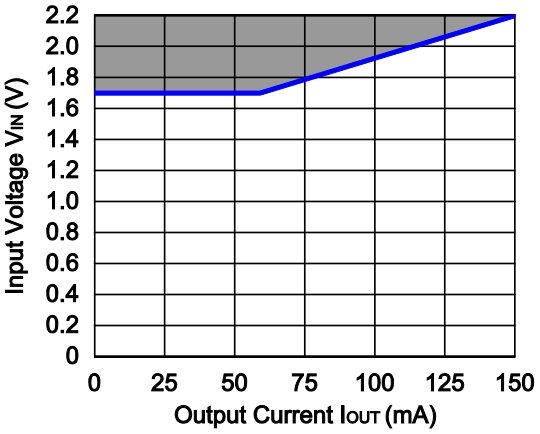

Hatched area is available for 1.2V output.

ESR vs. Output Current

The RP130x is recommended to use a ceramic type capacitor, but the RP130x can be used other capacitors of the lower ESR type. The relation between the output current (I_{OUT}) and the ESR of output capacitor is shown below.

Measurement conditions

Frequency Band: 10Hz to 3MHz
Measurement Temperature: − 40°C to 85°C
Hatched area: Noise level is 40μV (average) or below
Ceramic Capacitor: C1 = Ceramic 0.47μF, C2 = 0.47μF

RP130x121x

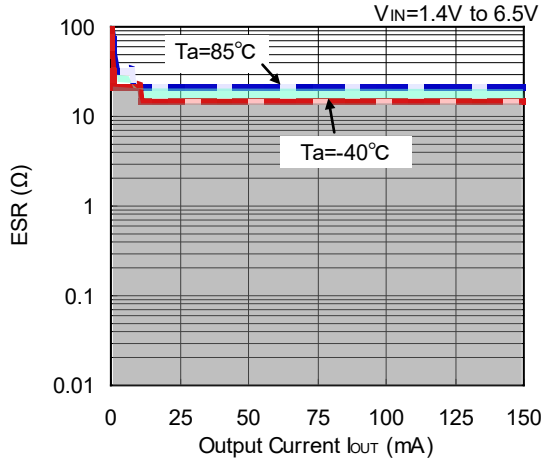

RP130x281x

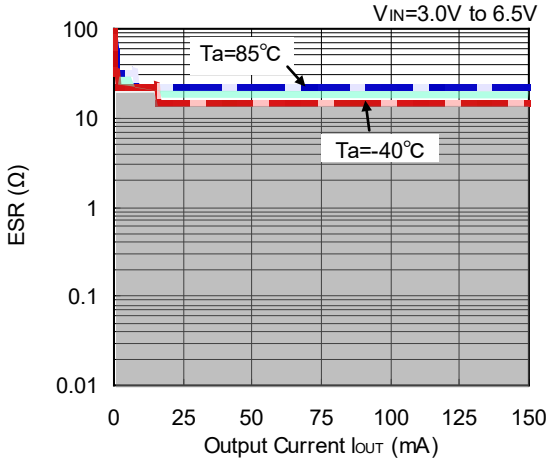

RP130x501x

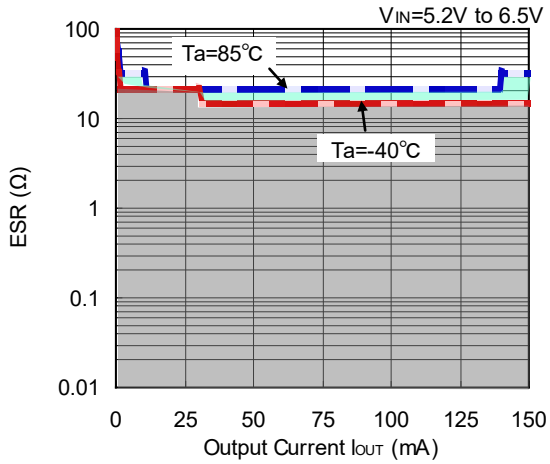

1. The products and the product specifications described in this document are subject to change or discontinuation of production without notice for reasons such as improvement. Therefore, before deciding to use the products, please refer to our sales representatives for the latest information thereon.
2. The materials in this document may not be copied or otherwise reproduced in whole or in part without the prior written consent of us.
3. This product and any technical information relating thereto are subject to complementary export controls (so-called KNOW controls) under the Foreign Exchange and Foreign Trade Law, and related politics ministerial ordinance of the law. (Note that the complementary export controls are inapplicable to any application-specific products, except rockets and pilotless aircraft, that are insusceptible to design or program changes.) Accordingly, when exporting or carrying abroad this product, follow the Foreign Exchange and Foreign Trade Control Law and its related regulations with respect to the complementary export controls.
4. The technical information described in this document shows typical characteristics and example application circuits for the products. The release of such information is not to be construed as a warranty of or a grant of license under our or any third party's intellectual property rights or any other rights.
5. The products listed in this document are intended and designed for use as general electronic components in standard applications (office equipment, telecommunication equipment, measuring instruments, consumer electronic products, amusement equipment etc.). Those customers intending to use a product in an application requiring extreme quality and reliability, for example, in a highly specific application where the failure or misoperation of the product could result in human injury or death should first contact us.
    - Aerospace Equipment
    - Equipment Used in the Deep Sea
    - Power Generator Control Equipment (nuclear, steam, hydraulic, etc.)
    - Life Maintenance Medical Equipment
    - Fire Alarms / Intruder Detectors
    - Vehicle Control Equipment (automotive, airplane, railroad, ship, etc.)
    - Various Safety Devices
    - Traffic control system
    - Combustion equipment

    In case your company desires to use this product for any applications other than general electronic equipment mentioned above, make sure to contact our company in advance. Note that the important requirements mentioned in this section are not applicable to cases where operation requirements such as application conditions are confirmed by our company in writing after consultation with your company.
6. We are making our continuous effort to improve the quality and reliability of our products, but semiconductor products are likely to fail with certain probability. In order to prevent any injury to persons or damages to property resulting from such failure, customers should be careful enough to incorporate safety measures in their design, such as redundancy feature, fire containment feature and fail-safe feature. We do not assume any liability or responsibility for any loss or damage arising from misuse or inappropriate use of the products.
7. The products have been designed and tested to function within controlled environmental conditions. Do not use products under conditions that deviate from methods or applications specified in this datasheet. Failure to employ the products in the proper applications can lead to deterioration, destruction or failure of the products. We shall not be responsible for any bodily injury, fires or accident, property damage or any consequential damages resulting from misuse or misapplication of the products.
8. Quality Warranty
    8-1. Quality Warranty Period
    In the case of a product purchased through an authorized distributor or directly from us, the warranty period for this product shall be one (1) year after delivery to your company. For defective products that occurred during this period, we will take the quality warranty measures described in section 8-2. However, if there is an agreement on the warranty period in the basic transaction agreement, quality assurance agreement, delivery specifications, etc., it shall be followed.
    8-2. Quality Warranty Remedies
    When it has been proved defective due to manufacturing factors as a result of defect analysis by us, we will either deliver a substitute for the defective product or refund the purchase price of the defective product.
    Note that such delivery or refund is sole and exclusive remedies to your company for the defective product.
    8-3. Remedies after Quality Warranty Period
    With respect to any defect of this product found after the quality warranty period, the defect will be analyzed by us. On the basis of the defect analysis results, the scope and amounts of damage shall be determined by mutual agreement of both parties. Then we will deal with upper limit in Section 8-2. This provision is not intended to limit any legal rights of your company.
9. Anti-radiation design is not implemented in the products described in this document.
10. The X-ray exposure can influence functions and characteristics of the products. Confirm the product functions and characteristics in the evaluation stage.
11. WLCSP products should be used in light shielded environments. The light exposure can influence functions and characteristics of the products under operation or storage.
12. Warning for handling Gallium and Arsenic (GaAs) products (Applying to GaAs MMIC, Photo Reflector). These products use Gallium (Ga) and Arsenic (As) which are specified as poisonous chemicals by law. For the prevention of a hazard, do not burn, destroy, or process chemically to make them as gas or power. When the product is disposed of, please follow the related regulation and do not mix this with general industrial waste or household waste.
13. Please contact our sales representatives should you have any questions or comments concerning the products or the technical information.

NISSHINBO

Nisshinbo Micro Devices Inc.

Official website
https://www.nisshinbo-microdevices.co.jp/en/

Purchase information
https://www.nisshinbo-microdevices.co.jp/en/buy/

ENTEGRECİ

Bu belge www.entegreci.com üzerinden sunulmaktadır.

Elektronik komponent tedarikinde Entegreci

Entegreci, Eskişehir merkezli, Türkiye geneline satış yapan bir elektronik komponent mağazasıdır. Entegreler (IC), mikrodenetleyiciler, transistörler, diyotlar, pasif elemanlar, konnektörler, modüller ve geliştirme kartları tek adetten seri üretim adetlerine kadar satılır. Ürün sayfalarında güncel stok durumunu, fiyatı ve datasheet bağlantısını bulabilirsiniz.

Parça koduyla arama

Üretici parça numarasını yazın; stok ve fiyatı hemen görün.

www.entegreci.com

Ürün kategorileri

Entegreden kapasitöre tüm elektronik komponent kategorileri.

Kategorilere göz atın

Üreticiler

Aradığınız üreticinin ürünlerini tek sayfada inceleyin.

Üreticileri görün

Toplu alım ve teklif

Listede olmayan ya da yüksek adetli parçalar için teklif isteyin.

Teklif isteyin

www.entegreci.com | **destek@entegreci.com** | **0850 305 90 34**

Entegreci is an online electronic components store based in Türkiye. Search by manufacturer part number to see stock, prices and datasheets for integrated circuits, microcontrollers, transistors, passive components and connectors, or request a quote for parts that are not listed.

Bu sayfa Entegreci tarafından eklenmiştir. Belgenin önceki sayfaları asıl yayıncısına aittir ve içeriği değiştirilmemiştir; en güncel sürüm için belgenin yayıncısına başvurun.