Low on Resistance / Low Voltage 1 A LDO for High Temperature Applications

NO.EA-343-240329

OUTLINE

The RP132x Series are voltage-regulators with a built-in low ON-resistance transistor and output current is 1A capability. These ICs have two versions: fixed output voltage type and externally adjustable output voltage type. The externally adjustable output voltage type is adjustable between 0.8V and 5.5V. The minimum input voltage can be set from 1.4V. Otherwise, the load regulation of RP132x has much improved when compared with conventional regulators. It is Typ.5mV at I_{OUT}=0.1mA to 1A.

Each of these ICs consists of a voltage reference unit, an error amplifier, a resistor net for setting output voltage, current limit circuits to prevent over-current and a thermal-shutdown circuit. A standby mode with ultra low supply current can be realized with the chip enable function.

The packages for these ICs are DFN(PL)1820-6, SOT-89-5, HSOP-6J, and TO-252-5-P2. They range from high-density mounting to ultra high wattage.

FEATURES

- Input Voltage Range (Maximum Rating) ..... 1.4V to 6.5V (7 V)
- Operating Temperature Range ..... −40°C to 105°C (※)
- Output Current ..... Min. 1A
- Supply Current ..... Typ. 65μA
- Standby Current ..... Typ. 0.15μA
- Output Voltage Range ..... Fixed Output Voltage Type:
  0.8V, 1.05V, 1.2V, 1.5V, 1.8V, 2.5V, 3.0V, 3.3V, 4.0V, 5.0V
  Contact our sales representatives for other voltages.
  Adjustable Output Voltage Type: 0.8V to 5.5V
- Dropout Voltage ..... Typ. 0.52V (V_{SET}=3.0V, I_{OUT}=1A)
- Ripple Rejection ..... Typ. 70dB (f=1kHz, V_{SET}=3.0V)
- Output Voltage Accuracy ..... ±1.0%
- Output Voltage Temperature-Drift Coefficient ..... Typ. ±60ppm/°C
- Line Regulation ..... Typ. 0.052%/V
- Load Regulation ..... Typ. 3mV at I_{OUT}=300mA, Typ. 5mV at I_{OUT}=1A
- Packages ..... DFN(PL)1820-6, SOT-89-5, HSOP-6J, TO-252-5-P2
- Inrush Current Limit Circuit ..... Typ. 500mA
  B/D version: Inrush current limit time is 500μs.
- Fold-Back Protection Circuit ..... Typ. 250mA (Current at short mode)
- Thermal Shutdown Circuit ..... Thermal Shutdown Temperature: Typ. 165°C
  Released Temperature: Typ. 95°C
- Auto Discharge Function ..... D version
- Ceramic capacitors are recommended to be used with this IC .... 2.2μF or more (V_{SET} ≤ 3.6V)
  4.7μF or more (V_{SET} > 3.6V)

※ This product is usable for the high-temperature applications since have passed a test at the high temperature. In addition, this product has a high-reliability since having passed our rigorous quality standards. To distinguish from the consumer products, “-Yx” is added at the end of the product name.

APPLICATIONS

- Industrial equipments such as FAs and smart meters
- Equipments used under high-temperature conditions

Equipments accompanied by self-heating

BLOCK DIAGRAMS

- **Fixed Output Voltage Type（HSOP-6J / SOT89-5）**

RP132Sxx1B / RP132Hxx1B

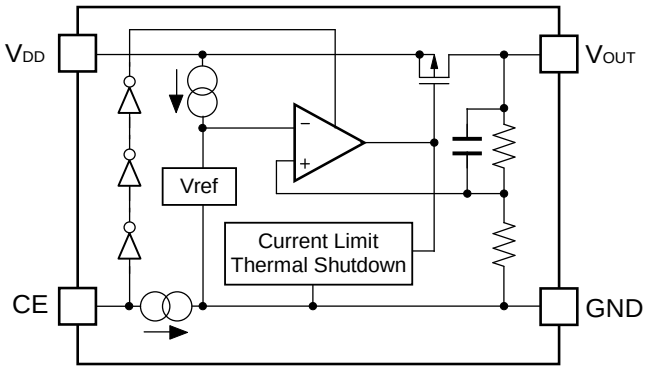

RP132Sxx1D / RP132Hxx1D

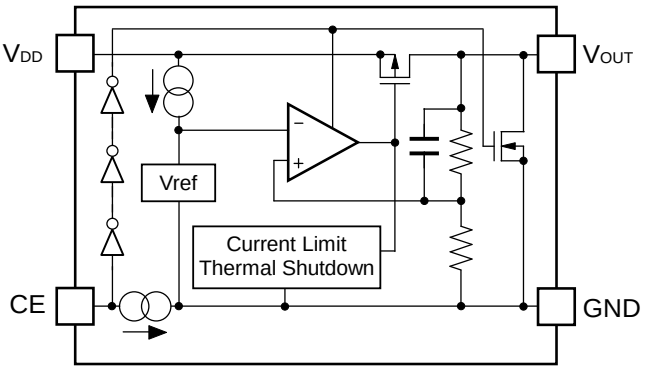

- **Fixed Output Voltage Type（TO-252-5-P2 / DFN(PL)1820-6）**

RP132Jxx1B / RP132Kxx1B

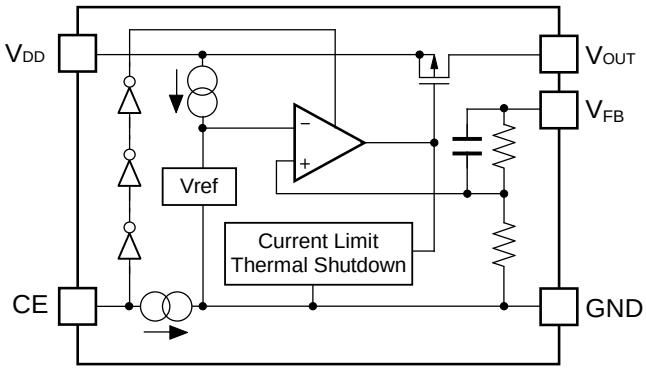

RP132Jxx1D / RP132Kxx1D

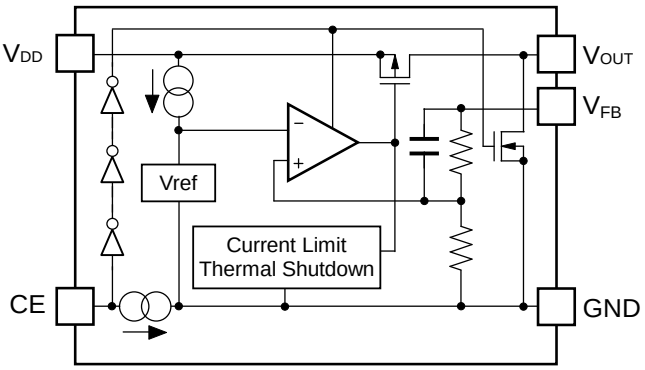

- **Adjustable Output Voltage Type（HSOP-6J / SOT-89-5 / TO-252-5-P2 / DFN(PL)1820-6）**

RP132S001B / RP132H001B /
RP132J001B / RP132K001B

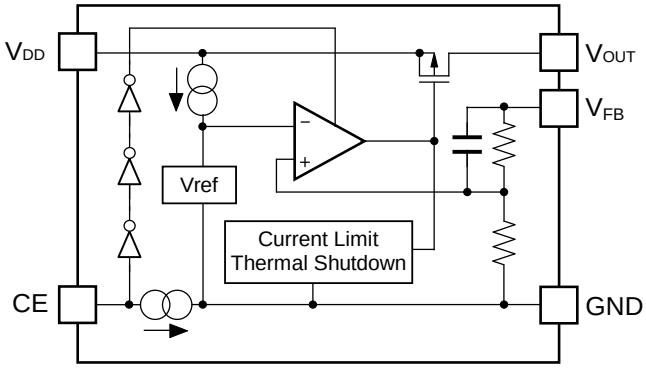

RP132S001D / RP132H001D
RP132J001D / RP132K001D

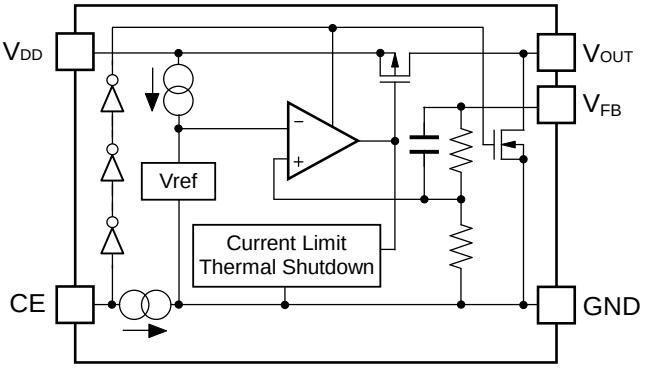

SELECTION GUIDE

The output voltage, the auto discharge function*, and the package type for the ICs can be selected at the user's request.

Product Name	Package	Quantity per Reel	Pb Free	Halogen Free
RP132K001∗-TR-Y	DFN(PL)1820-6	5,000 pcs	Yes	Yes
RP132Kxx1∗-TR-Y				
RP132H001∗-T1-YE	SOT-89-5	1,000 pcs	Yes	Yes
RP132Hxx1∗-T1-YE				
RP132S001∗-E2-YE	HSOP-6J	1,000 pcs	Yes	Yes
RP132Sxx1∗-E2-YE				
RP132J001∗-T1-YE	TO-252-5-P2	3,000 pcs	Yes	Yes
RP132Jxx1∗-T1-YE				

RP132x001x is the adjustable output voltage type.
xx: Specify the set output voltage (V_{SET}) of the fixed output voltage type.
0.8V(08), 1.2V(12), 1.5V(15), 1.8V(18), 2.5V(25), 3.0V(30), 3.3V(33), 4.0V(40), 5.0V(50)
1.05V(RP132x101x5)
Contact our sales representatives for other voltages.

∗: The auto discharge function at off state options are as follows.
(B) without auto discharge function* at off state
(D) with auto discharge function* at off state

* Auto-discharge function quickly lowers the output voltage to 0V, when the chip enable signal is switched from the active mode to the standby mode, by releasing the electrical charge accumulated in the external capacitor.

PIN DESCRIPTIONS

● DFN(PLP)1820-6

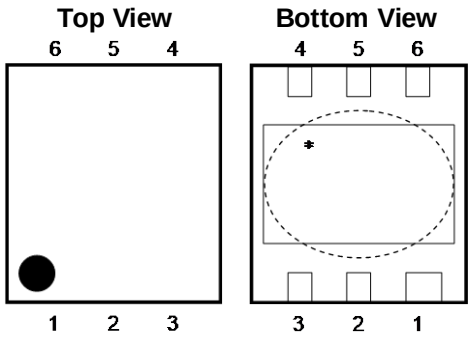

● SOT-89-5

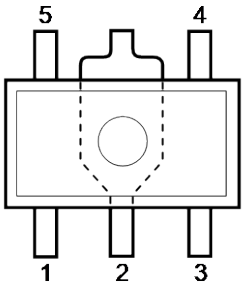

● HSOP-6J

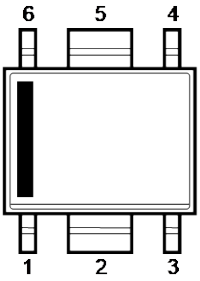

● TO-252-5-P2

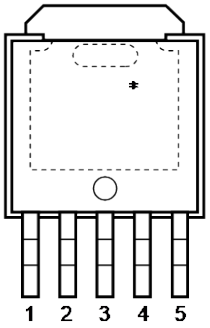

● **DFN(PL)1820-6**

Pin No.	Symbol	Pin Description
1	V_{OUT}	Output Pin
2	V_{FB}	Feed Back Pin
3	GND	Ground Pin
4	CE	Chip Enable Pin ("H" Active)
5	NC	No Connection
6	V_{DD}	Input Pin

∗) The tab on the bottom of the package enhances thermal performance and is electrically connected to GND (substrate level). It is recommended that the tab be connected to the ground plane on the board, or otherwise be left open.

When using Fixed Output Voltage Type (RP132Kxx1x),V_{OUT} pin and V_{FB} pin should be connected. When using Adjstable Output Voltage Type (RP132K001x), please follow *Notes on the Adjustable Output Voltage Type Settings*.

● **SOT-89-5**

Pin No.	Symbol	Pin Description
1	CE	Chip Enable Pin ("H" Active) (RP132Hxx1B/D)
	V_{FB}	Feed Back Pin (RP132H001B/D)
2	GND	Ground Pin
3	NC	No Connection (RP132Hxx1B/D)
	CE	Chip Enable Pin ("H" Active) (RP132H001B/D)
4	V_{DD}	Input Pin
5	V_{OUT}	Output Pin

When using Adjstable Output Voltage Type (RP132H001x), please follow *Notes on Adjustable Output Voltage Type Settings*.

- **HSOP-6J**

Pin No.	Symbol	Pin Description
1	V_{OUT}	Output Pin
2	GND	Ground Pin
3	NC	No Connection (RP132Sxx1B/D)
	V_{FB}	Feed Back Pin (RP132S001B/D)
4	CE	Chip Enable Pin ("H" Active)
5	GND	Ground Pin
6	V_{DD}	Input Pin

No. 2 pin and No .5 pin must be wired each other when mounted on boards. When using Adjstable Output Voltage Type (RP132S001x), please follow *Notes on Adjustable Output Voltage Type Settings*.

- **TO-252-5-P2**

Pin No.	Symbol	Pin Description
1	CE	Chip Enable Pin ("H" Active)
2	V_{DD}	Input Pin
3	GND	Ground Pin
4	V_{OUT}	Output Pin
5	V_{FB}	Feed Back Pin

∗) The tab on the bottom of the package enhances thermal performance and is electrically connected to GND (substrate level). It is recommended that the tab be connected to the ground plane on the board, or otherwise be left open.

When using Fixed Output Voltage Type (RP132Jxx1x),V_{OUT} pin and V_{FB} pin should be connected. When using Adjstable Output Voltage Type (RP132J001x), please follow *Notes on the Adjustable Output Voltage Type Settings*.

ABSOLUTE MAXIMUM RATINGS

Symbol	Item			Rating	Unit
V_{IN}	Input Voltage			7.0	V
V_{CE}	Input Voltage (CE Pin)			−0.3 to 7.0	V
V_{FB}	Input Voltage (V_{FB} Pin)			−0.3 to 7.0	V
V_{OUT}	Output Voltage			−0.3 to V_{IN}+0.3	V
P_D	Power Dissipation*	DFN(PL)1820-6	JEDEC STD. 51	2200	mV
		SOT-89-5	JEDEC STD. 51	2600	
		HSOP-6J	JEDEC STD. 51	2700	
		TO-252-5-P2	JEDEC STD. 51	3800	
Tj	Junction Temperature			−40 to 125	°C
Tstg	Storage Temperature Range			−55 to 125	°C

∗) Refer to *PACKAGE INFORMATION* for detailed information.

ABSOLUTE MAXIMUM RATINGS

Electronic and mechanical stress momentarily exceeded absolute maximum ratings may cause permanent damage and may degrade the life time and safety for both device and system using the device in the field. The functional operation at or over these absolute maximum ratings is not assured.

RECOMMENDED OPERATING CONDITIONS

Symbol	Item	Rating	Unit
V_{IN}	Input Voltage	1.4 to 6.5	V
Ta	Operating Temperature Range	−40 to 105	°C

RECOMMENDED OPERATING CONDITIONS

All of electronic equipment should be designed that the mounted semiconductor devices operate within the recommended operating conditions. The semiconductor devices cannot operate normally over the recommended operating conditions, even if they are used over such conditions by momentary electronic noise or surge. And the semiconductor devices may receive serious damage when they continue to operate over the recommended operating conditions.

ELECTRICAL CHARACTERISTICS

V_{IN}=V_{SET}+1.0V, I_{OUT}=1mA, C_{IN}=2.2µF, C_{OUT}=2.2µF(V_{SET} ≤ 3.6V), 4.7µF(V_{SET} > 3.6V), unless otherwise noted.
The specifications surrounded by ☐ are guaranteed by design engineering at −40°C ≤Ta≤ 105°C.

- **RP132xxxxB/D (Fixed Output Voltage Type)** (Ta=25°C)

Symbol	Item	Conditions		Min.	Typ.	Max.	Unit
V_{OUT}	Output Voltage	Ta=25°C	V_{SET} > 1.5V	×0.99		×1.01	V
			V_{SET} ≤ 1.5V	−15		15	mV
		−40°C ≤ Ta ≤ 105°C	V_{SET} > 1.5V	☐×0.981		☐×1.019	V
			V_{SET} ≤ 1.5V	☐−29		☐29	mV
I_{LIM}	Output Current Limit			☐1			A
ΔV_{OUT}/ ΔI_{OUT}	Load Regulation	0.1mA ≤ I_{OUT} ≤ 300mA			3	☐20	mV
		0.1mA ≤ I_{OUT} ≤ 1A			5	☐60	
V_{DIF}	Dropout Voltage	Refer to the *Product-specific Electrical Characteristics*					
I_{SS}	Supply Current	I_{OUT}=0mA (V_{IN}=6.5V)			65	☐85	µA
Istandby	Standby Current	V_{CE}=0V, V_{IN}=6.5V			0.15	0.6	µA
ΔV_{OUT}/ ΔV_{IN}	Line Regulation	V_{SET}+0.5V ≤ V_{IN} ≤ 6.5V ∗ However, V_{IN} ≥1.6V			0.05	☐0.10	%/V
I_{SC}	Short Current Limit	V_{OUT}=0V			250		mA
I_{PD}	CE Pull-down Current				0.3	☐0.7	µA
V_{CEH}	CE Input Voltage "H"			☐1.0			V
V_{CEL}	CE Input Voltage "L"					☐0.4	V
T_{TSD}	Thermal Shutdown Detection Temperature	Junction Temperature			165		°C
T_{TSR}	Thermal Shutdown Released Temperature	Junction Temperature			95		°C
R_{LOW}	Low Output Nch Tr. ON Resistance (D version)	V_{IN}=4.0V, V_{CE}=0V			50		Ω

All test items listed under Electrical Characteristics are done under the pulse load condition (Tj≈Ta=25ºC) except for Dropout Voltage at 1A Output Current and Load Regulation.

The specifications surrounded by ☐ are guaranteed by design engineering at −40°C ≤Ta≤ 105°C.

RP132xxxxB/D (Fixed Output Voltage Type) Product-specific Electrical Characteristics (Ta = 25°C)

Product Name	V_{OUT} [V] (Ta = 25°C)			V_{OUT} [V] (Ta = -40 to 105°C)			V_{DIF} [V] (I_{OUT} = 300 mA)		V_{DIF} [V] (I_{OUT} = 1 A)	
	MIN.	TYP.	MAX.	MIN.	TYP.	MAX.	TYP.	MAX.	TYP.	MAX.
RP132x08xx	0.785	0.800	0.815	0.771	0.800	0.829	0.670	0.890	1.200	1.540
RP132x12xx	1.185	1.200	1.215	1.171	1.200	1.229	0.360	0.540	0.900	1.230
RP132x15xx	1.485	1.500	1.515	1.471	1.500	1.529	0.240	0.330	0.780	1.050
RP132x18xx	1.782	1.800	1.818	1.766	1.800	1.834				
RP132x25xx	2.475	2.500	2.525	2.453	2.500	2.548				
RP132x30xx	2.970	3.000	3.030	2.943	3.000	3.057	0.150	0.210	0.520	0.720
RP132x33xx	3.267	3.300	3.333	3.237	3.300	3.363	0.130	0.180	0.460	0.680
RP132x40xx	3.960	4.000	4.040	3.924	4.000	4.076				
RP132x50xx	4.950	5.000	5.050	4.905	5.000	5.095				
RP132x10xx5	1.035	1.050	1.065	1.021	1.050	1.079	0.51	0.73	1.05	1.39

V_{IN}= V_{SET} +1.0V, I_{OUT}=1mA, C_{IN}=2.2µF, C_{OUT}=2.2µF(V_{SET} ≤ 3.6V), 4.7µF(V_{SET} > 3.6V), unless otherwise noted.
The specifications surrounded by [ ] are guaranteed by design engineering at −40°C ≤Ta ≤ 105°C

- **RP132x001B/D (Adjustable Output Voltage Type)** (Ta=25°C)

Symbol	Item	Conditions		Min.	Typ.	Max.	Unit
V_{FB}	Feedback Voltage	Ta=25°C	V_{OUT}=V_{FB}	0.785	0.800	0.815	V
		−40°C ≤ Ta ≤ 105°C		[0.771]		[0.829]	
V_{OUT}	Output Voltage Adjusting Range			0.8		5.5	V
I_{LIM}	Output Current Limit	V_{OUT}=V_{FB}		[1]			A
ΔV_{OUT}/ ΔI_{OUT}	Load Regulation	0.1mA ≤ I_{OUT} ≤ 300mA			3	[20]	mV
		0.1mA ≤ I_{OUT} ≤ 1A			5	[60]	
V_{DIF}	Dropout Voltage	V_{OUT}=V_{FB}	I_{OUT}=300mA		0.67	[0.89]	V
			I_{OUT}=1A		1.20	[1.54]	
I_{SS}	Supply Current	V_{OUT}=V_{FB}, I_{OUT}=0mA (V_{IN}=6.5V)			65	[85]	µA
Istandby	Standby Current	V_{CE}=0V, V_{IN}=6.5V			0.15	0.6	µA
ΔV_{OUT}/ ΔV_{IN}	Line Regulation	V_{OUT}=V_{FB}, 1.6V ≤ V_{IN} ≤ 6.5V			0.05	[0.10]	%/V
I_{SC}	Short Current Limit	V_{OUT}=V_{FB}=0V			250		mA
I_{PD}	CE Pull-down Current				0.3	[0.7]	µA
V_{CEH}	CE Input Voltage "H"			[1.0]			V
V_{CEL}	CE Input Voltage "L"					[0.4]	V
T_{TSD}	Thermal Shutdown Detection Temperature	Junction Temperature			165		°C
T_{TSR}	Thermal Shutdown Released Temperature	Junction Temperature			95		°C
R_{LOW}	Low Output Nch Tr. ON Resistance (D version)	V_{IN}=4.0V, V_{CE}=0V			50		Ω

All test items listed under Electrical Characteristics are done under the pulse load condition (Tj≈Ta=25°C) except for Dropout Voltage at 1A Output Current and Load Regulation.

TYPICAL APPLICATION

Fixed Output Voltage Type (HSOP-6J/ SOT89-5)

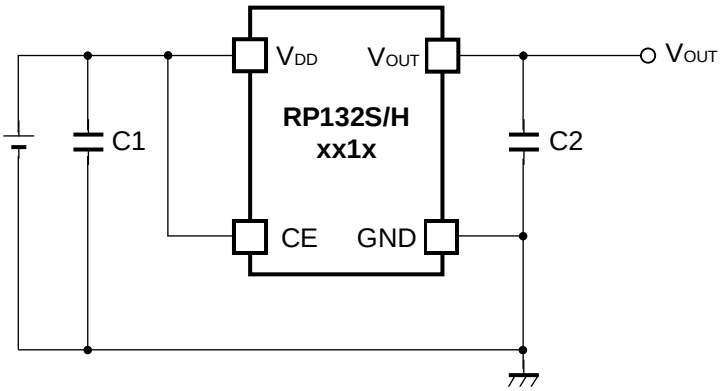

Fixed Output Voltage Type (TO-252-5-P2 / DFN(PL)1820-6)

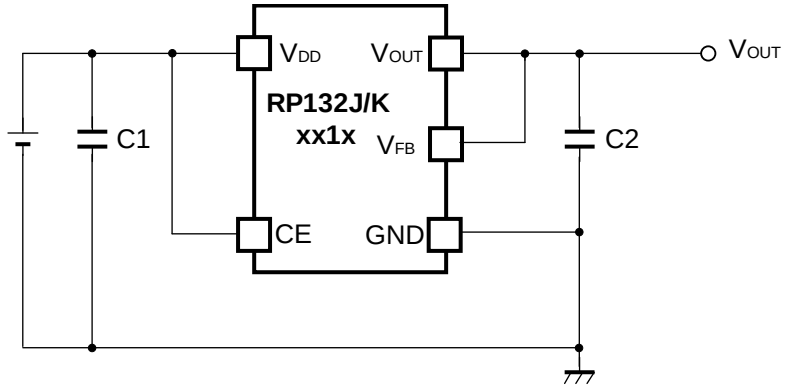

Adjustable Output Voltage Type (HSOP-6J / SOT89-5/ TO-252-5-P2 / DFN(PL)1820-6)

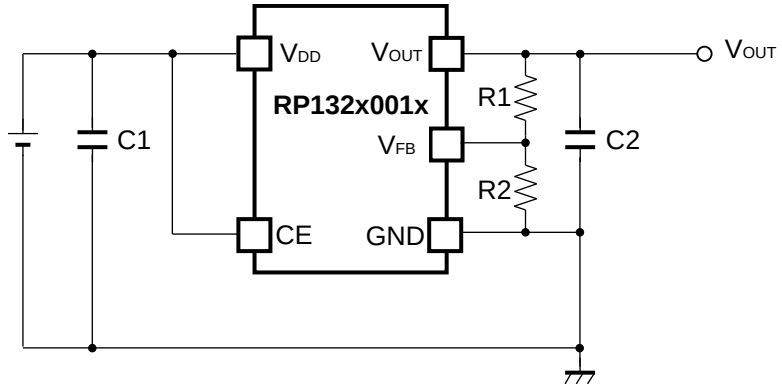

TECHNICAL NOTES

Phase Compensation

In these ICs, phase compensation is made for securing stable operation even if the load current is varied. For this purpose, use a capacitor C2 with good frequency characteristics and ESR (Equivalent Series Resistance).

If a tantalum capacitor is used, and its ESR of C2 is large, the loop oscillation may result. Because of this, select C2 carefully considering its frequency characteristics.

Recommended value of the external capacitors

V_{OUT}	Capacitors	
$V_{SET} \leq 3.6V$	C1	2.2μF
	C2	2.2μF
$V_{SET} > 3.6V$	C1	2.2μF
	C2	4.7μF

Please refer to *Technical Notes on Adjustable Output Voltage Type* when using R1 and R2 as output capacitors.

PCB Layout

Make V_{DD} and GND lines sufficient. If their impedance is high, noise pickup or unstable operation may result. Connect a capacitor C1 between V_{DD} and GND pin with a capacitance value as "Recommendation value of the external capacitors" above or more, and as close as possible to the pins.

Set external components, especially the output capacitor C2, as close as possible to the ICs, and make wiring as short as possible.

Transient Response

When using the Adjustable Output Voltage Type, the transient response could be affected by the external resistors. Evaluate the circuit taking the actual conditions of use into account.

TYPICAL APPLICATION FOR IC CHIP BREAKDOWN PREVENTION

Fixed Output Voltage Type (HSOP-6J / SOT89-5)

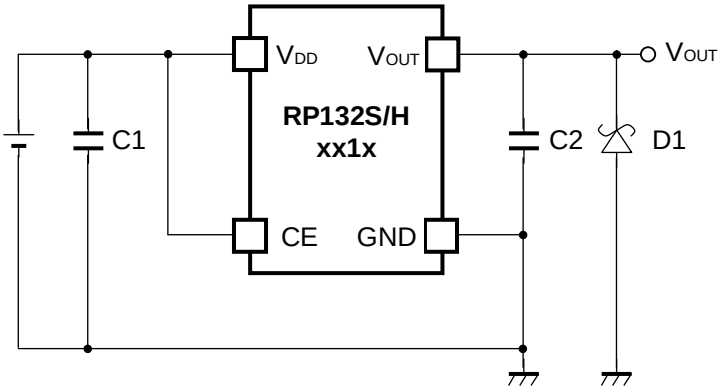

Fixed Output Voltage Type (TO-252-5-P2 / DFN(PL)1820-6)

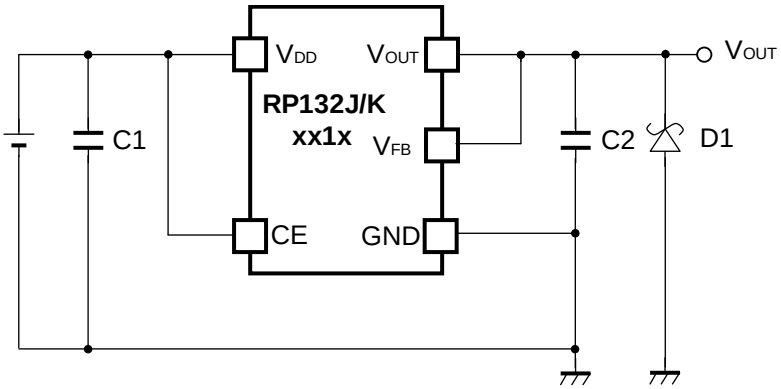

Adjustable Output Voltage Type (HSOP-6J / SOT89-5 / TO-252-5-P2 / DFN(PL)1820-6)

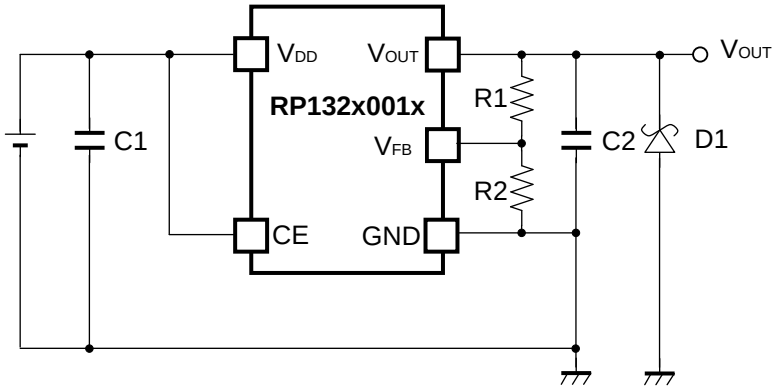

When a sudden surge of electrical current travels along the V_{OUT} pin and GND due to a short-circuit, electrical resonance of a circuit involving an output capacitor (C2) and a short circuit inductor generates a negative voltage and may damage the device or the load devices. Connecting a schottky diode (D1) between the V_{OUT} pin and GND has the effect of preventing damage to them.

Adjustable Output Voltage Type Settings

Output Voltage Setting Method

Adjustable Output Voltage Type can be adjusted the output voltage up to 5.5V by using the external divider resistors. Also, please use 16kΩ or less for R2 resistor.

If the V_{FB} voltage is described as $setV_{FB}$, the output voltage can be set by using the following equations

$SetV_{FB}$ is equal to 0.8V. The V_{OUT} pin of Adjustable Output Voltage Type should be connected to the V_{FB} pin.

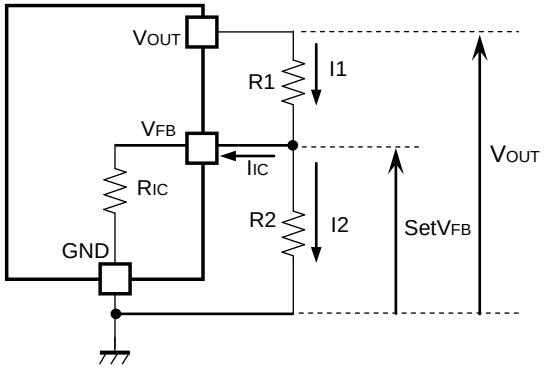

$I1 = I_{IC} + I2$ ..... (1)

$I2 = setV_{FB} / R2$ ..... (2)

Thus,

$I1 = I_{IC} + setV_{FB} / R2$ ..... (3)

Therefore,

$V_{OUT} = setV_{FB} \times R1 \times I1$ ..... (4)

Put Equation (3) into Equation (4), then

$V_{OUT} = setV_{FB} + R1 (I_{IC} + setV_{FB} / R2)$

$= setV_{FB} \times (1+R1/ R2) + R1 \times I_{IC}$ ..... (5)

In Equation (5), R1x I_{IC} is the error-causing factor in V_{OUT}.

As for I_{IC},

$I_{IC} = setV_{FB} / R_{IC}$ ..... (6)

Therefore, the error-causing factor R1x I_{IC} can be described as follows.

$R1 \times I_{IC} = R1 \times setV_{FB} / R_{IC}$

$= setV_{FB} \times R1 / R_{IC}$ ..... (7)

For better accuracy, choosing R1 ($<<R_{IC}$) reduces this error.

Without the error-causing factor R1x I_{IC}, the output voltage can be calculated by the following equation

$V_{OUT} = setV_{FB} \times ((R1 + R2) / R2)$ ..... (8)

R_{IC} of RP132x is approximately Typ.1.3MΩ (Ta=25°C, this value is guaranteed by design).

The value could be affected by the temperature, therefore evaluate the circuit taking the actual conditions of use into account.

Inrush Current Limit Time Settings

The RP132x Series include the circuit which can limit the inrush current at start-up to 500mA or less. The current limit time of B/D version is fixed internally as approximately Typ.500μs.

Please note that during the inrush current limit time, the load current cannot be more than the limited current.

PACKAGE INFORMATION

POWER DISSIPATION (DFN(PL)1820-6)

The power dissipation of the package is dependent on PCB material, layout, and environmental conditions. The following measurement conditions are based on JEDEC STD. 51-7.

Measurement Conditions

Item	Measurement Conditions
Environment	Mounting on Board (Wind Velocity = 0 m/s)
Board Material	Glass Cloth Epoxy Plastic (Four-Layer Board)
Board Dimensions	76.2 mm × 114.3 mm × 0.8 mm
Copper Ratio	Outer Layer (First Layer): Less than 95% of 50 mm Square Inner Layers (Second and Third Layers): Approx. 100% of 50 mm Square Outer Layer (Fourth Layer): Approx. 100% of 50 mm Square
Through-holes	ϕ 0.2 mm × 36 pcs

Measurement Result (Ta = 25°C, Tjmax = 125°C)

Item	Measurement Result
Power Dissipation	2200 mW
Thermal Resistance (θja)	θja = 45°C/W
Thermal Characterization Parameter (ψjt)	ψjt = 18°C/W

θja: Junction-to–ambient thermal resistance.

ψjt: Junction–to-top of package thermal characterization parameter.

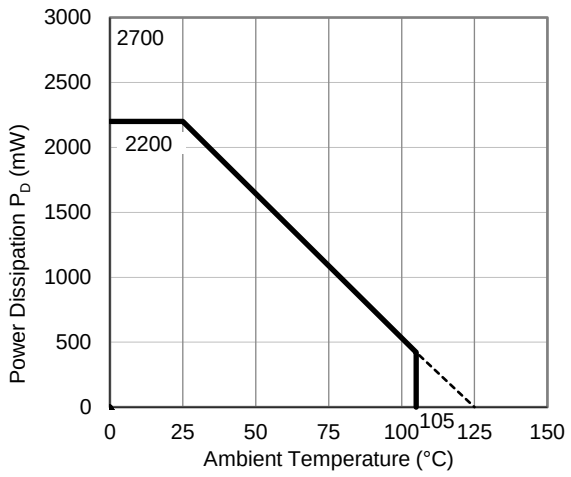

Power Dissipation vs. Ambient Temperature

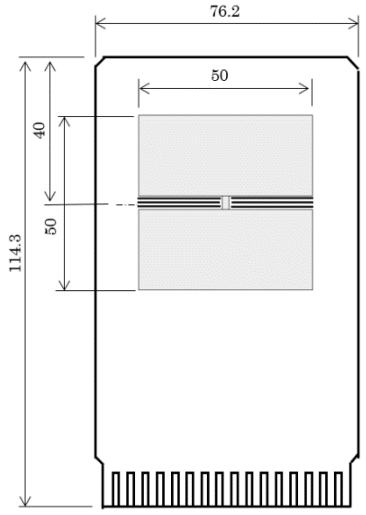

Measurement Board Pattern

PACKAGE DIMENSIONS (DFN(PL)1820-6)

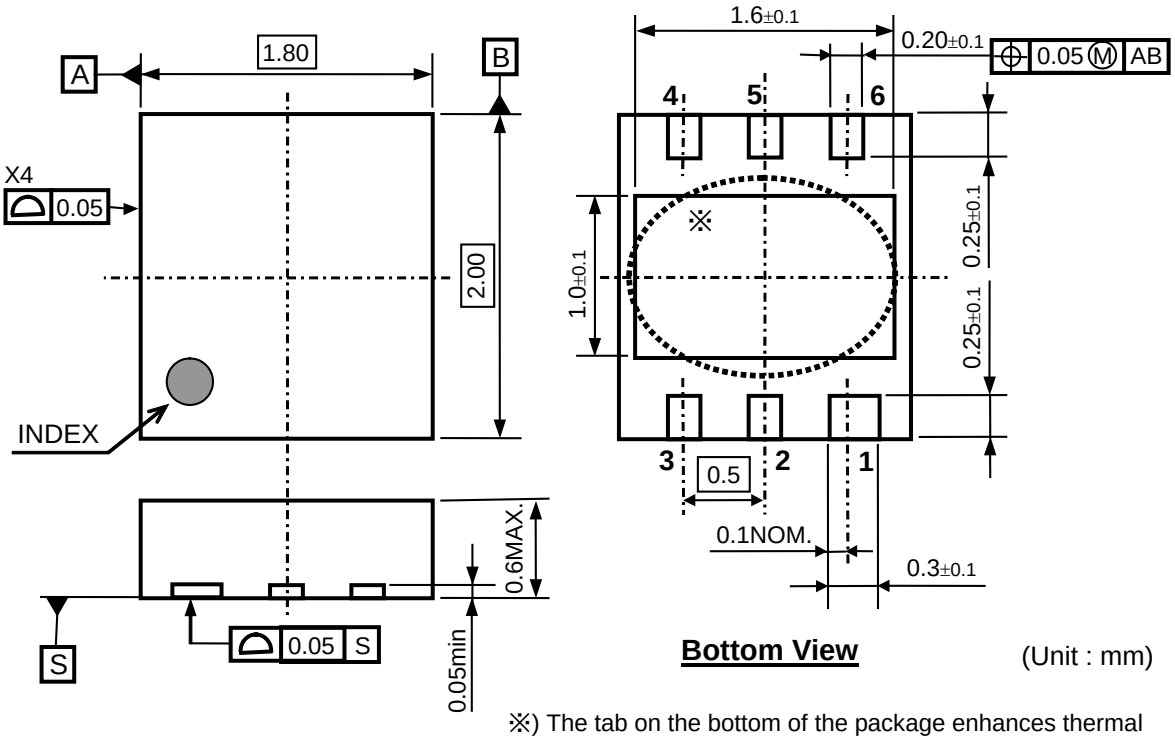

※) The tab on the bottom of the package enhances thermal performance and is electrically connected to GND (substrate level). It is recommended that the tab be connected to the ground plane on the board, or otherwise be left floating.

DFN(PL)1820-6 Package Dimensions

MARK SPECIFICATION (DFN(PL)1820-6)

①②③④: Product Code … **Refer to *MARK SPECIFICATION TABLE (DFN(PL)1820-6)***

⑤⑥: Lot Number … Alphanumeric Serial Number

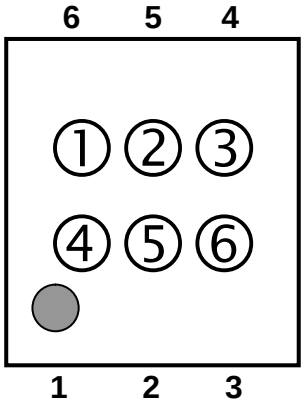

DFN(PL)1820-6 Mark Specification

NOTICE
There can be variation in the marking when different AOI (Automated Optical Inspection) equipment is used. In the case of recognizing the marking characteristic with AOI, please contact our sales or our distributor before attempting to use AOI.

MARK SPECIFICATION TABLE (DFN(PL)1820-6)

RP132Kxx1B

Product Name	① ② ③ ④	V_{SET}
RP132K081B	C X 0 8	0.8V
RP132K121B	C X 1 2	1.2V
RP132K151B	C X 1 5	1.5V
RP132K181B	C X 1 8	1.8V
RP132K251B	C X 2 5	2.5V
RP132K301B	C X 3 0	3.0V
RP132K331B	C X 3 3	3.3V
RP132K401B	C X 4 0	4.0V
RP132K501B	C X 5 0	5.0V
RP132K101B5	C X 0 4	1.05V

RP132Kxx1D

Product Name	① ② ③ ④	V_{SET}
RP132K081D	C Y 0 8	0.8V
RP132K121D	C Y 1 2	1.2V
RP132K151D	C Y 1 5	1.5V
RP132K181D	C Y 1 8	1.8V
RP132K251D	C Y 2 5	2.5V
RP132K301D	C Y 3 0	3.0V
RP132K331D	C Y 3 3	3.3V
RP132K401D	C Y 4 0	4.0V
RP132K501D	C Y 5 0	5.0V
RP132K101D5	C Y 0 4	1.05V

RP132K001B (Adjustable Output Voltage Type)

Product Name	① ② ③ ④	V_{SET}
RP132K001B	C X 0 0	-

RP132K001D (Adjustable Output Voltage Type)

Product Name	① ② ③ ④	V_{SET}
RP132H001D	C Y 0 0	-

POWER DISSIPATION (SOT-89-5)

The power dissipation of the package is dependent on PCB material, layout, and environmental conditions. The following measurement conditions are based on JEDEC STD. 51-7.

Measurement Conditions

Item	Measurement Conditions
Environment	Mounting on Board (Wind Velocity = 0 m/s)
Board Material	Glass Cloth Epoxy Plastic (Four-Layer Board)
Board Dimensions	76.2 mm × 114.3 mm × 0.8 mm
Copper Ratio	Outer Layer (First Layer): Less than 95% of 50 mm Square Inner Layers (Second and Third Layers): Approx. 100% of 50 mm Square Outer Layer (Fourth Layer): Approx. 100% of 50 mm Square
Through-holes	ϕ 0.3 mm × 13 pcs

Measurement Result (Ta = 25°C, Tjmax = 125°C)

Item	Measurement Result
Power Dissipation	2600 mW
Thermal Resistance (θja)	θja = 38°C/W
Thermal Characterization Parameter (ψjt)	ψjt = 13°C/W

θja: Junction-to-Ambient Thermal Resistance

ψjt: Junction-to-Top Thermal Characterization Parameter

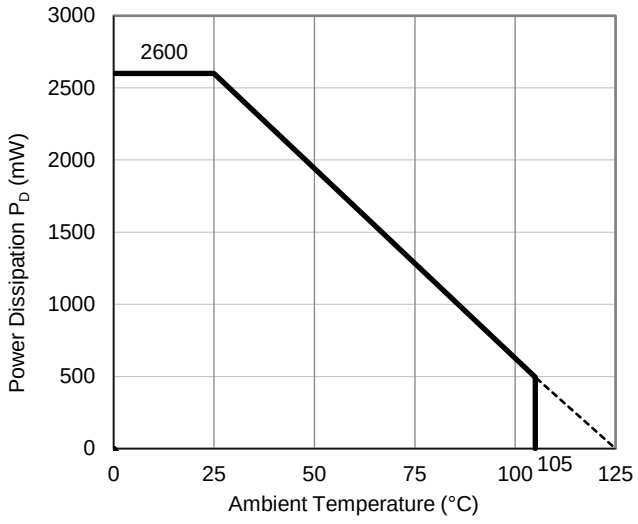

Power Dissipation vs. Ambient Temperature

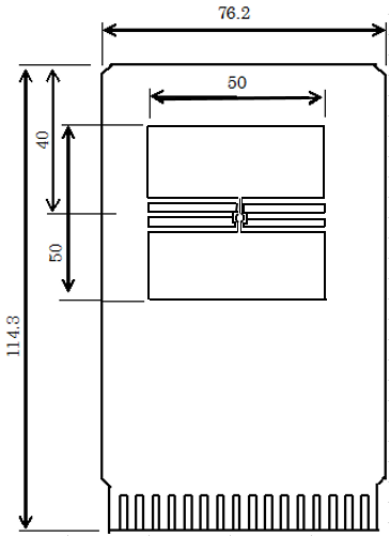

Measurement Board Pattern

PACKAGE DIMENSIONS (SOT-89-5)

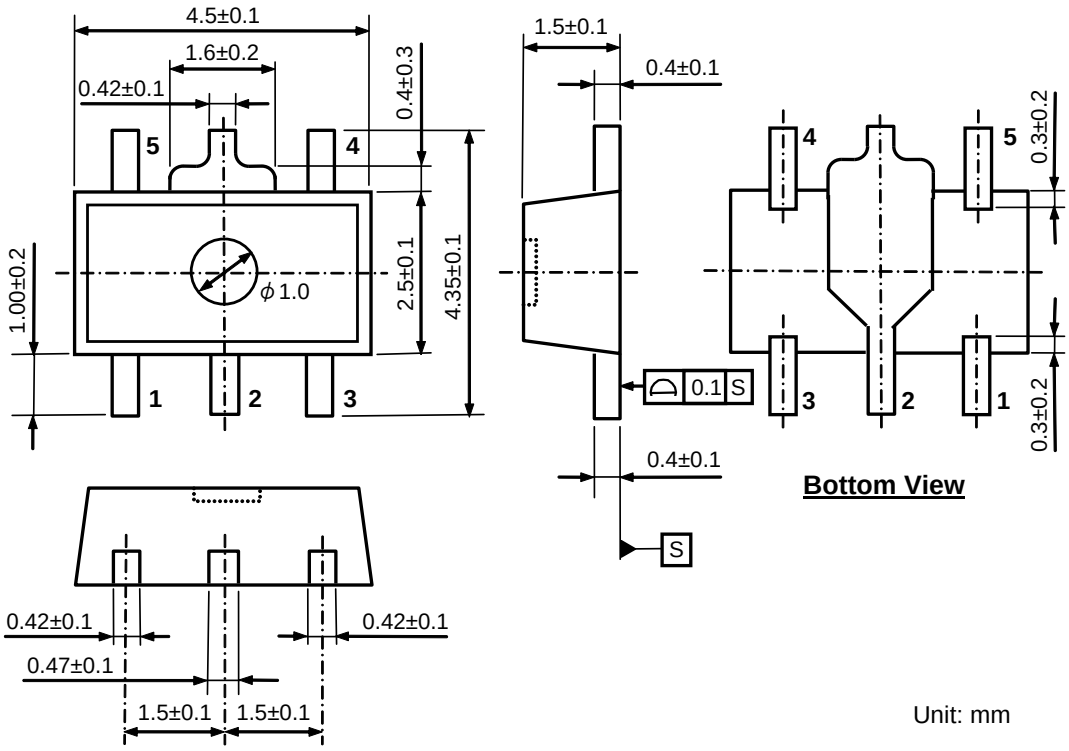

SOT-89-5 Package Dimensions

MARK SPECIFICATION (SOT-89-5)

①②③④: Product Code … **Refer to *MARK SPECIFICATION TABLE (SOT-89-5)***

⑤⑥: Lot Number … Alphanumeric Serial Number

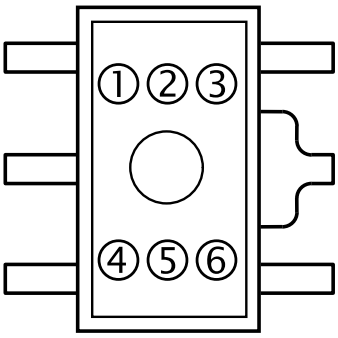

SOT-89-5 Mark Specification

NOTICE
There can be variation in the marking when different AOI (Automated Optical Inspection) equipment is used. In the case of recognizing the marking characteristic with AOI, please contact our sales or our distributor before attempting to use AOI.

MARK SPECIFICATION TABLE (SOT-89-5)

RP132Hxx1B

Product Name	① ② ③ ④	V_{SET}
RP132H081B	C 0 8 B	0.8V
RP132H121B	C 1 2 B	1.2V
RP132H151B	C 1 5 B	1.5V
RP132H181B	C 1 8 B	1.8V
RP132H251B	C 2 5 B	2.5V
RP132H301B	C 3 0 B	3.0V
RP132H331B	C 3 3 B	3.3V
RP132H401B	C 4 0 B	4.0V
RP132H501B	C 5 0 B	5.0V
RP132H101B5	C 0 4 B	1.05V

RP132Hxx1D

Product Name	① ② ③ ④	V_{SET}
RP132H081D	C 0 8 D	0.8V
RP132H121D	C 1 2 D	1.2V
RP132H151D	C 1 5 D	1.5V
RP132H181D	C 1 8 D	1.8V
RP132H251D	C 2 5 D	2.5V
RP132H301D	C 3 0 D	3.0V
RP132H331D	C 3 3 D	3.3V
RP132H401D	C 4 0 D	4.0V
RP132H501D	C 5 0 D	5.0V
RP132H101D5	C 0 4 D	1.05V

RP132H001B (Adjustable Output Voltage Type)

Product Name	① ② ③ ④	V_{SET}
RP132H001B	C 0 0 B	-

RP132H001D (Adjustable Output Voltage Type)

Product Name	① ② ③ ④	V_{SET}
RP132H001D	C 0 0 D	-

POWER DISSIPATION (HSOP-6J)

The power dissipation of the package is dependent on PCB material, layout, and environmental conditions. The following measurement conditions are based on JEDEC STD. 51-7.

Measurement Conditions

Item	Measurement Conditions
Environment	Mounting on Board (Wind Velocity = 0 m/s)
Board Material	Glass Cloth Epoxy Plastic (Four-Layer Board)
Board Dimensions	76.2 mm × 114.3 mm × 0.8 mm
Copper Ratio	Outer Layer (First Layer): Less than 95% of 50 mm Square Inner Layers (Second and Third Layers): Approx. 100% of 50 mm Square Outer Layer (Fourth Layer): Approx. 100% of 50 mm Square
Through-holes	ϕ 0.3 mm × 28 pcs

Measurement Result (Ta = 25°C, Tjmax = 125°C)

Item	Measurement Result
Power Dissipation	2700 mW
Thermal Resistance (θja)	θja = 37°C/W
Thermal Characterization Parameter (ψjt)	ψjt = 7°C/W

θja: Junction-to-Ambient Thermal Resistance

ψjt: Junction-to-Top Thermal Characterization Parameter

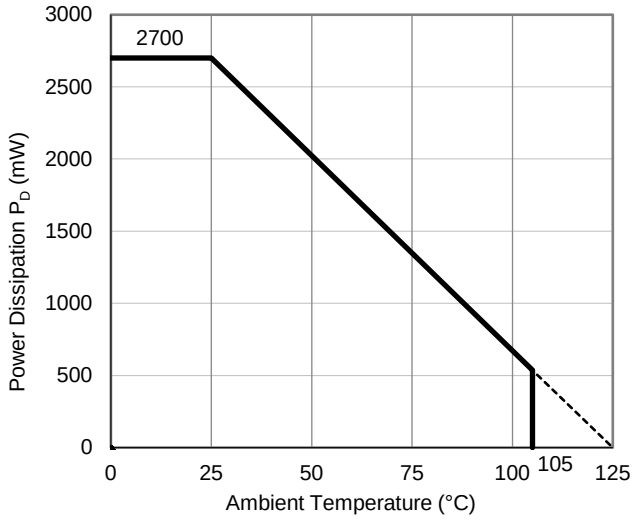

Power Dissipation vs. Ambient Temperature

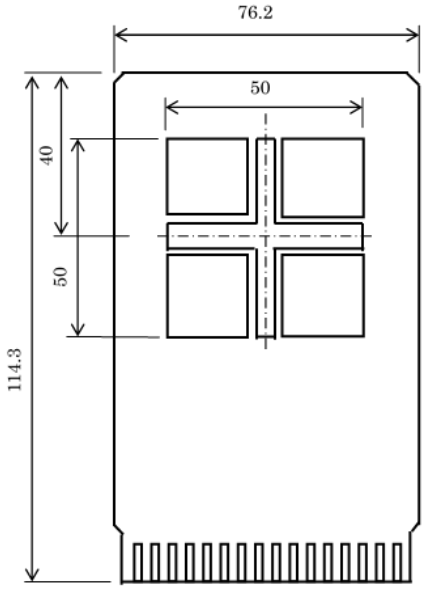

Measurement Board Pattern

PACKAGE DIMENSIONS (HSOP-6J)

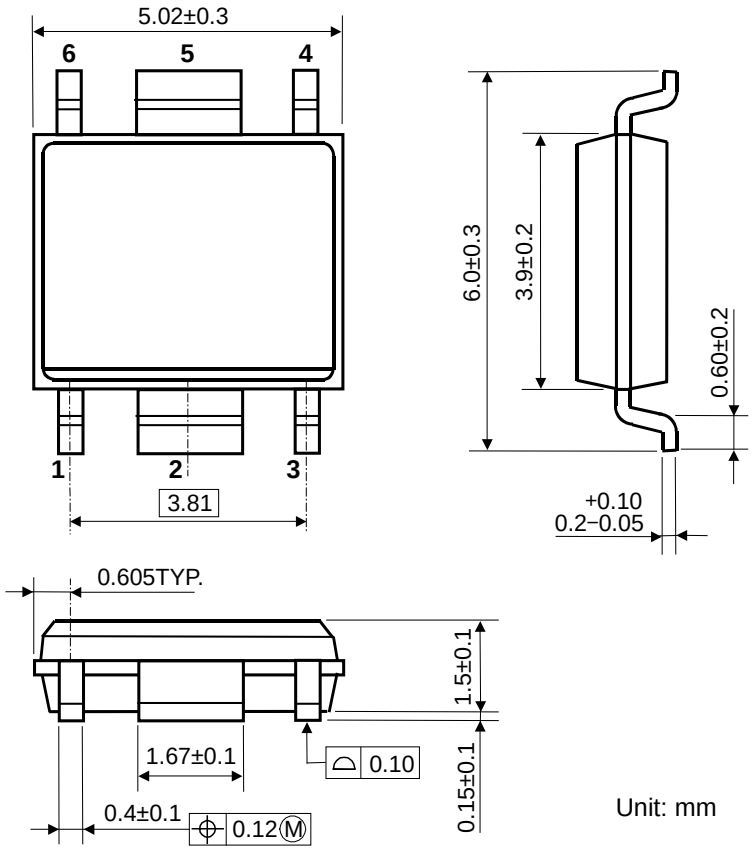

HSOP-6J Package Dimensions

POWER DISSIPATION (TO-252-5-P2)

The power dissipation of the package is dependent on PCB material, layout, and environmental conditions. The following measurement conditions are based on JEDEC STD. 51-7.

Measurement Conditions

Item	Measurement Conditions
Environment	Mounting on Board (Wind Velocity = 0 m/s)
Board Material	Glass Cloth Epoxy Plastic (Four-Layer Board)
Board Dimensions	76.2 mm × 114.3 mm × 0.8 mm
Copper Ratio	Outer Layer (First Layer): Less than 95% of 50 mm Square Inner Layers (Second and Third Layers): Approx. 100% of 50 mm Square Outer Layer (Fourth Layer): Approx. 100% of 50 mm Square
Through-holes	ϕ 0.4 mm × 30 pcs

Measurement Result (Ta = 25°C, Tjmax = 125°C)

Item	Measurement Result
Power Dissipation	3800 mW
Thermal Resistance (θja)	θja = 26°C/W
Thermal Characterization Parameter (ψjt)	ψjt = 7°C/W

θja: Junction-to-Ambient Thermal Resistance

ψjt: Junction-to-Top Thermal Characterization Parameter

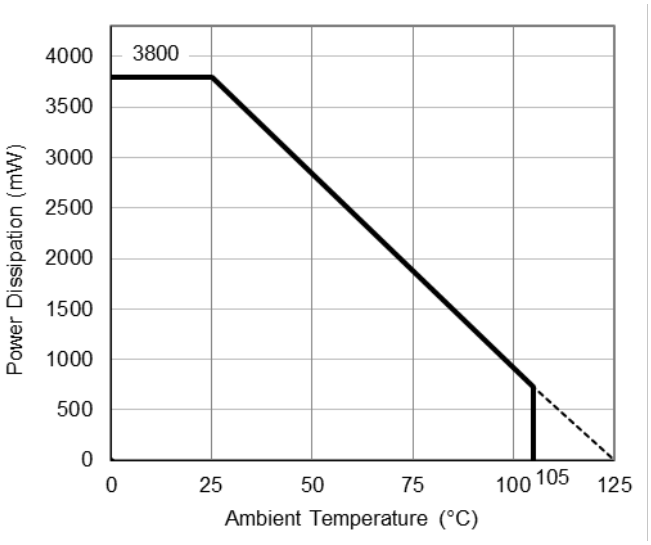

Power Dissipation vs. Ambient Temperature

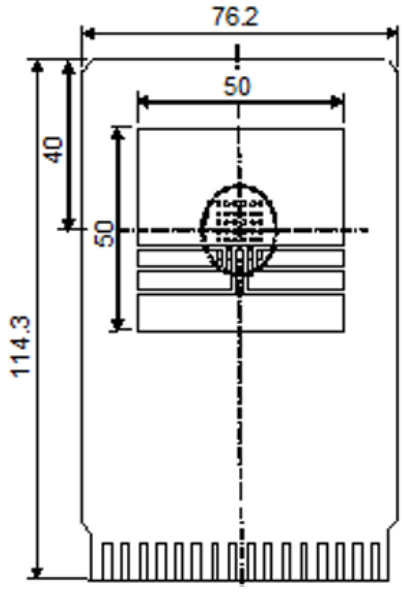

Measurement Board Pattern

PACKAGE DIMENSIONS (TO-252-5-P2)

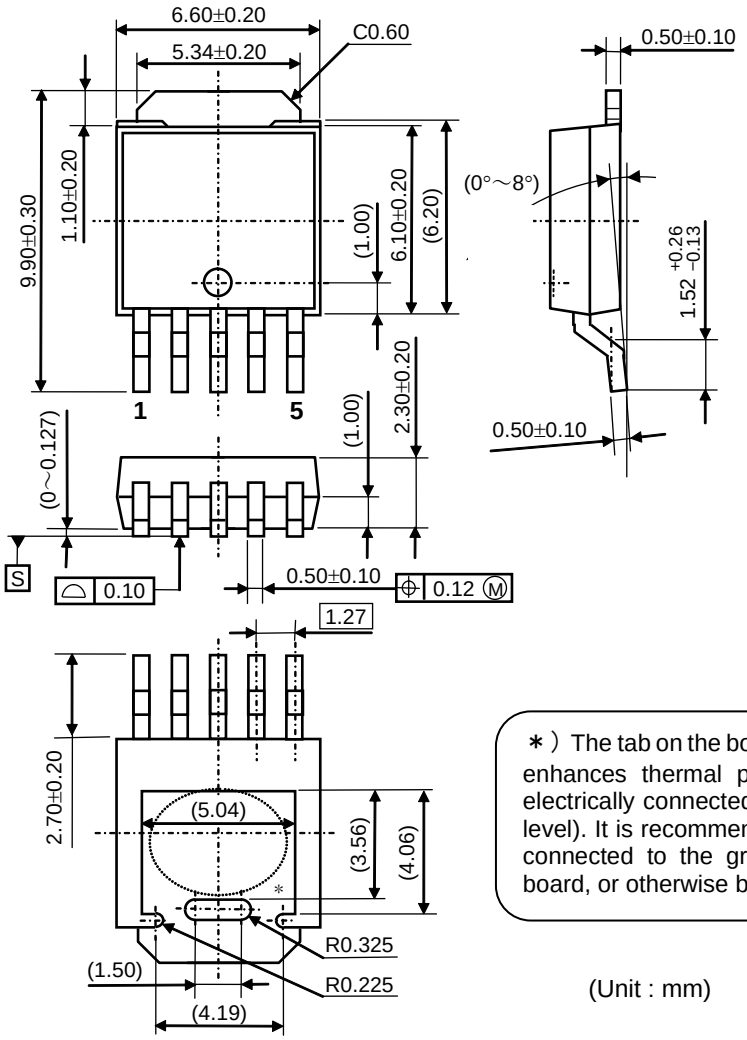

＊）The tab on the bottom of the package enhances thermal performance and is electrically connected to GND (substrate level). It is recommended that the tab be connected to the ground plane on the board, or otherwise be left floating.

(Unit : mm)

MARK SPECIFICATION (TO-252-5-P2)

①②③④⑤⑥⑦⑧: Product Code … **Refer to *MARK SPECIFICATION TABLE (TO-252-5-P2)***

⑨⑩: Lot Number … Alphanumeric Serial Number

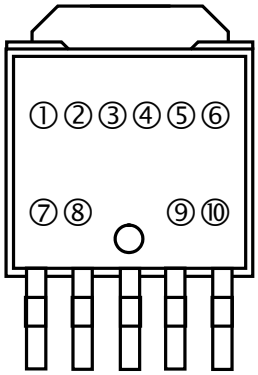

TO-252-5-P2 Mark Specification

NOTICE
There can be variation in the marking when different AOI (Automated Optical Inspection) equipment is used. In the case of recognizing the marking characteristic with AOI, please contact our sales or our distributor before attempting to use AOI.

MARK SPECIFICATION TABLE (TO-252-5-P2)

RP132Jxx1B

Product Name	①②③④⑤⑥⑦⑧	V_{SET}
RP132J081B	**G 1 J 0 8 1 B**	0.8V
RP132J121B	**G 1 J 1 2 1 B**	1.2V
RP132J151B	**G 1 J 1 5 1 B**	1.5V
RP132J181B	**G 1 J 1 8 1 B**	1.8V
RP132J251B	**G 1 J 2 5 1 B**	2.5V
RP132J301B	**G 1 J 3 0 1 B**	3.0V
RP132J331B	**G 1 J 3 3 1 B**	3.3V
RP132J401B	**G 1 J 4 0 1 B**	4.0V
RP132J501B	**G 1 J 5 0 1 B**	5.0V
RP132J101B5	**G 1 J 1 0 1 B 5**	1.05V

RP132Jxx1D

Product Name	①②③④⑤⑥⑦⑧	V_{SET}
RP132J081D	**G 1 J 0 8 1 D**	0.8V
RP132J121D	**G 1 J 1 2 1 D**	1.2V
RP132J151D	**G 1 J 1 5 1 D**	1.5V
RP132J181D	**G 1 J 1 8 1 D**	1.8V
RP132J251D	**G 1 J 2 5 1 D**	2.5V
RP132J301D	**G 1 J 3 0 1 D**	3.0V
RP132J331D	**G 1 J 3 3 1 D**	3.3V
RP132J401D	**G 1 J 4 0 1 D**	4.0V
RP132J501D	**G 1 J 5 0 1 D**	5.0V
RP132J101D5	**G 1 J 1 0 1 D 5**	1.05V

RP132J001B (Adjustable Output Voltage Type)

Product Name	①②③④⑤⑥⑦⑧	V_{SET}
RP132J001B	**G 1 J 0 0 1 B**	-

RP132J001D (Adjustable Output Voltage Type)

Product Name	①②③④⑤⑥⑦⑧	V_{SET}
RP132J001D	**G 1 J 0 0 1 D**	-

TEST CIRCUITS

- **Fixed Output Voltage Type（HSOP-6J / SOT89-5）**

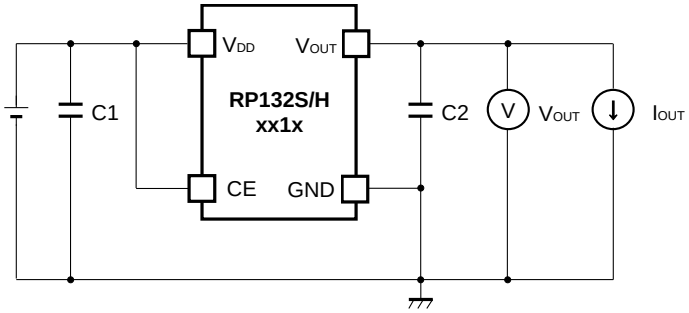

Basic Test Circuit

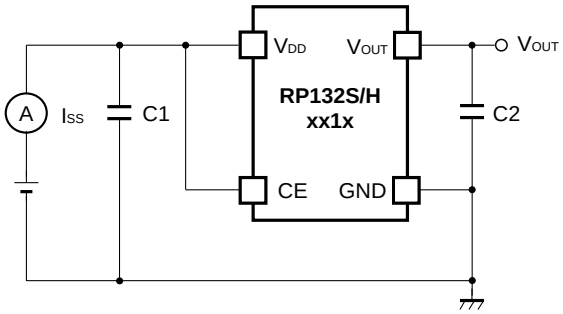

Test Circuit for Supply Current

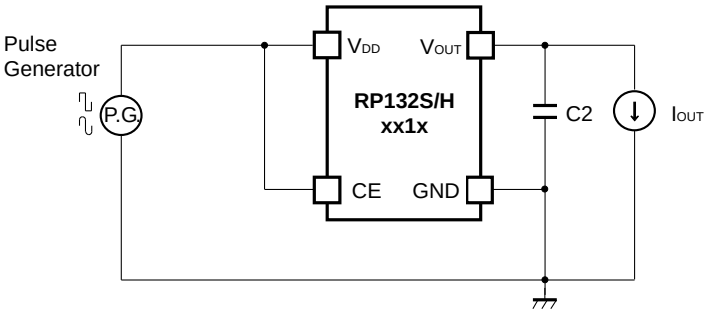

Test Circuit for Ripple Rejection

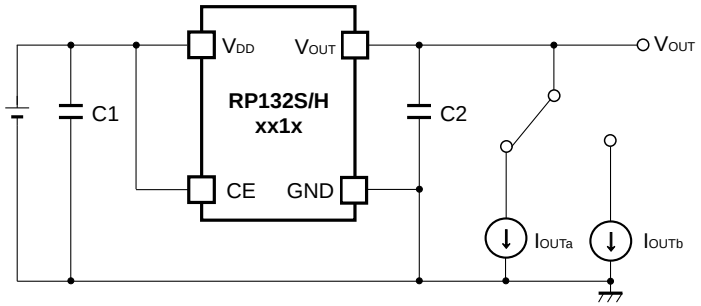

Test Circuit for Load Transient Response

- **Fixed Output Voltage Type（TO-252-5-P2 / DFN(PL)1820-6）**

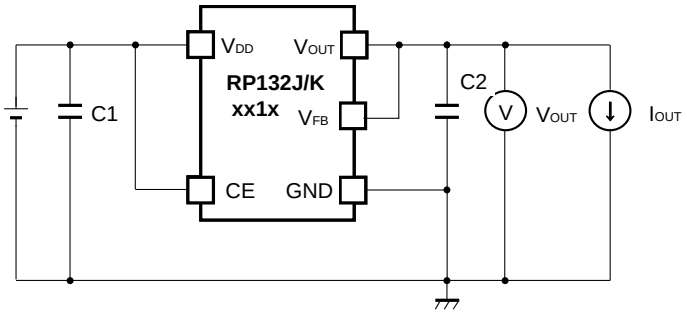

Basic Test Circuit

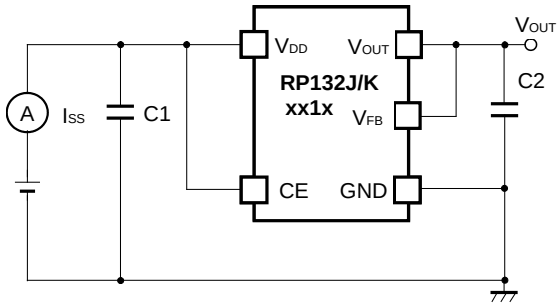

Test Circuit for Supply Current

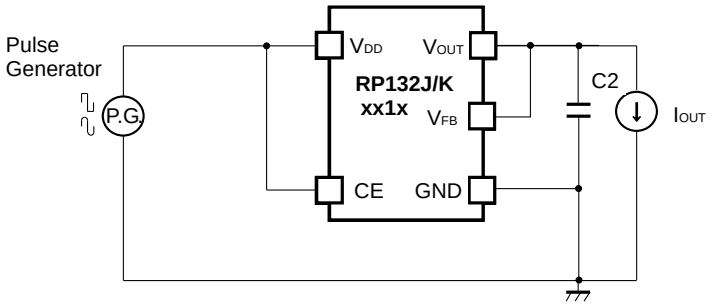

Test Circuit for Ripple Rejection

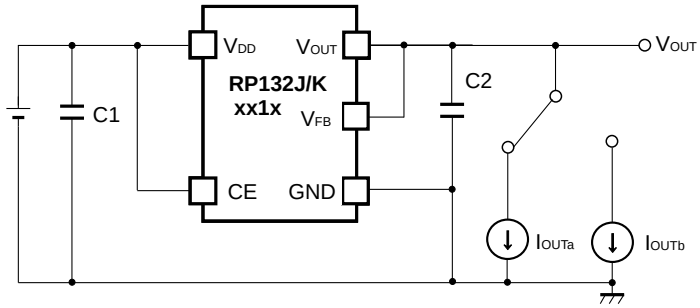

Test Circuit for Load Transient Response

- **Adjustable Output Voltage Type（HSOP-6J / SOT89-5/ TO-252-5-P2 / DFN(PL)1820-6）**

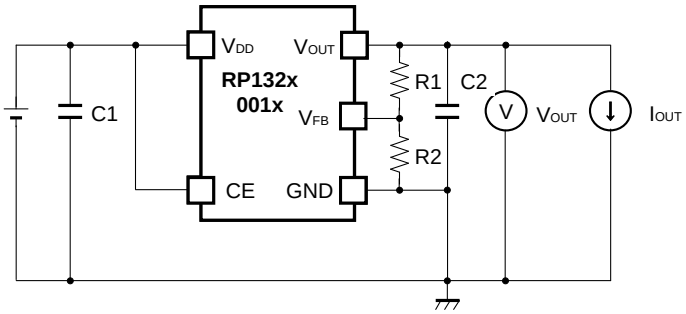

Basic Test Circuit

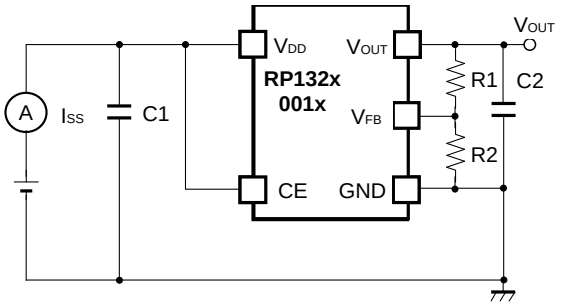

Test Circuit for Supply Current

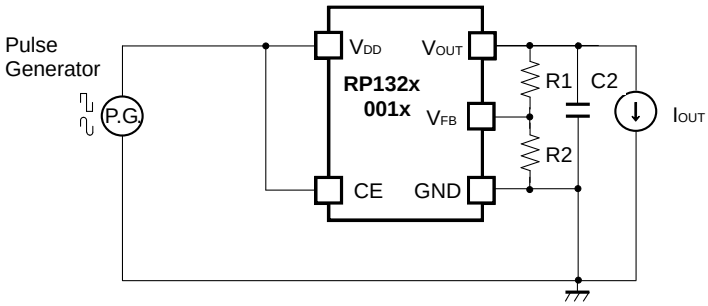

Test Circuit for Ripple Rejection

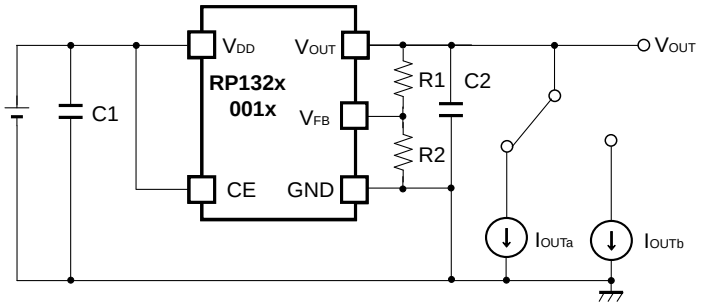

Test Circuit for Load Transient Response

Please refer to "Adjustable Output Voltage Type Settings" when using R1 and R2 as output capacitors.

TYPICAL CHARACTERISTICS

Note: Typical Characteristics are intended to be used as reference data; they are not guaranteed.

1) Output Voltage vs. Input Voltage (Ta=25°C)

RP132x08xx

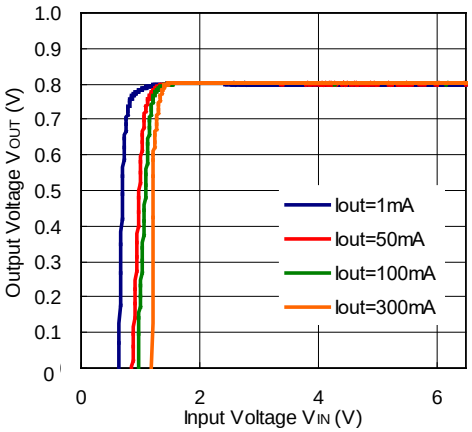

RP132x15xx

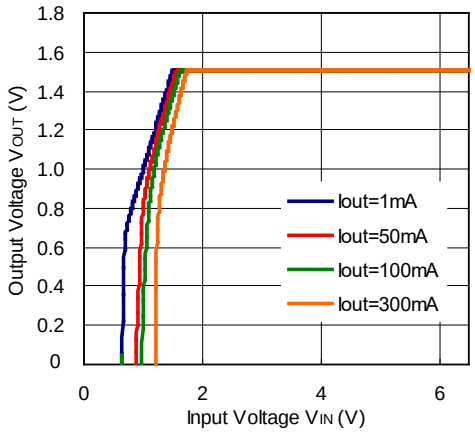

RP132x33xx

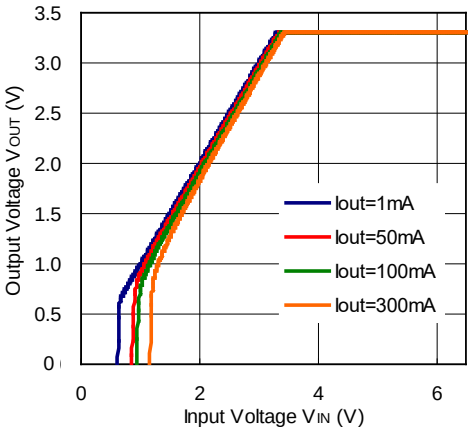

RP132x55xx

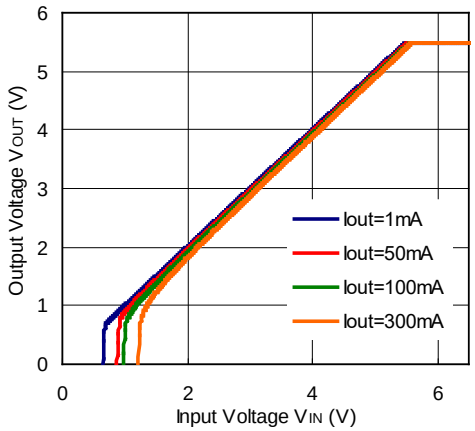

2) Supply Current vs. Input Voltage (Ta=25°C)

RP13x08xx

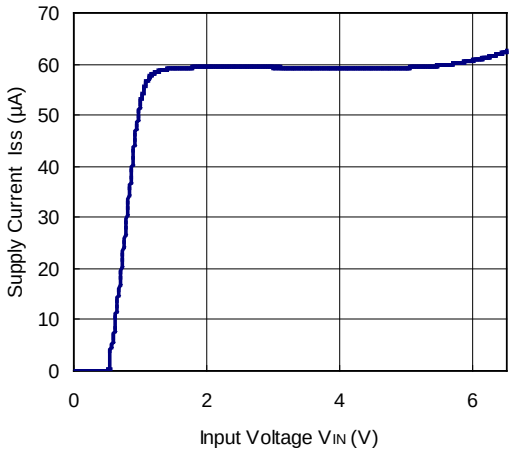

RP132x15xx

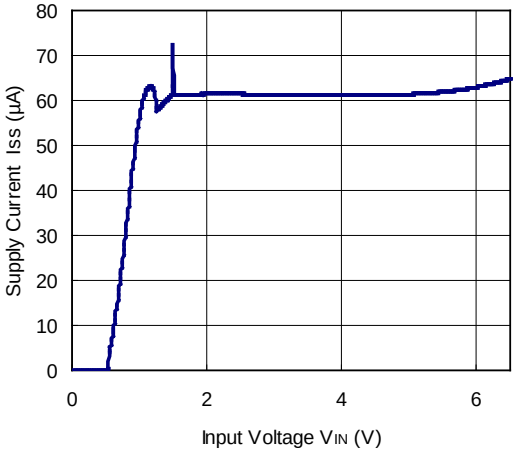

RP132x33xx

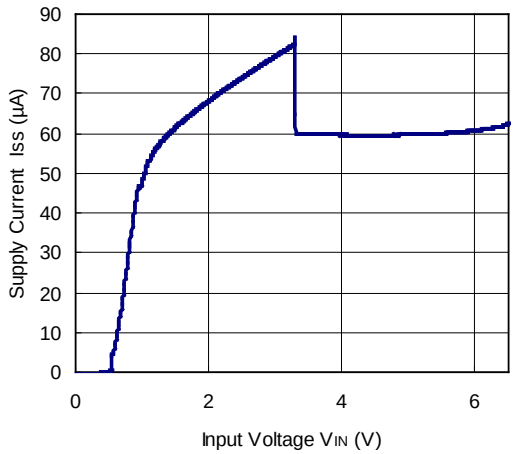

RP132x55xx

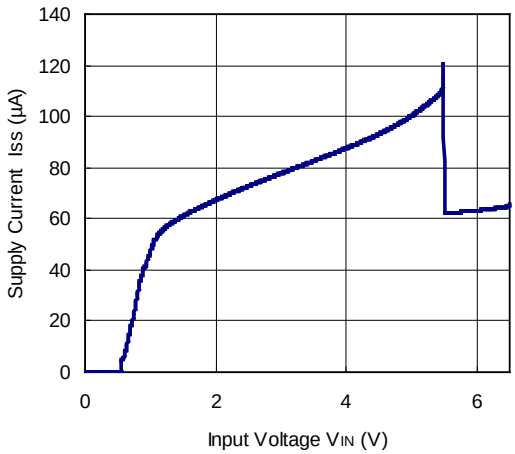

3) Supply Current vs. Temperature

RP132x08xx

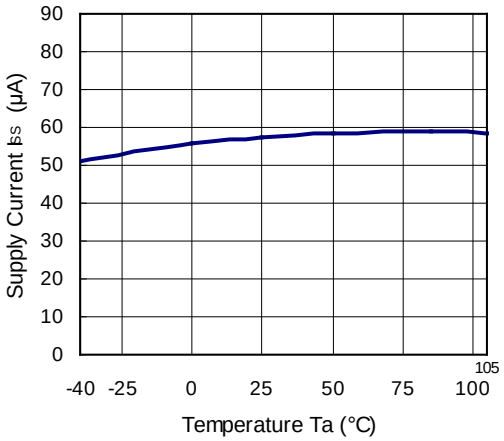

RP132x15xx

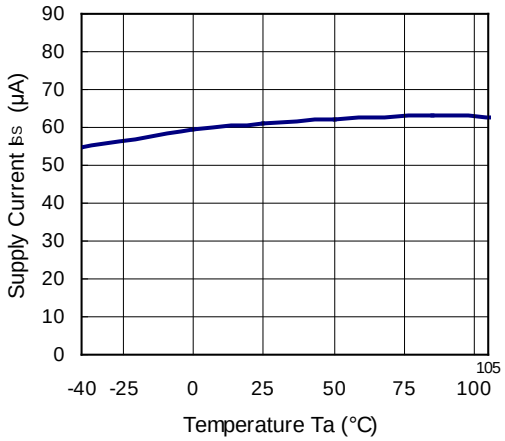

RP132x33xx

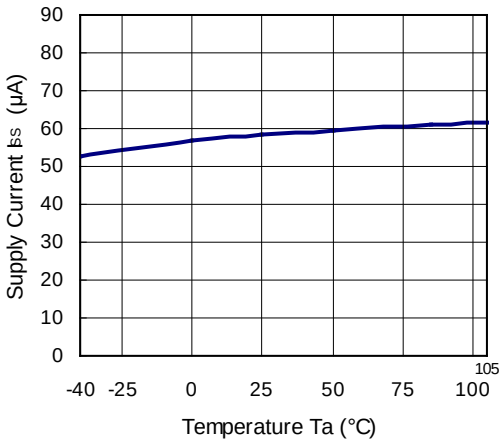

RP132x55xx

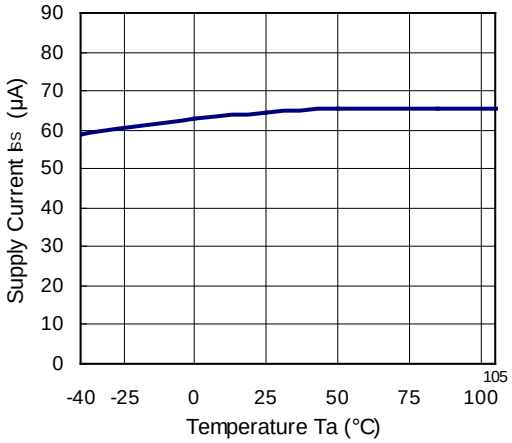

4) Output Voltage vs. Temperature

RP132x08xx

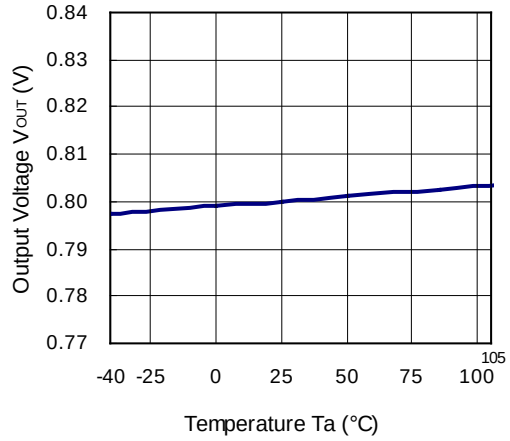

RP132x15xx

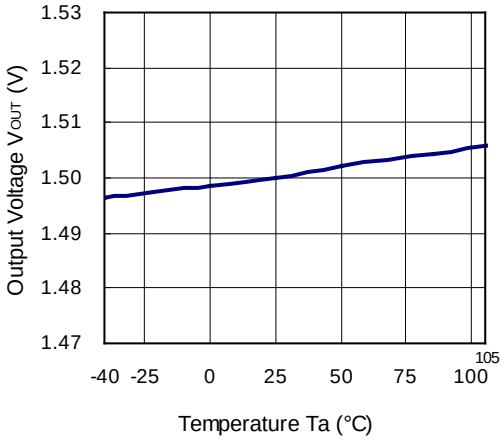

RP132x33xx

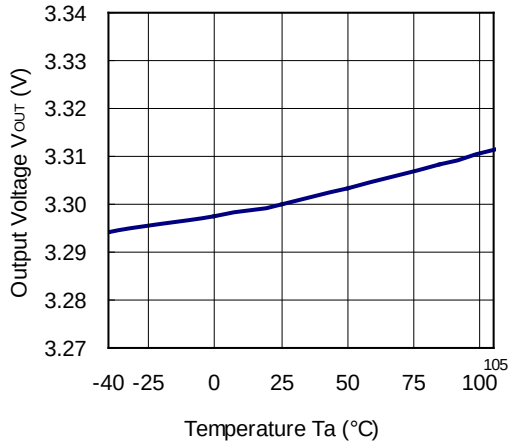

RP132x55xx

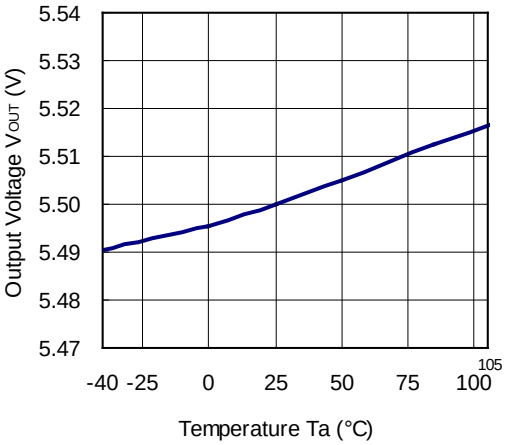

5) Dropout Voltage vs. Output Current

RP132x08xx

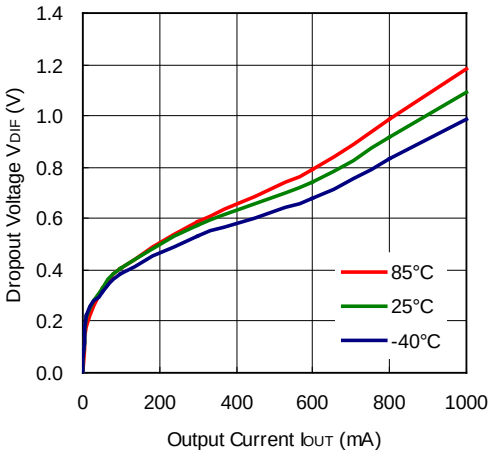

RP132x15xx

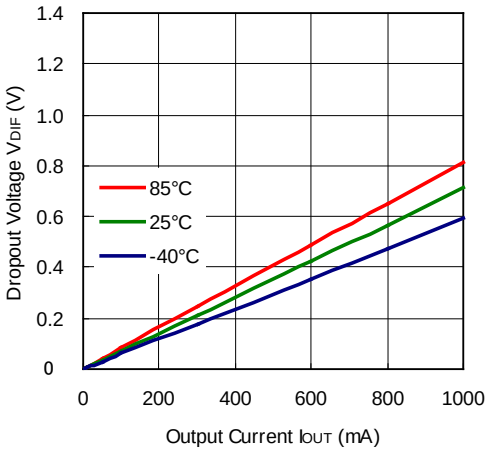

RP132x33xx

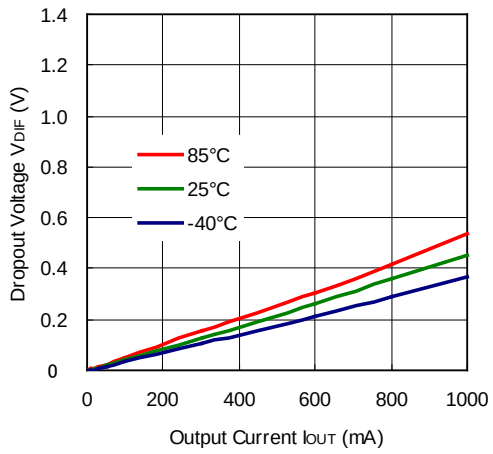

RP132x55xx

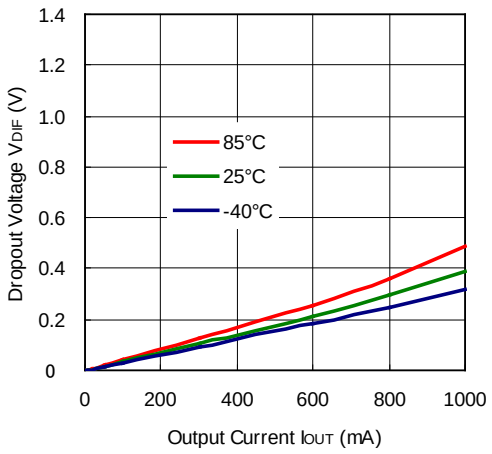

6) Dropout Voltage vs. Set Output Voltage

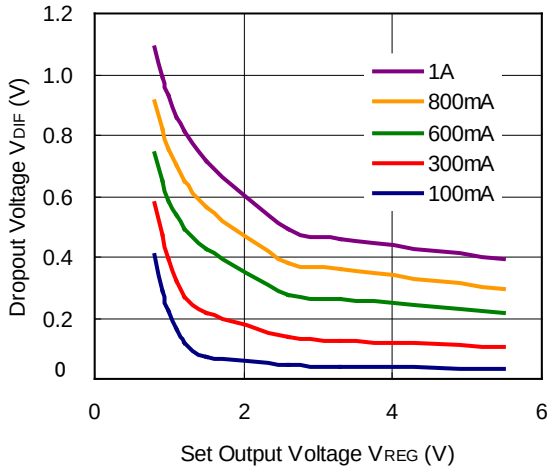

7) Ripple Rejection vs. Input Voltage (C1=none, Ripple=0.2Vp-p, Ta=25°C)

RP132x33xx

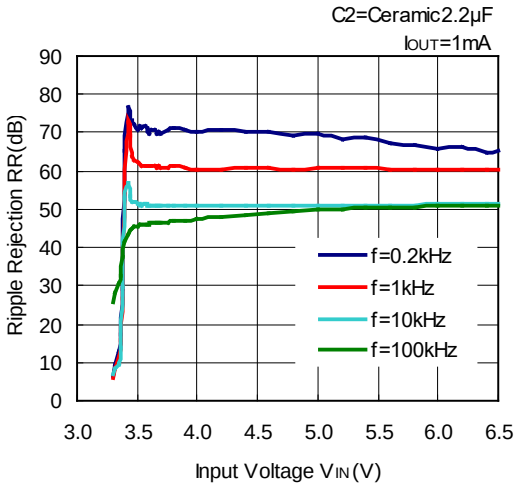

RP132x33xx

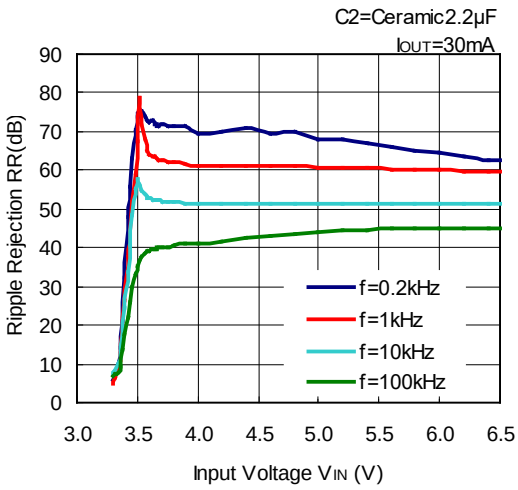

RP132x33xx

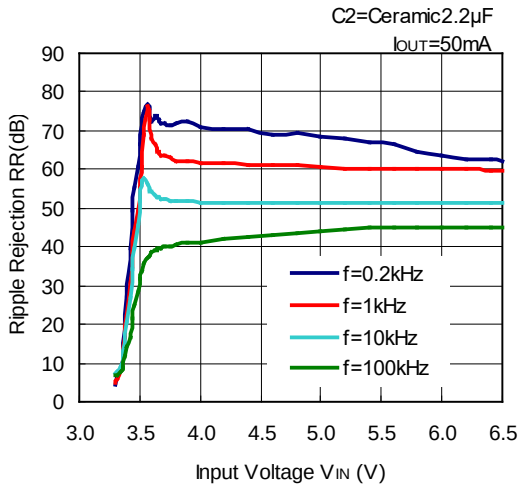

RP131x55xx

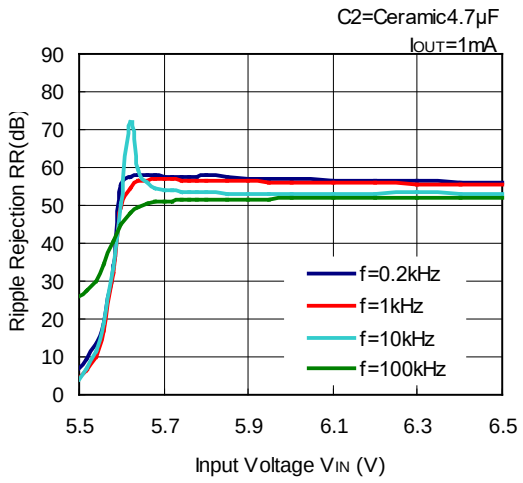

RP132x55xx

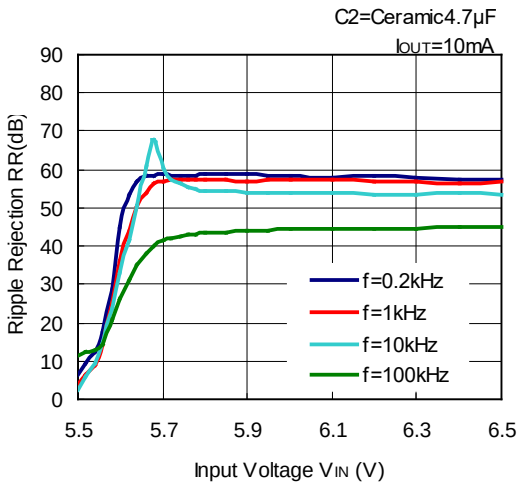

RP132x55xx

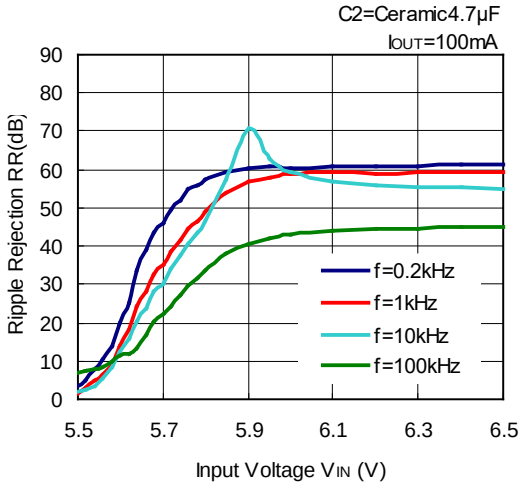

8) Ripple Rejection vs. Frequency (C1=none, $V_{IN}=V_{SET}+1.0V+0.2Vp-p$, Ta=25°C)

RP132x08xx

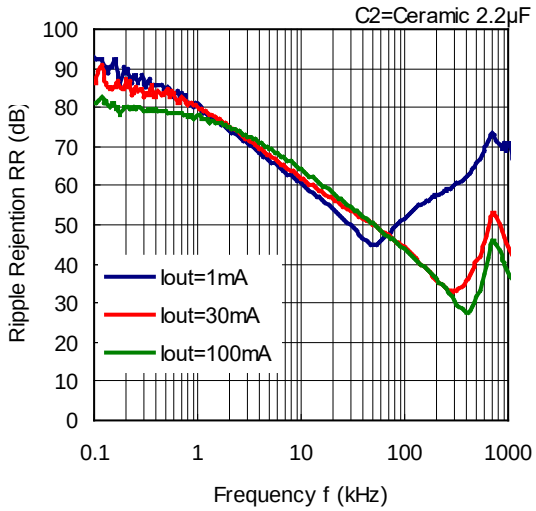

RP132x33xx

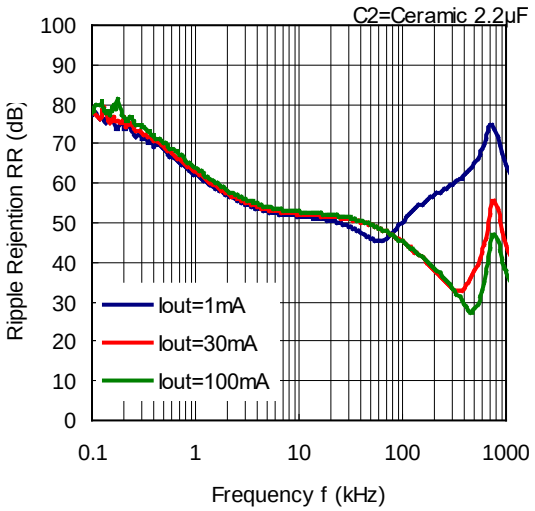

RP132x55xx

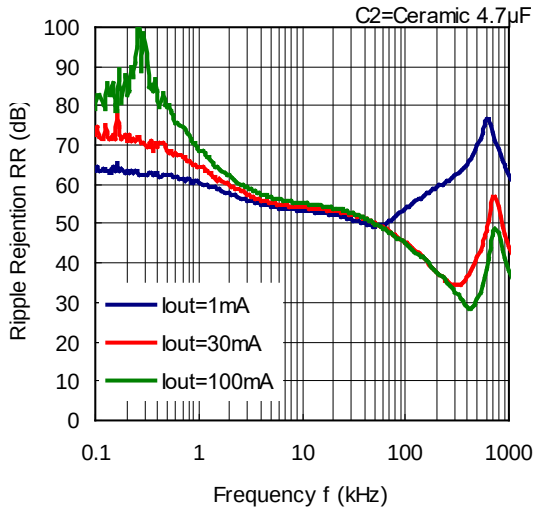

9) Input Transient Response (C1=none, I_{OUT}=100mA, tr=tf=5µs, Ta=25°C)

RP132x08xx

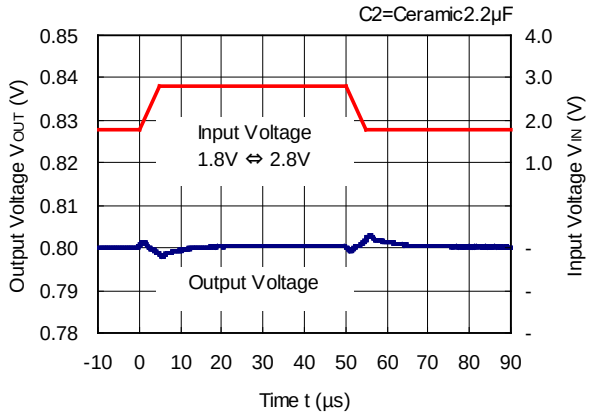

RP132x33xx

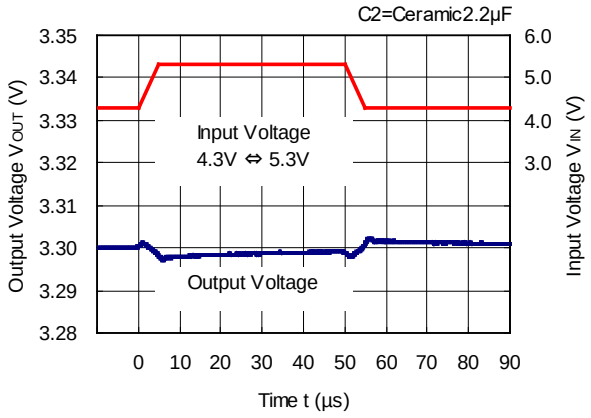

RP132x55xx

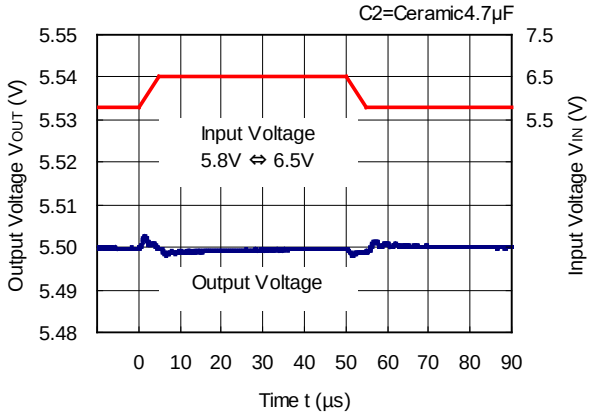

10) Load Transient Response (V_{IN}=V_{OUT}+1.0V, C1=Ceramic 2.2µF, tr=tf=0.5µs, Ta=25°C)

RP132x08xx

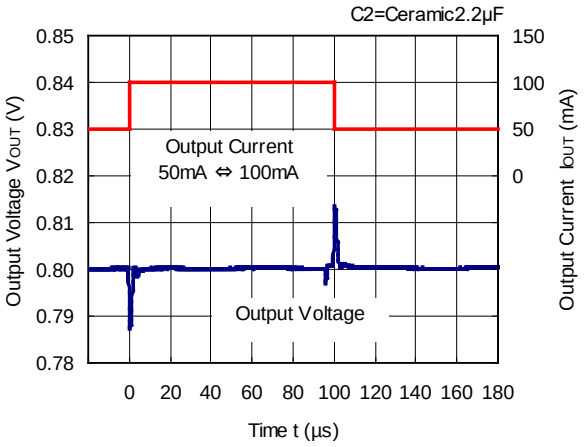

RP132x08xx

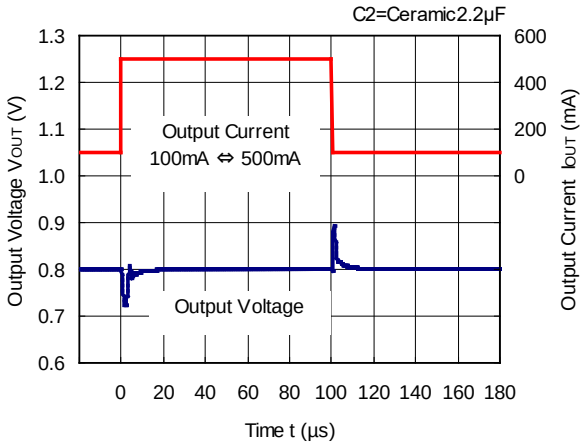

RP132x08xx

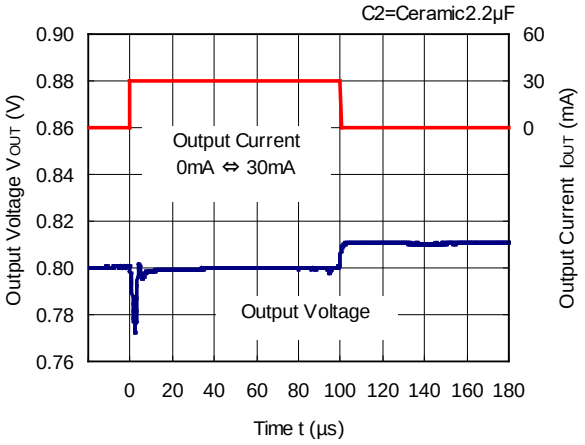

RP132x33xx

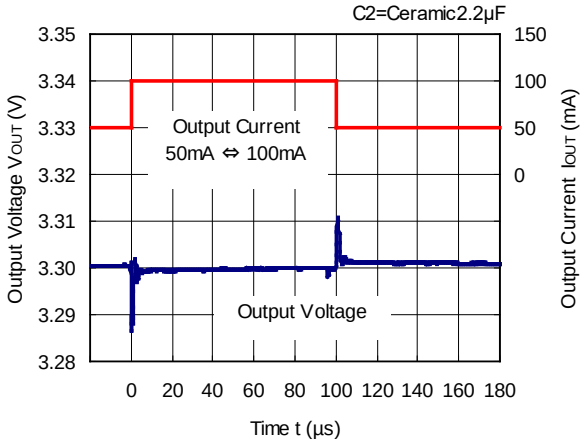

RP132x33xx

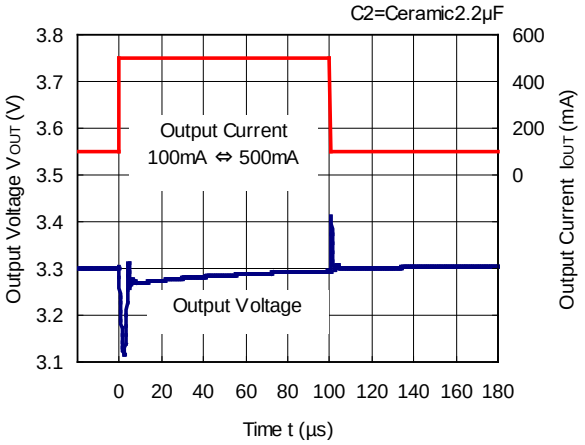

RP132x33xx

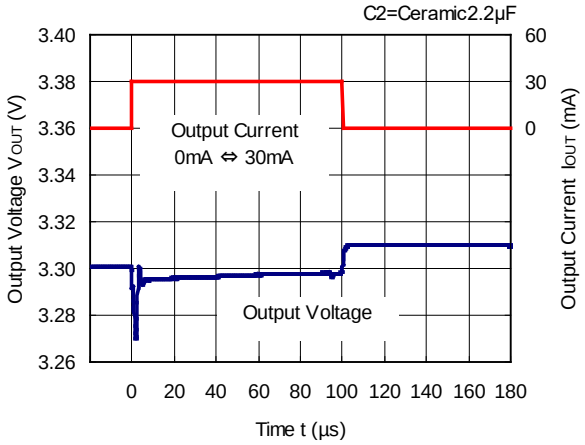

RP132x55xx

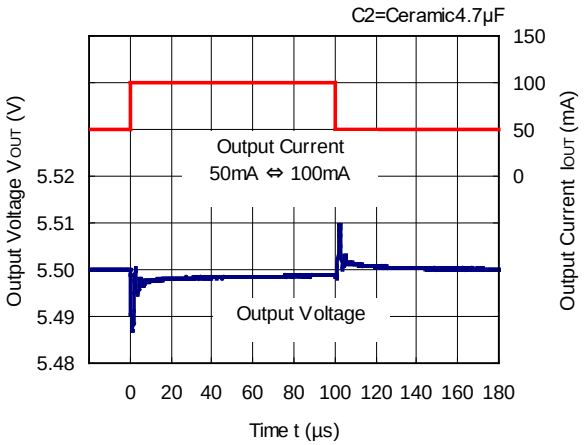

RP132x55xx

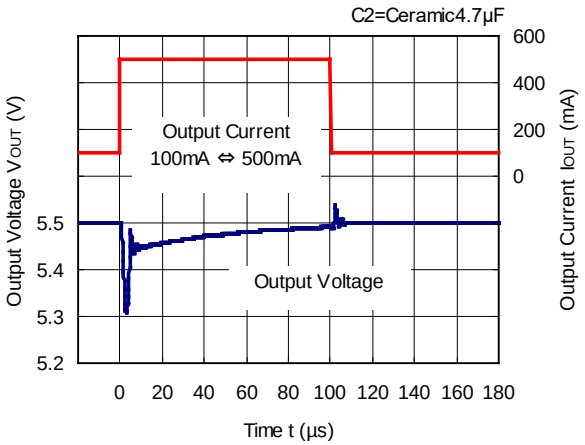

RP132x55xx

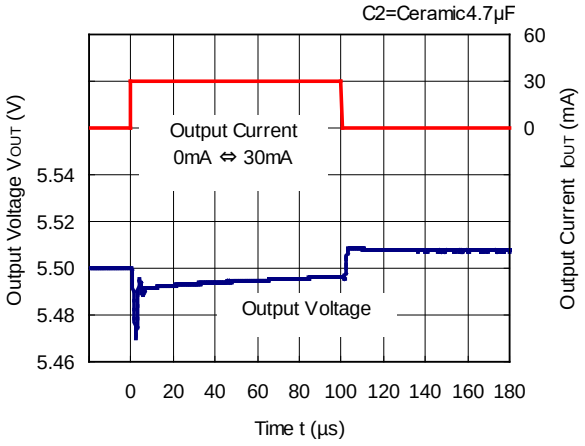

11) Turn on Speed with CE pin (V_{IN}=V_{SET}+1.0V, C1=Ceramic 2.2µF, Ta=25°C)

RP132x08xx

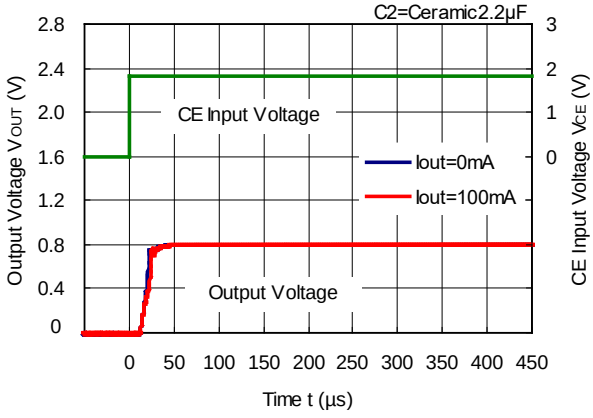

RP132x33xx

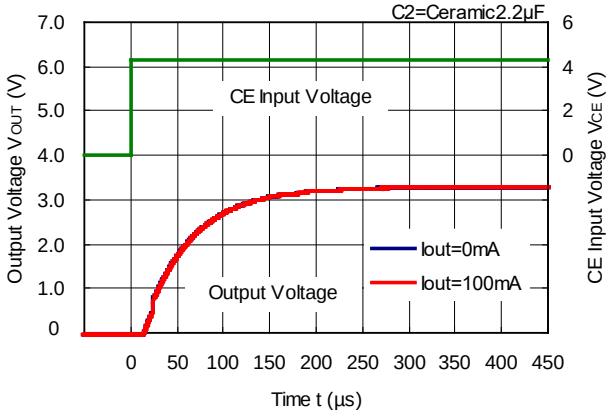

RP132x55xx

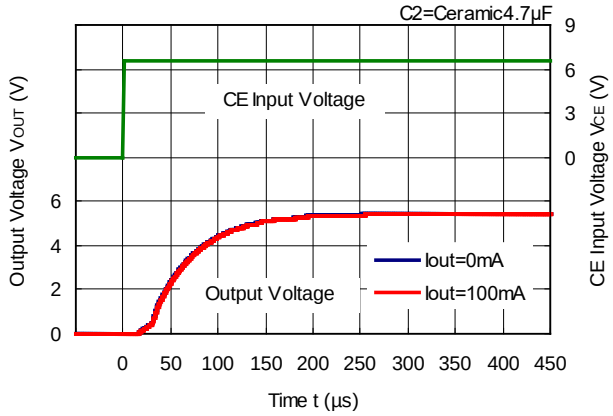

12) Turn off Speed with CE pin (D version) (C1=Ceramic 2.2µF, Ta=25°C)

RP132x08xD

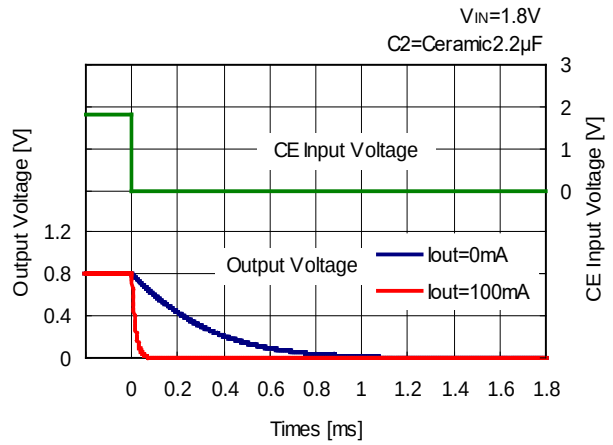

RP132x33xD

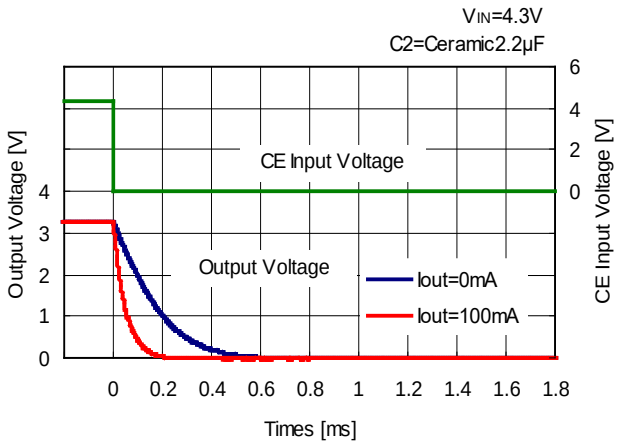

RP132x55xD

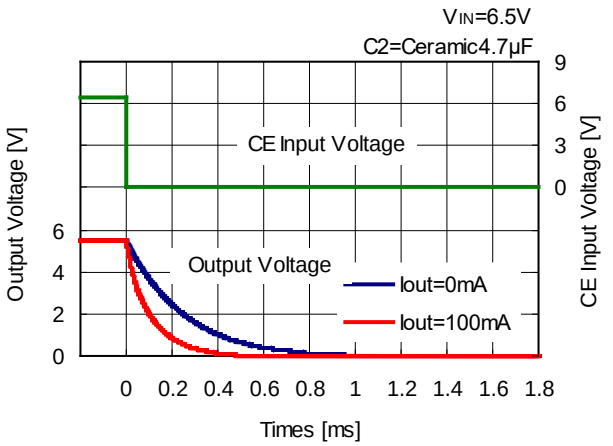

13) Inrush Current (C1=Ceramic 2.2µF, I_{OUT}=100mA, Ta=25°C)

RP132x08xx

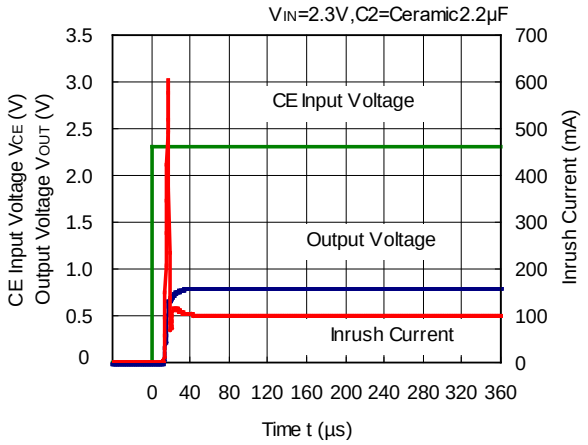

RP132x33xx

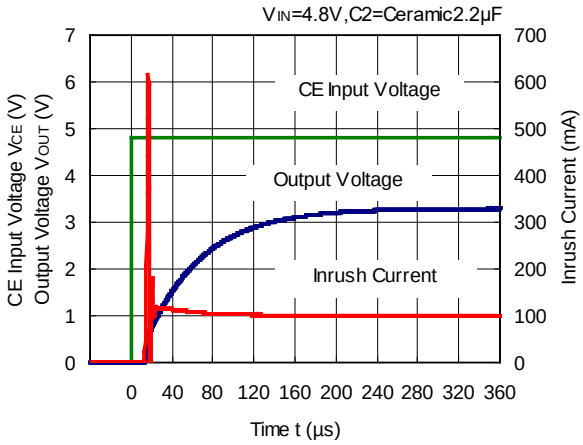

RP132x55xx

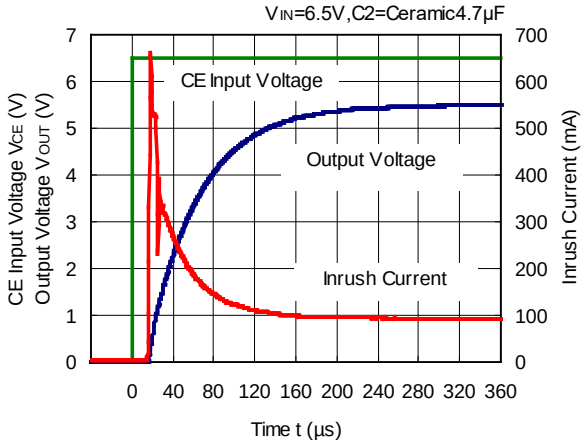

14) Minimum Operating Voltage

RP132x08xx

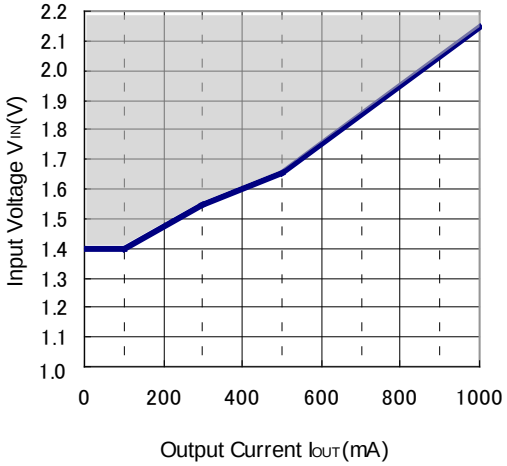

The operation rage that can output 0.8V is shown by the hatched area in the graph.

ESR vs. Output Current

When using these ICs, consider the following points:

The relations between I_{OUT} (Output Current) and ESR of an output capacitor are shown below.
The conditions when the white noise level is under 40μV (Avg.) are marked as the hatched area in the graph.

Measurement Conditions

Frequency Band : 10Hz to 2MHz
Temperature : −40°C to 85°C
Hatched Area : Noise level is under 40μVms (Avg.)
C1 : 2.2μF (Kyocera CM05X5R225M06A)
C2 : 2.2μF (V_{OUT} = 0.8V, Kyocera CM105X5R225K06AB)
4.7μF (V_{OUT} = 5.5V, Kyocera CM105X5R475M06AB)

RP132x08xx

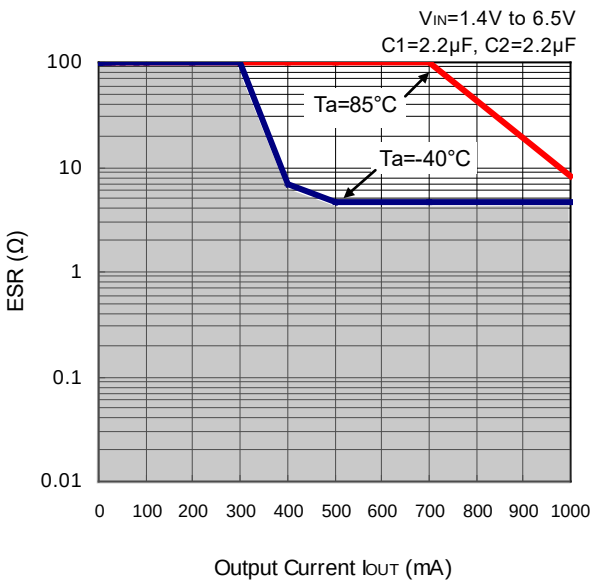

RP132x55xx

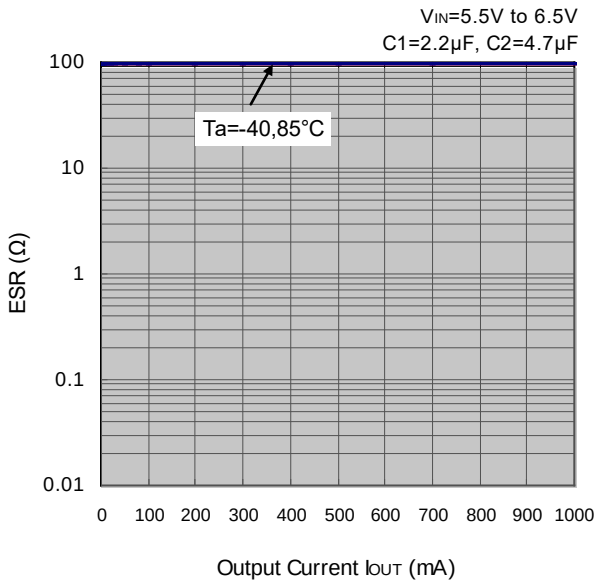

1. The products and the product specifications described in this document are subject to change or discontinuation of production without notice for reasons such as improvement. Therefore, before deciding to use the products, please refer to our sales representatives for the latest information thereon.
2. The materials in this document may not be copied or otherwise reproduced in whole or in part without the prior written consent of us.
3. This product and any technical information relating thereto are subject to complementary export controls (so-called KNOW controls) under the Foreign Exchange and Foreign Trade Law, and related politics ministerial ordinance of the law. (Note that the complementary export controls are inapplicable to any application-specific products, except rockets and pilotless aircraft, that are insusceptible to design or program changes.) Accordingly, when exporting or carrying abroad this product, follow the Foreign Exchange and Foreign Trade Control Law and its related regulations with respect to the complementary export controls.
4. The technical information described in this document shows typical characteristics and example application circuits for the products. The release of such information is not to be construed as a warranty of or a grant of license under our or any third party's intellectual property rights or any other rights.
5. The products listed in this document are intended and designed for use as general electronic components in standard applications (office equipment, telecommunication equipment, measuring instruments, consumer electronic products, amusement equipment etc.). Those customers intending to use a product in an application requiring extreme quality and reliability, for example, in a highly specific application where the failure or misoperation of the product could result in human injury or death should first contact us.
    - Aerospace Equipment
    - Equipment Used in the Deep Sea
    - Power Generator Control Equipment (nuclear, steam, hydraulic, etc.)
    - Life Maintenance Medical Equipment
    - Fire Alarms / Intruder Detectors
    - Vehicle Control Equipment (automotive, airplane, railroad, ship, etc.)
    - Various Safety Devices
    - Traffic control system
    - Combustion equipment

    In case your company desires to use this product for any applications other than general electronic equipment mentioned above, make sure to contact our company in advance. Note that the important requirements mentioned in this section are not applicable to cases where operation requirements such as application conditions are confirmed by our company in writing after consultation with your company.
6. We are making our continuous effort to improve the quality and reliability of our products, but semiconductor products are likely to fail with certain probability. In order to prevent any injury to persons or damages to property resulting from such failure, customers should be careful enough to incorporate safety measures in their design, such as redundancy feature, fire containment feature and fail-safe feature. We do not assume any liability or responsibility for any loss or damage arising from misuse or inappropriate use of the products.
7. The products have been designed and tested to function within controlled environmental conditions. Do not use products under conditions that deviate from methods or applications specified in this datasheet. Failure to employ the products in the proper applications can lead to deterioration, destruction or failure of the products. We shall not be responsible for any bodily injury, fires or accident, property damage or any consequential damages resulting from misuse or misapplication of the products.
8. Quality Warranty
    8-1. Quality Warranty Period
    In the case of a product purchased through an authorized distributor or directly from us, the warranty period for this product shall be one (1) year after delivery to your company. For defective products that occurred during this period, we will take the quality warranty measures described in section 8-2. However, if there is an agreement on the warranty period in the basic transaction agreement, quality assurance agreement, delivery specifications, etc., it shall be followed.
    8-2. Quality Warranty Remedies
    When it has been proved defective due to manufacturing factors as a result of defect analysis by us, we will either deliver a substitute for the defective product or refund the purchase price of the defective product.
    Note that such delivery or refund is sole and exclusive remedies to your company for the defective product.
    8-3. Remedies after Quality Warranty Period
    With respect to any defect of this product found after the quality warranty period, the defect will be analyzed by us. On the basis of the defect analysis results, the scope and amounts of damage shall be determined by mutual agreement of both parties. Then we will deal with upper limit in Section 8-2. This provision is not intended to limit any legal rights of your company.
9. Anti-radiation design is not implemented in the products described in this document.
10. The X-ray exposure can influence functions and characteristics of the products. Confirm the product functions and characteristics in the evaluation stage.
11. WLCSP products should be used in light shielded environments. The light exposure can influence functions and characteristics of the products under operation or storage.
12. Warning for handling Gallium and Arsenic (GaAs) products (Applying to GaAs MMIC, Photo Reflector). These products use Gallium (Ga) and Arsenic (As) which are specified as poisonous chemicals by law. For the prevention of a hazard, do not burn, destroy, or process chemically to make them as gas or power. When the product is disposed of, please follow the related regulation and do not mix this with general industrial waste or household waste.
13. Please contact our sales representatives should you have any questions or comments concerning the products or the technical information.

NISSHINBO

Nisshinbo Micro Devices Inc.

Official website

https://www.nisshinbo-microdevices.co.jp/en/

Purchase information

https://www.nisshinbo-microdevices.co.jp/en/buy/

ENTEGRECİ

Bu belge www.entegreci.com üzerinden sunulmaktadır.

Elektronik komponent tedarikinde Entegreci

Entegreci, Eskişehir merkezli, Türkiye geneline satış yapan bir elektronik komponent mağazasıdır. Entegreler (IC), mikrodenetleyiciler, transistörler, diyotlar, pasif elemanlar, konnektörler, modüller ve geliştirme kartları tek adetten seri üretim adetlerine kadar satılır. Ürün sayfalarında güncel stok durumunu, fiyatı ve datasheet bağlantısını bulabilirsiniz.

Parça koduyla arama

Üretici parça numarasını yazın; stok ve fiyatı hemen görün.

www.entegreci.com

Ürün kategorileri

Entegreden kapasitöre tüm elektronik komponent kategorileri.

Kategorilere göz atın

Üreticiler

Aradığınız üreticinin ürünlerini tek sayfada inceleyin.

Üreticileri görün

Toplu alım ve teklif

Listede olmayan ya da yüksek adetli parçalar için teklif isteyin.

Teklif isteyin

www.entegreci.com | **destek@entegreci.com** | **0850 305 90 34**

Entegreci is an online electronic components store based in Türkiye. Search by manufacturer part number to see stock, prices and datasheets for integrated circuits, microcontrollers, transistors, passive components and connectors, or request a quote for parts that are not listed.

Bu sayfa Entegreci tarafından eklenmiştir. Belgenin önceki sayfaları asıl yayıncısına aittir ve içeriği değiştirilmemiştir; en güncel sürüm için belgenin yayıncısına başvurun.