RP200Q (SC-88A) is the discontinued product as of January 2017.
RP200Z(WLCSP-4-P5) is the discontinued product as of April, 2023

NISSHINBO

RP200x SERIES

3-MODE 300mA LDO REGULATOR

NO.EA-182-230419

OUTLINE

The RP200x Series consist of CMOS-based voltage regulator ICs with high output voltage accuracy, low dropout voltage and low supply current. These ICs perform with the chip enable function and realize a standby mode with ultra low supply current. To prevent the destruction by over current, the current limit circuit is included. The RP200x Series have 3-mode. One is standby mode with CE pin. Other two modes are realized with ECO Function. Fast Response Mode (Fast Mode) and Fast and Low Power auto-change Mode (Auto ECO Mode) are alternative with Auto Eco pin (AE pin). Supply current of IC itself at light load is automatically reduced at Auto ECO Mode compared with Fast Mode. The output voltage is maintained between Fast Mode and Auto ECO Mode.

Without AE pin type is also available. It is an LDO regulator with Auto ECO mode. (RP200Z in WLCSP.)

Since the packages for these ICs are SOT-23-5, SC-88A, thin DFN(PL)1212-6, and WLCSP-4-P5, high density mounting of the ICs on boards is possible. RP200Q (SC-88A), RP200K (DFN(PL)1212-6) and RP200N (SOT-23-5) has AE pin, then if the AE pin is "H", Fast Mode is available. If the AE pin is set at "L" level, Auto ECO Mode operation is available.

FEATURES

- Supply Current (Low power Mode) ..... Typ. 1.0µA ($V_{OUT} \leq 1.85V$)
- Supply Current (Fast Mode)..... Typ. 55µA
- Supply Current (Standby Mode) ..... Typ. 0.1 µA
- Ripple Rejection..... Typ. 70dB (f=1kHz)
- Input Voltage Range ..... 1.4V to 5.25V
- Output Voltage Range..... 0.8V to 4.0V (0.1V steps)
  (For other voltages, please refer to MARK INFORMATIONS.)
- Output Voltage Accuracy..... ±1.0% ($V_{OUT} > 2.0V$, T_{opt}=25°C)
- Temperature-Drift Coefficient of Output Voltage ..... Typ. ±50ppm/°C
- Dropout Voltage ..... Typ. 0.23V (I_{OUT}=300mA, V_{OUT}=2.8V)
- Line Regulation ..... Typ. 0.02%/V
- Packages ..... WLCSP-4-P5, DFN(PL)1212-6, SC-88A, SOT-23-5
- Built-in Fold Back Protection Circuit ..... Typ. 50mA (Current at short mode)
- Ceramic capacitors are recommended..... 1.0µF

APPLICATIONS

- Power source for portable communication equipment.
- Power source for electrical appliances such as cameras, VCRs and camcorders.
- Power source for battery-powered equipment.

BLOCK DIAGRAMS

RP200K/N/QxxxB

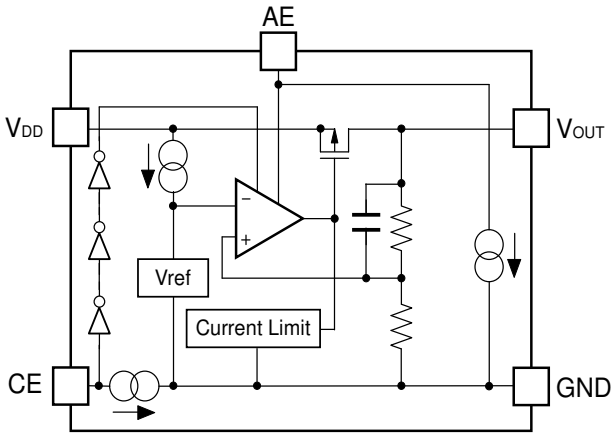

RP200Zxx1B

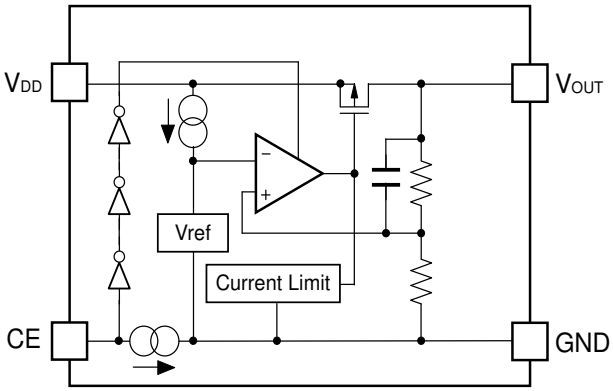

RP200K/N/QxxxD

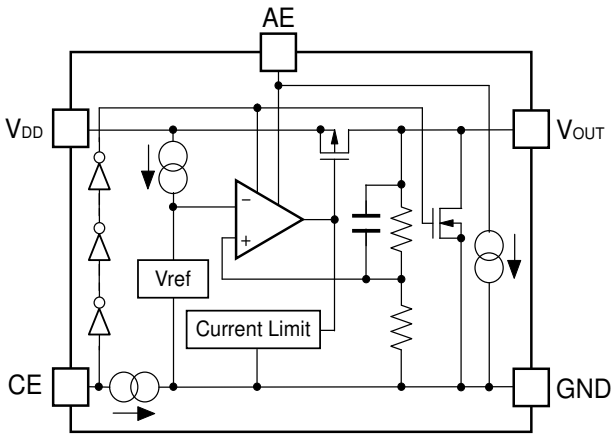

RP200Zxx1D

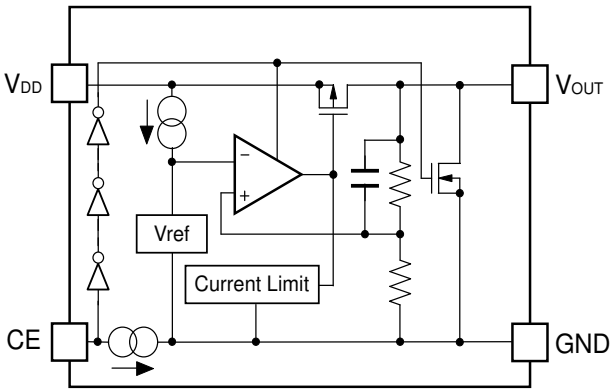

SELECTION GUIDE

The output voltage, auto discharge function, and package, etc. for the ICs can be selected at the user's request.

Product Name	Package	Quantity per Reel	Pb Free	Halogen Free
RP200Zxx1∗-TR-F	WLCSP-4-P5	5,000 pcs	Yes	Yes
RP200Kxx1∗-TR	DFN(PL)1212-6	5,000 pcs	Yes	Yes
RP200Qxx2∗-TR-FE	SC-88A	3,000 pcs	Yes	Yes
RP200Nxx1∗-TR-FE	SOT-23-5	3,000 pcs	Yes	Yes

xx: The output voltage can be designated in the range from 0.8V(08) to 4.0V(40) in 0.1V steps.
(For other voltages, please refer to MARK INFORMATIONS.)

∗ : The auto discharge function at off state are options as follows.
(B) without auto discharge function at off state
(D) with auto discharge function at off state

PIN CONFIGURATIONS

● **WLCSP-4-P5**

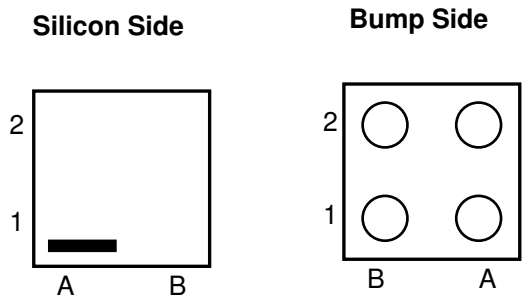

● **DFN(PL)1212-6**

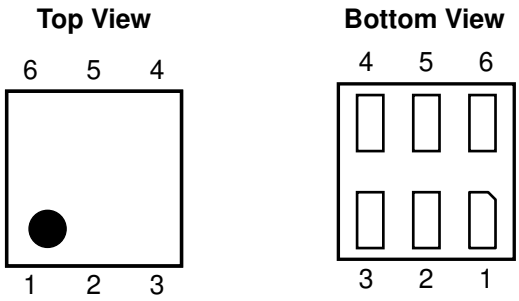

● **SC-88A**

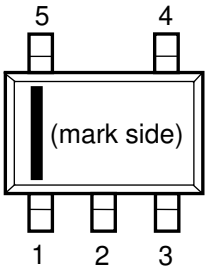

● **SOT-23-5**

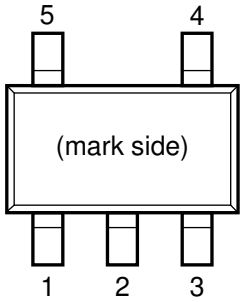

- **WLCSP-4-P5**

Pin No	Symbol	Pin Description
A1	V_{DD}	Input Pin
A2	V_{OUT}	Output Pin
B1	CE	Chip Enable Pin ("H" Active)
B2	GND	Ground Pin

- **DFN(PL)1212-6**

Pin No	Symbol	Pin Description
1	AE	Auto ECO Pin
2	GND	Ground Pin
3	CE	Chip Enable Pin ("H" Active)
4	V_{DD}	Input Pin
5	NC	No Connection
6	V_{OUT}	Output Pin

- **SC-88A**

Pin No	Symbol	Pin Description
1	AE	Auto ECO Pin
2	GND	Ground Pin
3	V_{OUT}	Output Pin
4	V_{DD}	Input Pin
5	CE	Chip Enable Pin ("H" Active)

- **SOT-23-5**

Pin No	Symbol	Pin Description
1	V_{DD}	Input Pin
2	GND	Ground Pin
3	CE	Chip Enable Pin ("H" Active)
4	AE	Auto ECO Pin
5	V_{OUT}	Output Pin

ABSOLUTE MAXIMUM RATINGS

Symbol	Item	Rating	Unit
V_{IN}	Input Voltage	6.0	V
V_{CE}	Input Voltage (CE Pin)	−0.3 to 6.0	V
V_{AE}	Input Voltage (AE Pin)	−0.3 to 6.0	V
V_{OUT}	Output Voltage	−0.3 to V_{IN}+0.3	V
I_{OUT}	Output Current	400	mA
P_D	Power Dissipation (WLCSP-4-P5) *	278	mW
	Power Dissipation (DFN(PL)1212-6) *	400	
	Power Dissipation (SC-88A) *	380	
	Power Dissipation (SOT-23-5) *	420	
Topt	Operating Temperature Range	−40 to 85	°C
Tstg	Storage Temperature Range	−55 to 125	°C

∗) For Power Dissipation, please refer to PACKAGE INFORMATION.

ABSOLUTE MAXIMUM RATINGS

Electronic and mechanical stress momentarily exceeded absolute maximum ratings may cause the permanent damages and may degrade the life time and safety for both device and system using the device in the field. The functional operation at or over these absolute maximum ratings is not assured.

ELECTRICAL CHARACTERISTICS

V_{IN}=Set V_{OUT}+1V, I_{OUT}=1mA, C_{IN}=C_{OUT}=1µF, unless otherwise noted.
The specification in ☐ is checked and guaranteed by design engineering at –40°C ≦ Topt ≦ 85°C.

- **RP200x**

Topt=25°C

Symbol	Item	Conditions		Min.	Typ.	Max.	Unit
V_{OUT}	Output Voltage (Fast Mode)	I_{OUT}=5mA Topt=25°C	V_{OUT} > 2.0V	×0.99		×1.01	V
			V_{OUT} ≤ 2.0V	–20		20	mV
		I_{OUT}=5mA –40°C ≤ Topt ≤ 85°C	V_{OUT} > 2.0V	×0.975		×1.015	V
			V_{OUT} ≤ 2.0V	–50		30	mV
I_{OUT}	Output Current			300			mA
ΔV_{OUT} /ΔI_{OUT}	Load Regulation	1mA ≤ I_{OUT} ≤ 10mA	V_{OUT} > 2.0V	–1.0		1.0	%
			V_{OUT} ≤ 2.0V	–20		20	mV
		10mA ≤ I_{OUT} ≤ 300mA			35	80	mV
V_{DIF}	Dropout Voltage	I_{OUT}=300mA	0.8V ≤ V_{OUT} < 0.9V		0.62	0.85	V
			0.9V ≤ V_{OUT} < 1.0V		0.55	0.78	
			1.0V ≤ V_{OUT} < 1.5V		0.48	0.70	
			1.5V ≤ V_{OUT} < 2.6V		0.34	0.50	
			2.6V ≤ V_{OUT} ≤ 4.0V		0.23	0.35	
I_{SS1}	Supply Current (Low Power Mode) *1	I_{OUT}=0mA	V_{OUT} ≤ 1.85V		1.0	4.0	µA
			V_{OUT} > 1.85V		1.5	4.0	
I_{SS2}	Supply Current (Fast Mode)	I_{OUT}=10mA			55		µA
Istandby	Standby Current	V_{CE}=GND			0.1	1.0	µA
I_{OUTH}	Fast Mode switch-over current	I_{OUT}=Light load to Heavy load				8.0	mA
I_{OUTL}	Low Power Mode switch-over current	I_{OUT}=Heavy load to Light load		1.0	2.0		mA
ΔV_{OUT} /ΔV_{IN}	Line Regulation	V_{OUT}+0.5V≤V_{IN}≤5.0V, V_{IN} ≥ 1.4V	I_{OUT}=1mA (Low Power Mode)			0.50	%/V
			I_{OUT}=10mA (Fast Mode)		0.02	0.20	
RR	Ripple Rejection (Fast Mode)	f=1kHz, Ripple 0.2Vp-p V_{IN}=V_{OUT}+1V, I_{OUT}=30mA (In case that V_{OUT} ≤ 1.2V, V_{IN}=2.2V)			70		dB
V_{IN}	Input Voltage*2			1.40		5.25	V
ΔV_{OUT} /ΔTopt	Output Voltage Temperature Coefficient	–40°C ≤ Topt ≤ 85°C			±50		ppm /°C
I_{SC}	Short Current Limit	V_{OUT}=0V			50		mA
I_{CEPD}	CE Pull-down Constant Current				0.1		µA
V_{CEH}	CE Input Voltage "H"			1.0			V

Symbol	Item	Conditions	Min.	Typ.	Max.	Unit
V_{CEL}	CE Input Voltage "L"				0.4	V
I_{AEPD}	AE Pull-down Constant Current*3			0.1		μA
V_{AEH}	AE Input Voltage "H"*3		1.0			V
V_{AEL}	AE Input Voltage "L"*3				0.4	V
R_{LOW}	Low Output Nch Tr. ON Resistance (of D version)	V_{IN}=4.0V, V_{CE}=0V		50		Ω

All of units are tested and specified under load conditions such that Tj≈T_{opt}=25°C except for Ripple Rejection, Output Voltage Temperature Coefficient.

∗1) The value of supply current is excluding the Pull-down constant current of CE Pin and AE Pin.
∗2) The maximum Input Voltage of the ELECTRICAL CHARACTERISTICS is 5.25V. In case of exceeding this specification, the IC must be operated on condition that the Input Voltage is up to 5.5V and the total operating time is within 500hrs.
∗3) Applied to RP200K/N/Q

RECOMMENDED OPERATING CONDITIONS (ELECTRICAL CHARACTERISTICS)

All of electronic equipment should be designed that the mounted semiconductor devices operate within the recommended operating conditions. The semiconductor devices cannot operate normally over the recommended operating conditions, even if when they are used over such conditions by momentary electronic noise or surge. And the semiconductor devices may receive serious damage when they continue to operate over the recommended operating conditions.

TYPICAL APPLICATION

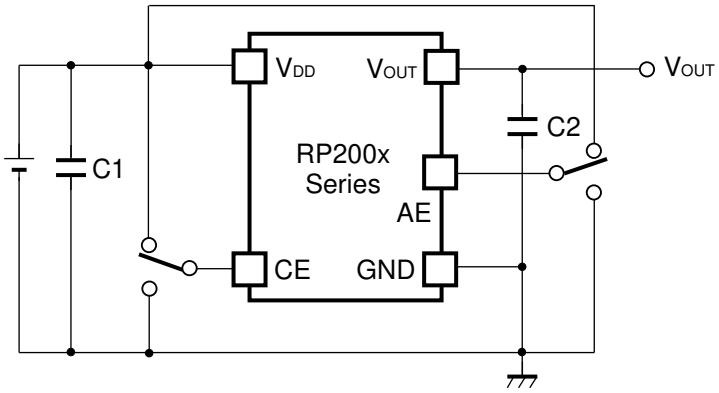

(External Components)
C1, C2 : Ceramic Capacitor 1.0µF MURATA: GRM155B31A105KE15

TECHNICAL NOTES

When using these ICs, consider the following points:

Phase Compensation

In these ICs, phase compensation is made for securing stable operation even if the load current is varied. For this purpose, use a capacitor C2 with 1.0µF or more and good ESR (Equivalent Series Resistance).
(Note: If additional ceramic capacitors are connected with parallel to the output pin with an output capacitor for phase compensation, the operation might be unstable. Because of this, test these ICs with as same external components as ones to be used on the PCB.)

PCB Layout

Make V_{DD} and GND lines sufficient. If their impedance is high, noise pickup or unstable operation may result. Connect a capacitor C1 with a capacitance value as much as 1.0µF or more between V_{DD} and GND pin, and as close as possible to the pins.

Set external components, especially the output capacitor C2, as close as possible to the ICs, and make wiring as short as possible.

Impedance of Input Pin (CE Pin and AE Pin)

In those ICs, there is a pull-down constant current in the CE Pin and the AE Pin.
However, if those pins are floating and wired long that produce the noise environment, it might miss-operation of ICs. For this purpose, please make sure enough evaluation of ICs.

TEST CIRCUITS

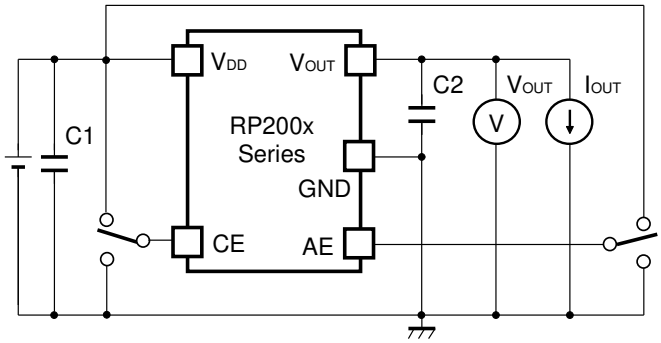

Basic Test Circuit

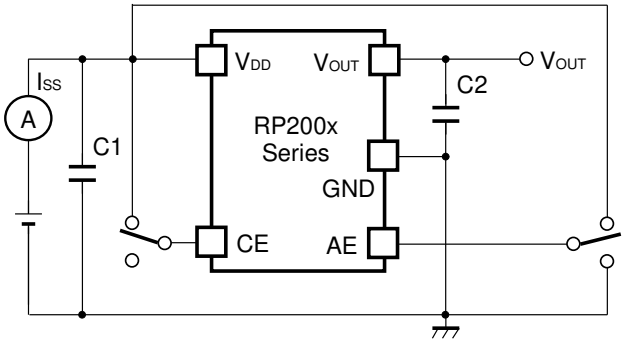

Test Circuit for Supply Current

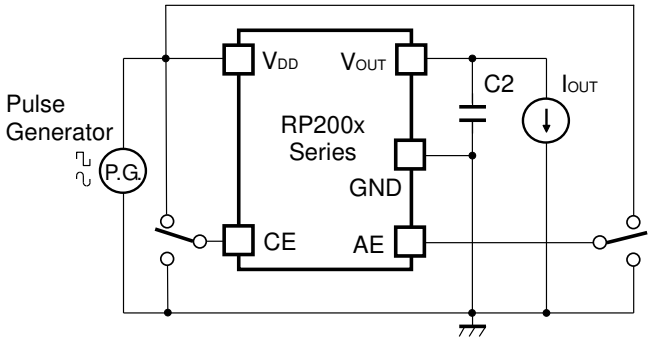

Test Circuit for Ripple Rejection

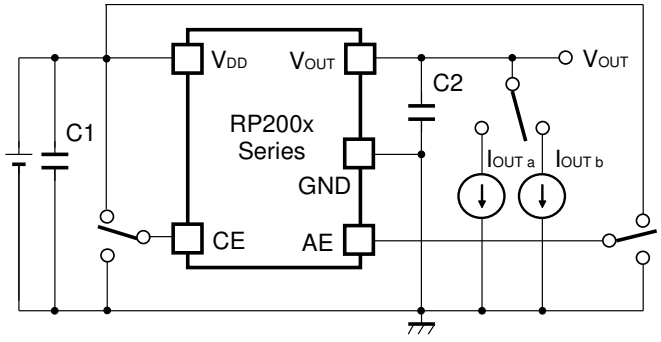

Test Circuit for Load Transient Response

TYPICAL CHARACTERISTICS

1) Output Voltage vs. Output Current (C1=1.0µF, C2=1.0µF, Topt=25°C)

RP200x08xx

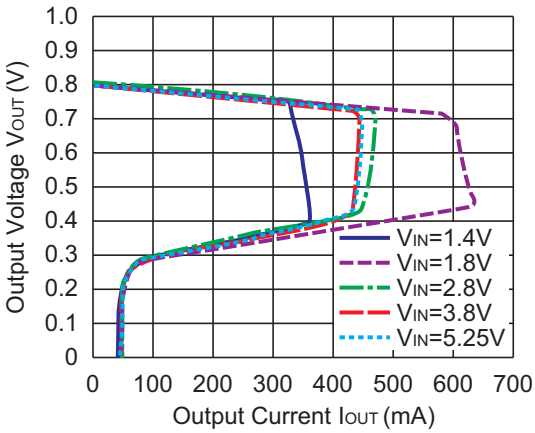

RP200x18xx

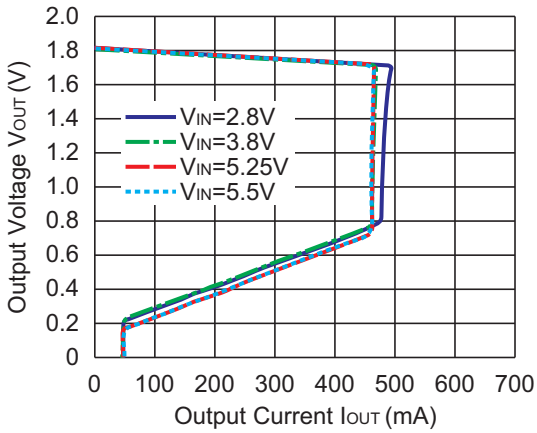

RP200x28xx

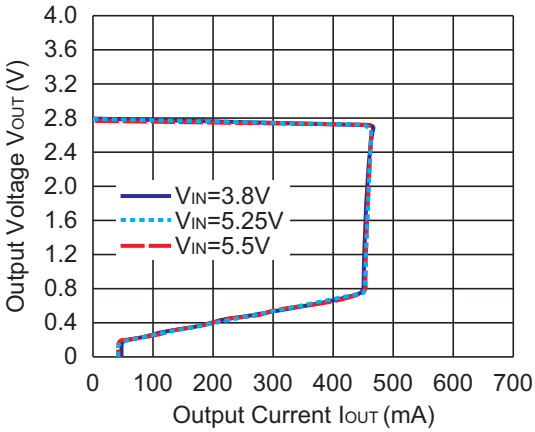

RP200x40xx

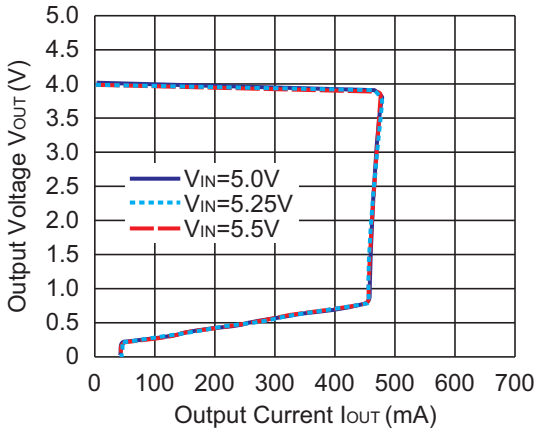

2) Output Voltage vs. Input Voltage (C1=1.0µF, C2=1.0µF, Topt=25°C)

RP200x08xx

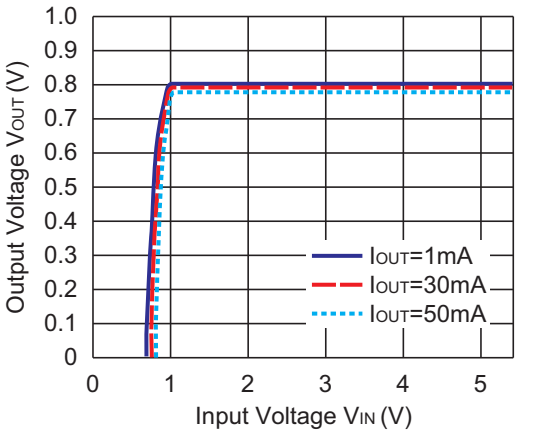

RP200x18xx

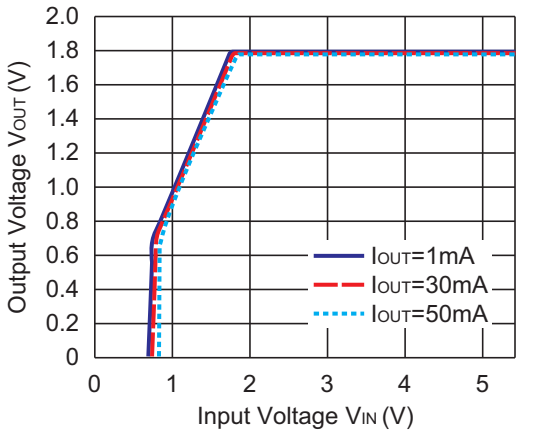

RP200x28xx

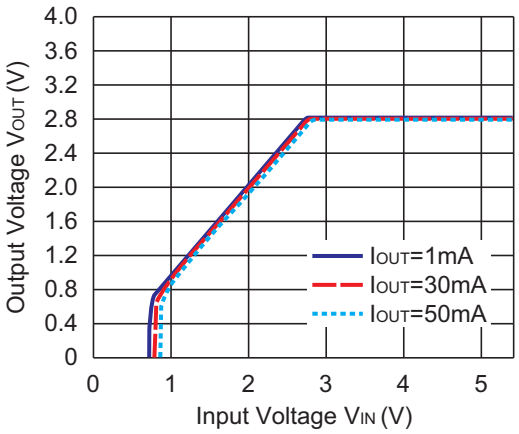

RP200x40xx

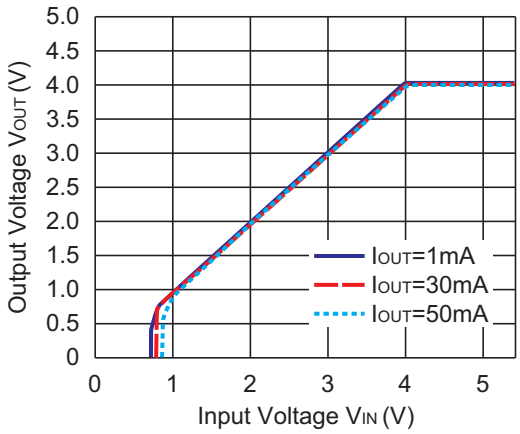

3) Supply Current vs. Input Voltage (C1=1.0µF, C2=1.0µF, Topt=25°C)

RP200x08xx

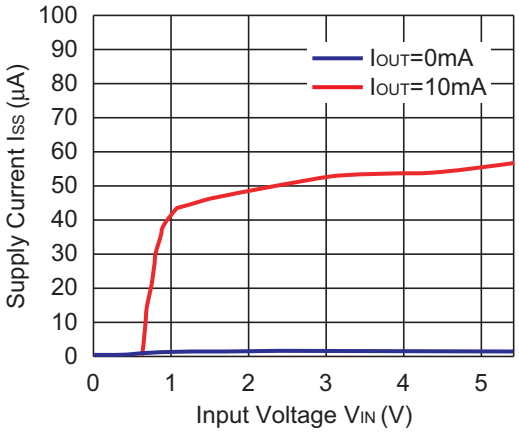

RP200x18xx

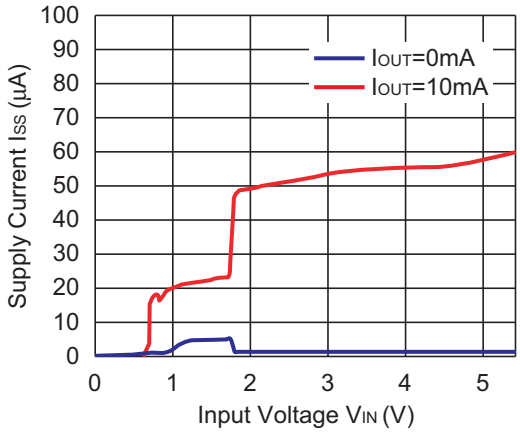

RP200x28xx

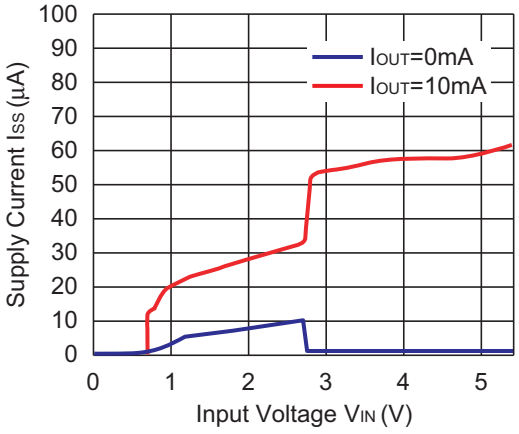

RP200x40xx

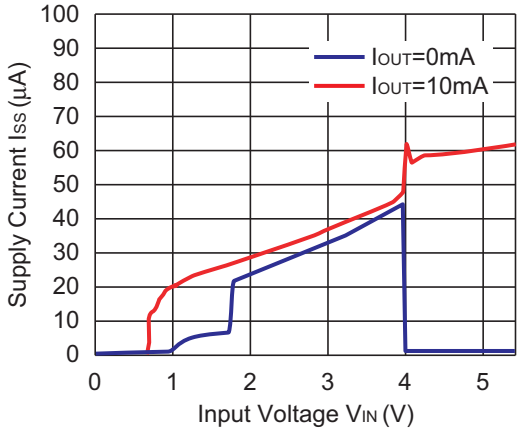

4) Supply Current vs. Output Current (C1=1.0µF, C2=1.0µF, Topt=25°C)

RP200x08xx

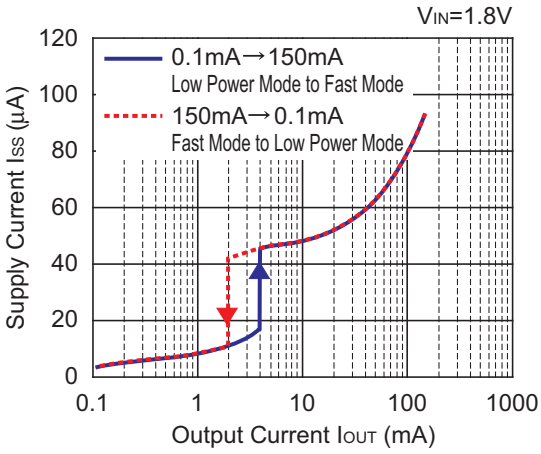

RP200x18xx

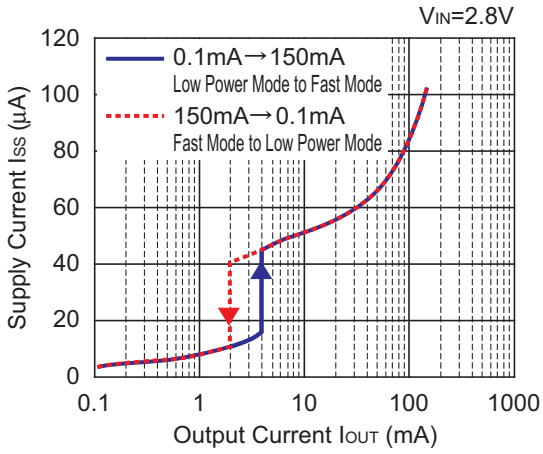

RP200x28xx

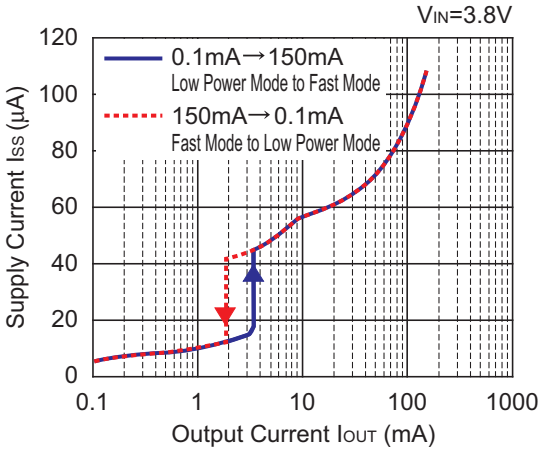

RP200x40xx

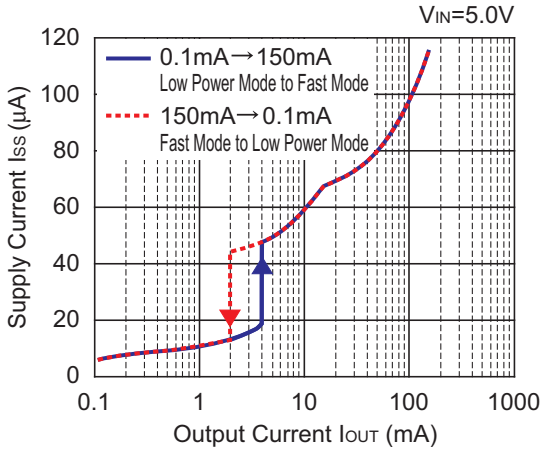

5) Output Voltage vs. Temperature (C1=1.0µF, C2=1.0µF, IOUT=5mA)

RP200x08xx

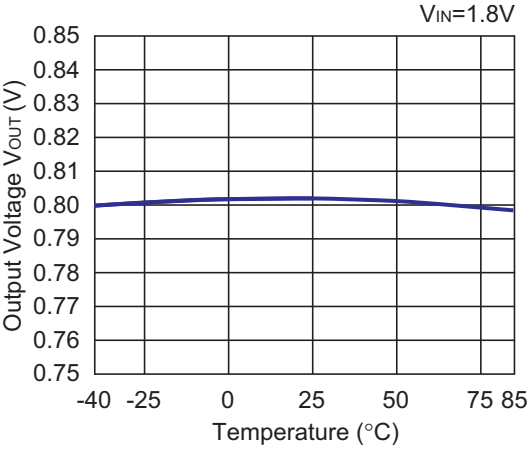

RP200x18xx

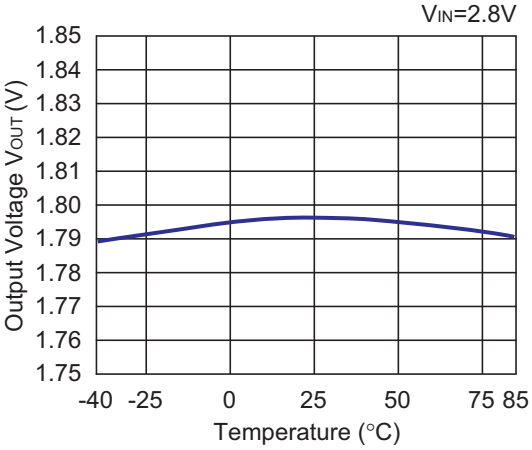

RP200x28xx

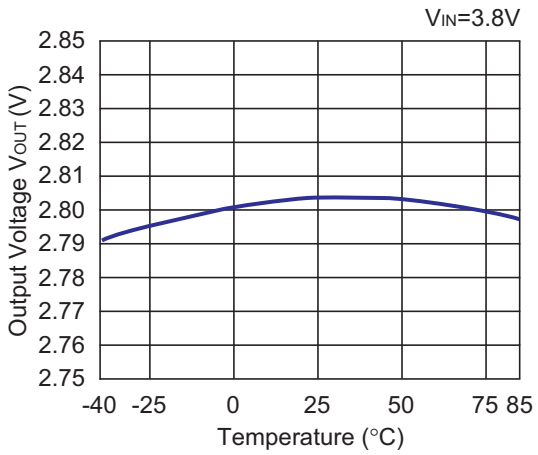

RP200x40xx

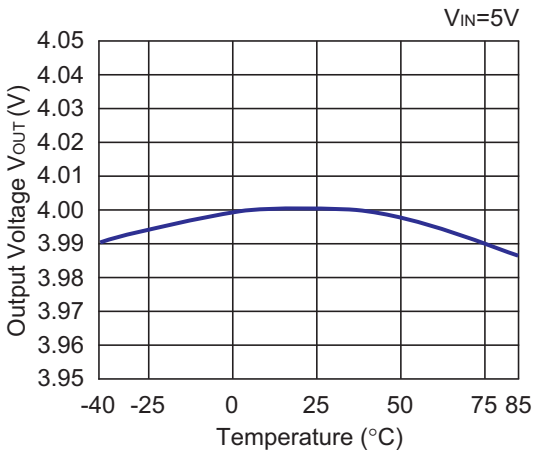

6) Supply Current vs. Temperature (C1=1.0µF, C2=1.0µF)

RP200x08xx
(Auto ECO Low Power Mode)

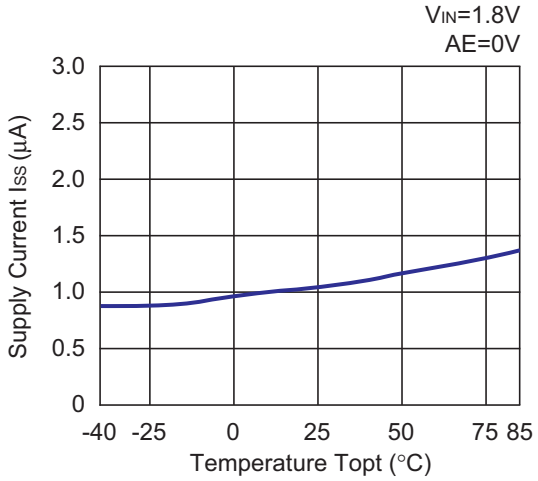

RP200x18xx
(Auto ECO Low Power Mode)

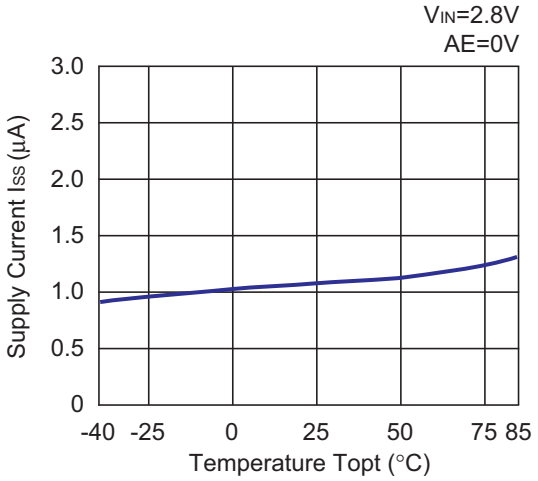

RP200x28xx
(Auto ECO Low Power Mode)

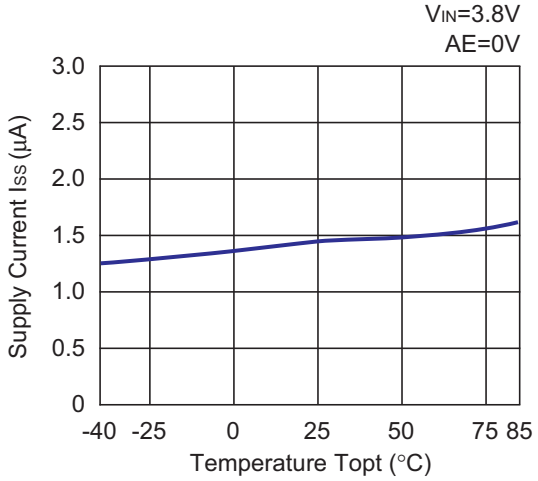

RP200x40xx
(Auto ECO Low Power Mode)

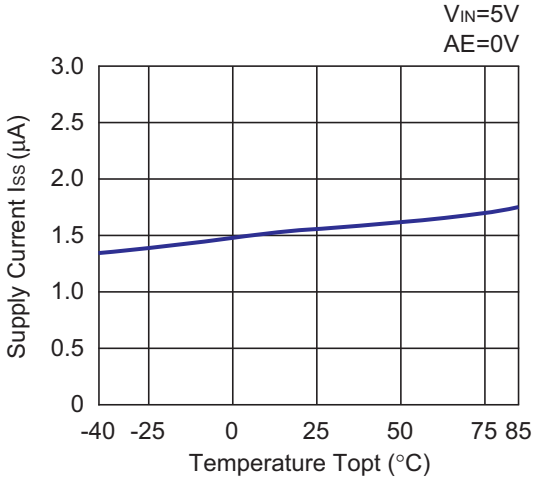

RP200x08xx (Fixed Fast Mode)

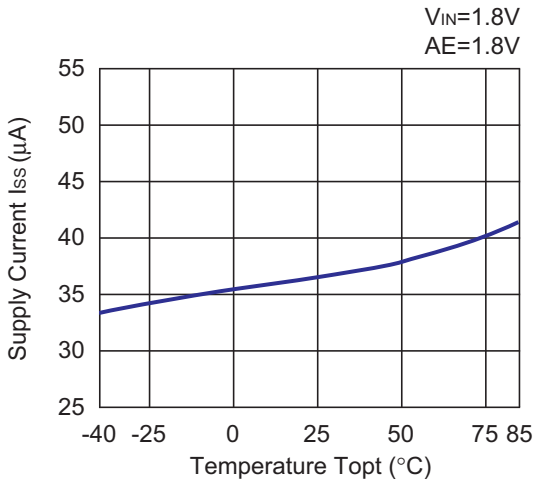

RP200x18xx (Fixed Fast Mode)

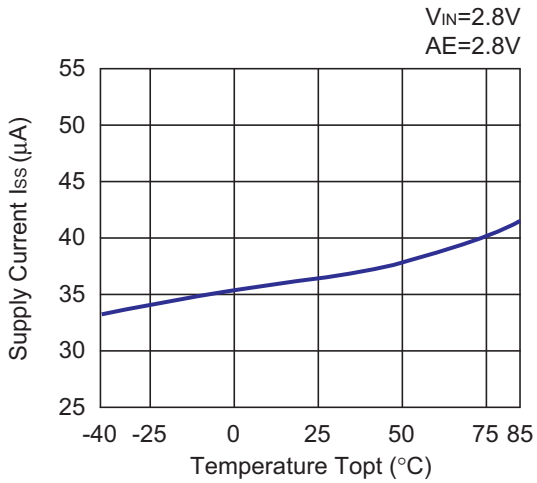

RP200x28xx (Fixed Fast Mode)

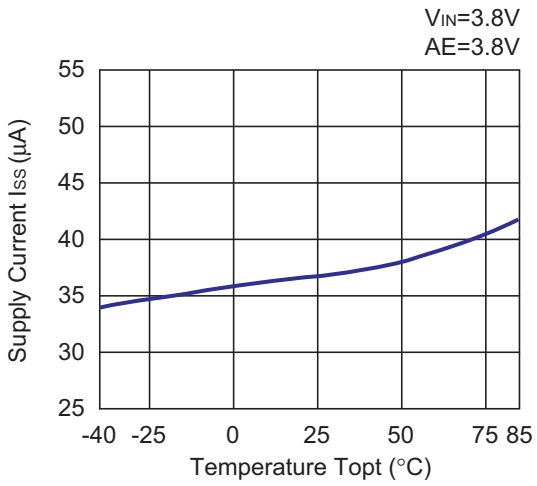

RP200x40xx (Fixed Fast Mode)

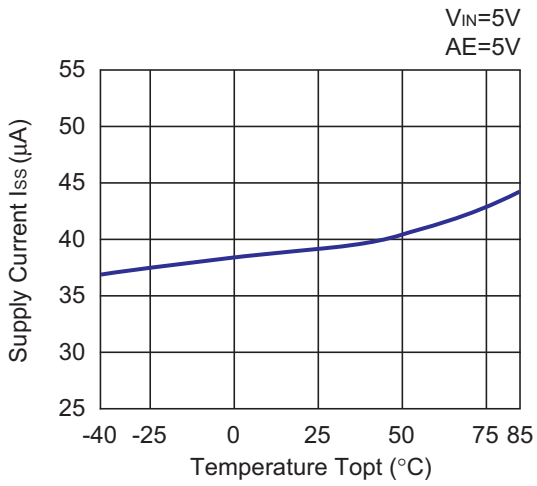

7) Dropout Voltage vs. Output Current (C1=1.0µF, C2=1.0µF)

RP200x08xx

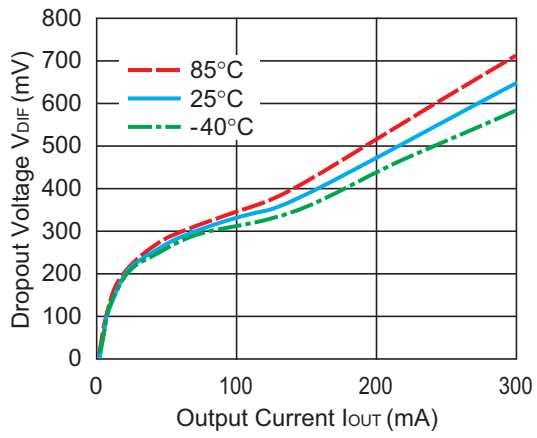

RP200x09xx

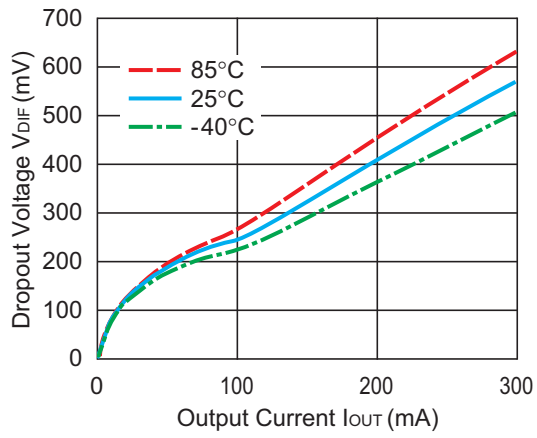

RP200x10xx

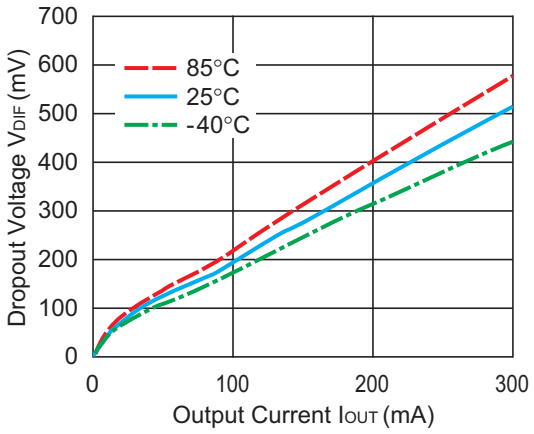

RP200x15xx

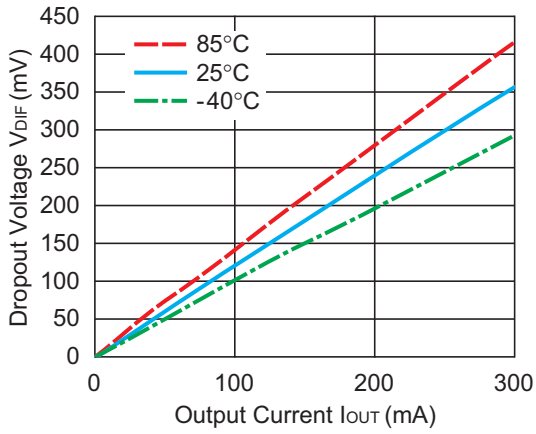

RP200x26xx

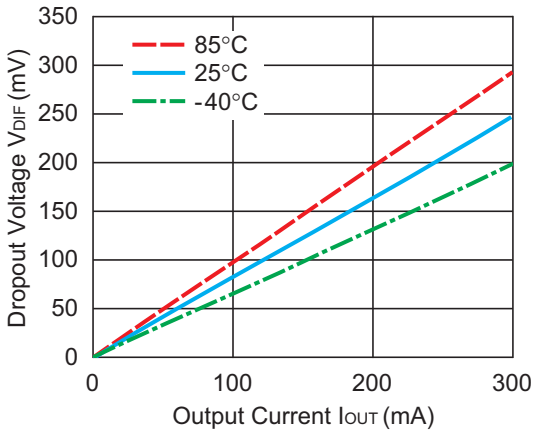

RP200x40xx

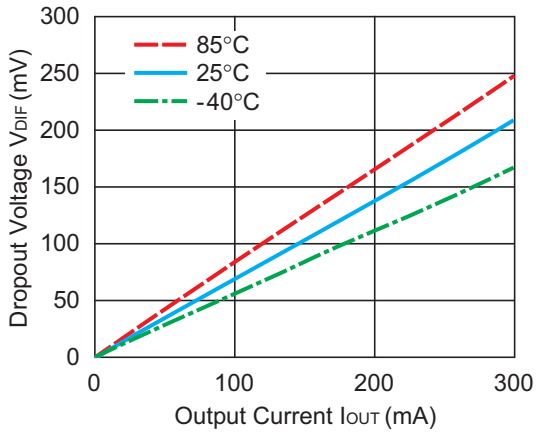

8) Dropout Voltage vs Set Output Voltage

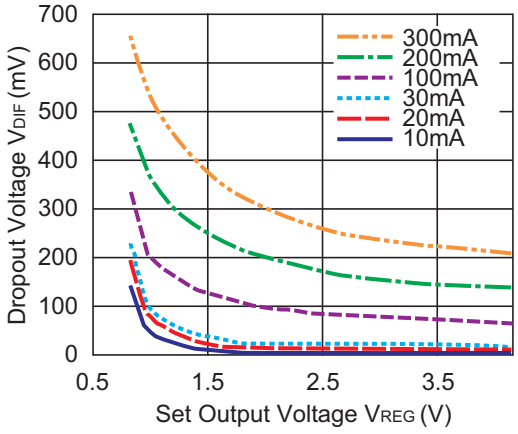

9) Ripple Rejection vs. Input Bias Voltage (C1=none, C2=1.0µF, Ripple=0.2Vp-p, Topt=25°C)

RP200x28xx
(Auto ECO Low Power Mode)
IOUT=1mA
AE=0V

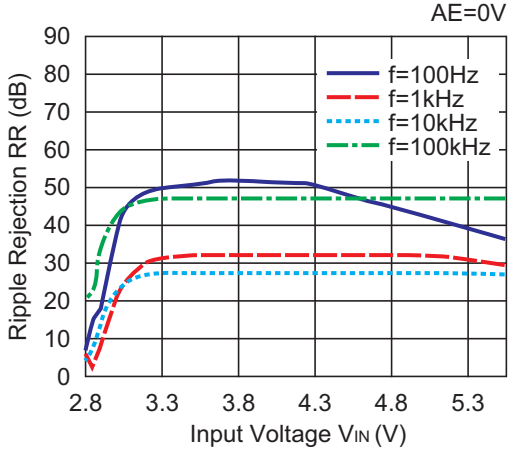

RP200x28xx
(Fixed Fast Mode)
IOUT=1mA
AE=Set VOUT+1V

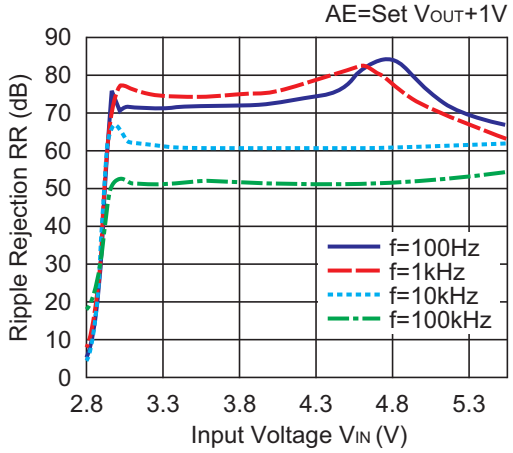

RP200x28xx
(Auto ECO Fast Mode)
IOUT=30mA
AE=0V

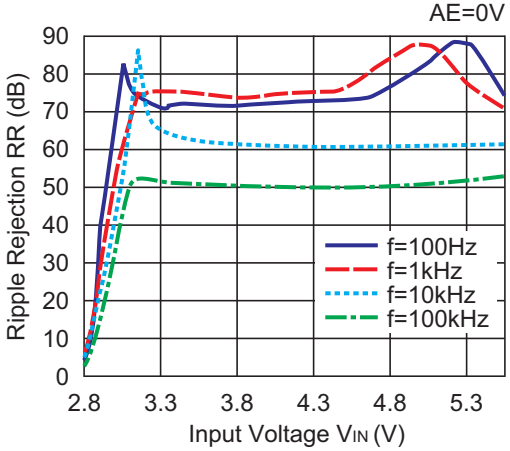

RP200x28xx
(Auto ECO Fast Mode)
IOUT=50mA
AE=0V

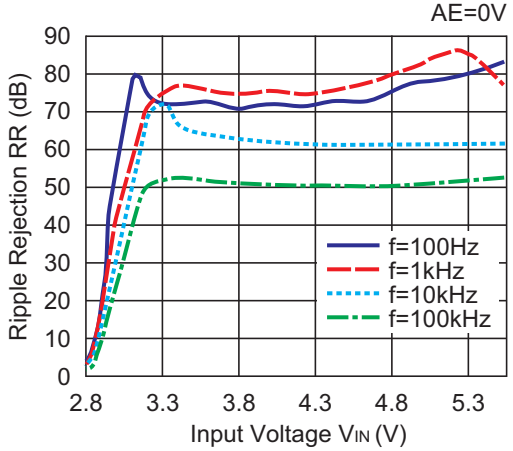

10) Ripple Rejection vs. Frequency (C1=none, C2=1.0µF, Ripple=0.2Vp-p, Topt=25°C)

RP200x08xx
VIN=1.8V+0.2Vp-p

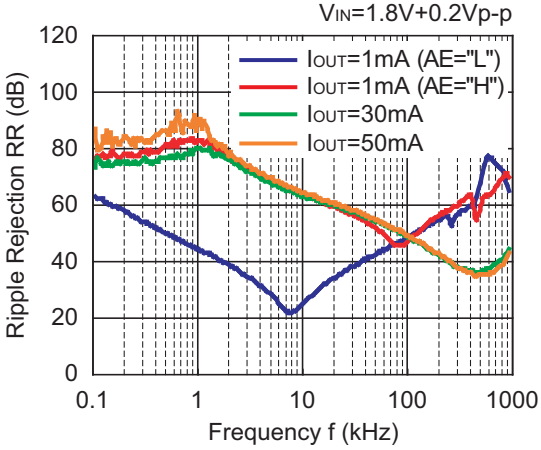

RP200x18xx
VIN=2.8V+0.2Vp-p

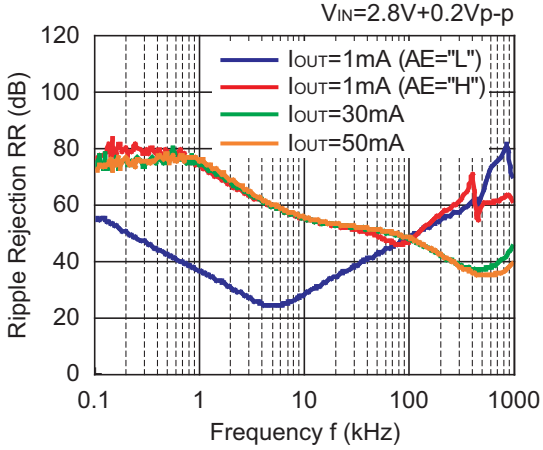

RP200x28xx

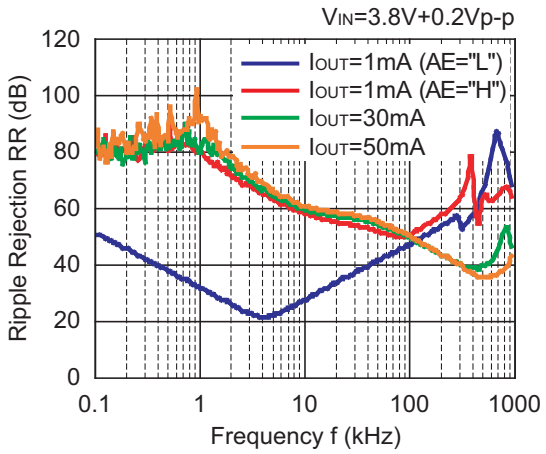

RP200x40xx

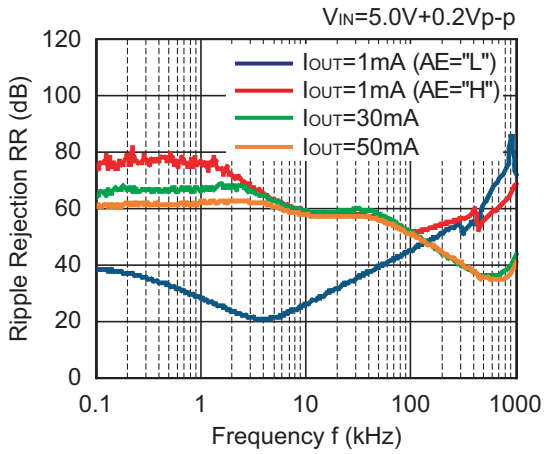

11) Input Transient Response (C1=none, C2=1.0µF, tr=tf=5µs, Topt=25°C)

RP200x08xx
(Auto ECO Low Power Mode)

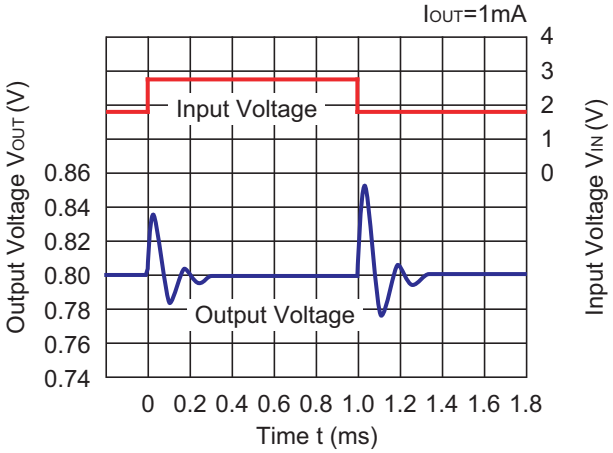

RP200x18xx
(Auto ECO Low Power Mode)

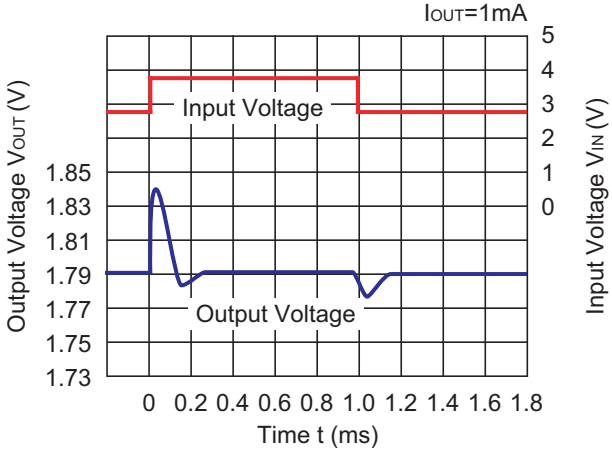

RP200x28xx
(Auto ECO Low Power Mode)

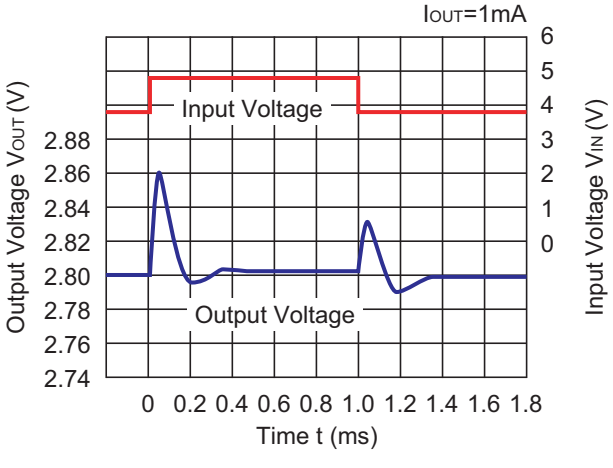

RP200x40xx
(Auto ECO Low Power Mode)

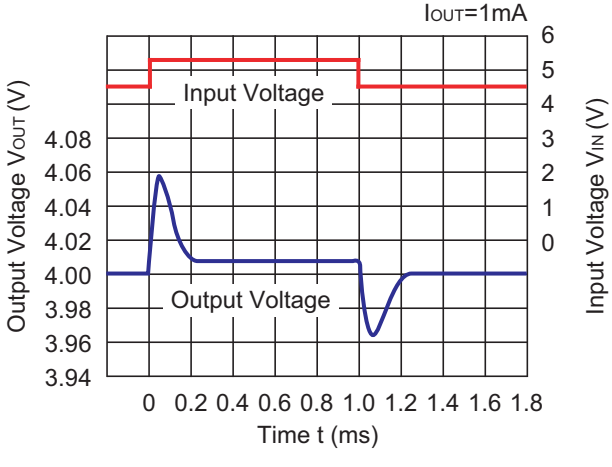

RP200x08xx (Fixed Fast Mode)

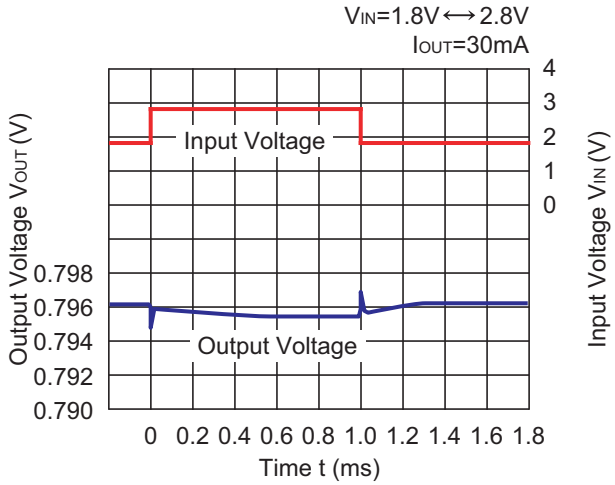

RP200x18xx (Fixed Fast Mode)

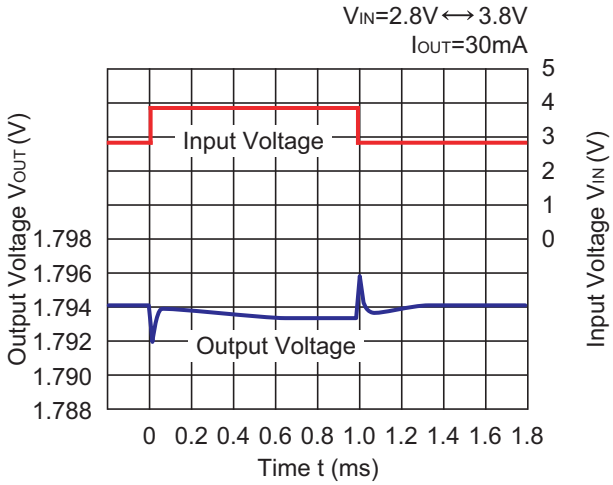

RP200x28xx (Fixed Fast Mode)

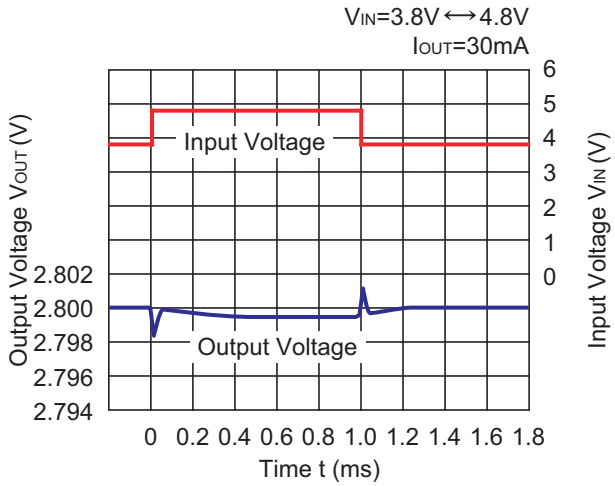

RP200x40xx (Fixed Fast Mode)

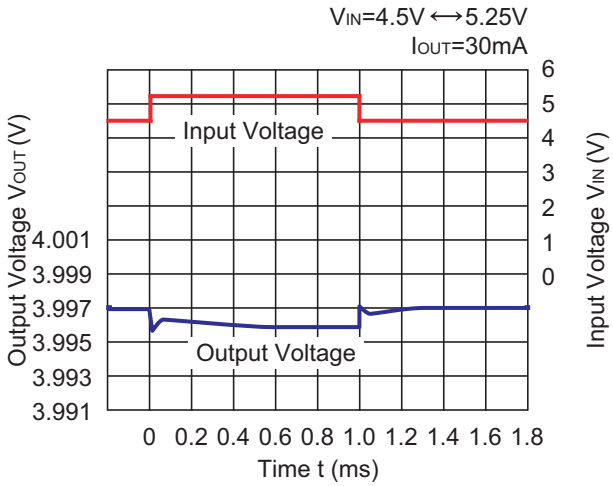

12) Load Transient Response (C1=1.0µF, C2=1.0µF, tr=tf=0.5µs, Topt=25°C)

RP200x08xx
Auto ECO (Low Power Mode↔Fast Mode)

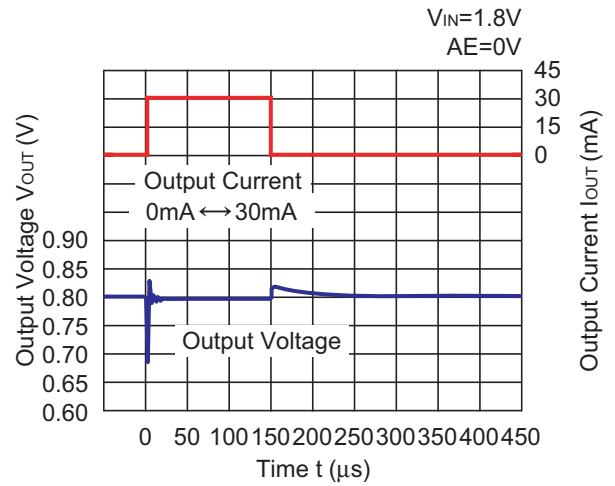

RP200x18xx
Auto ECO (Low Power Mode↔Fast Mode)

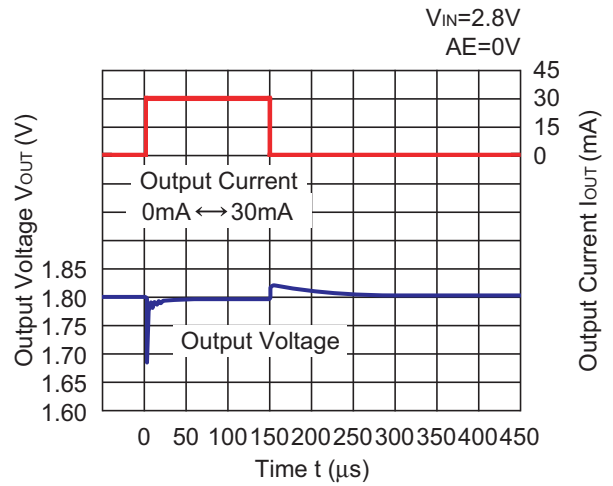

RP200x08xx
(Auto ECO Fast Mode)

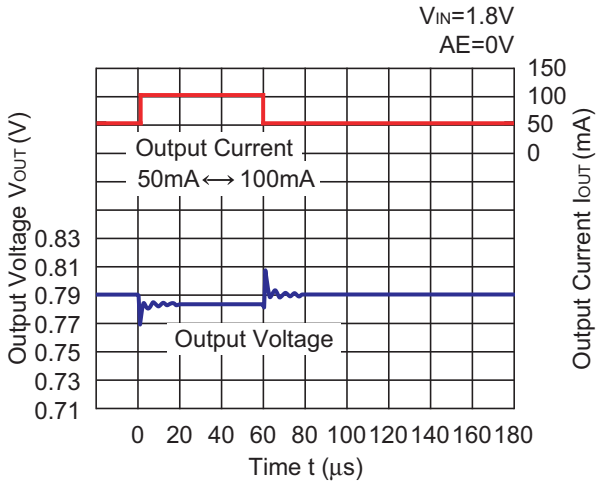

RP200x18xx
(Auto ECO Fast Mode)

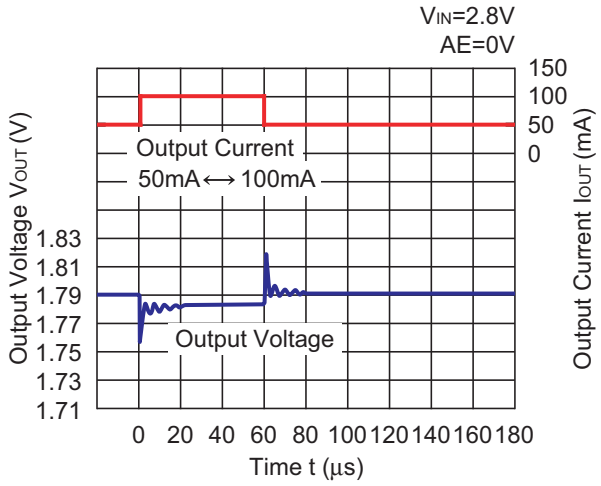

RP200x08xx
(Fixed Fast Mode)

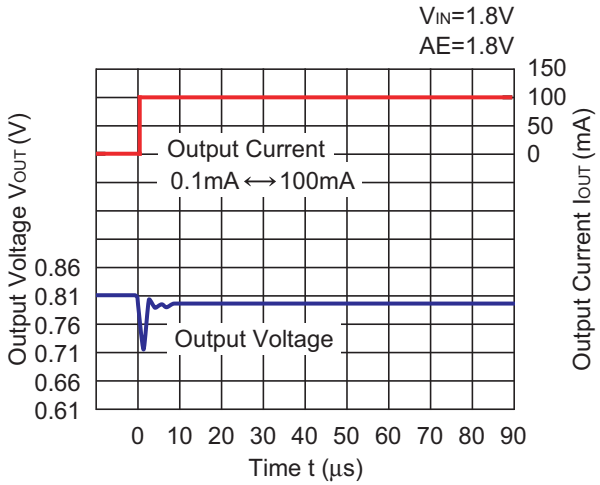

RP200x18xx
(Fixed Fast Mode)

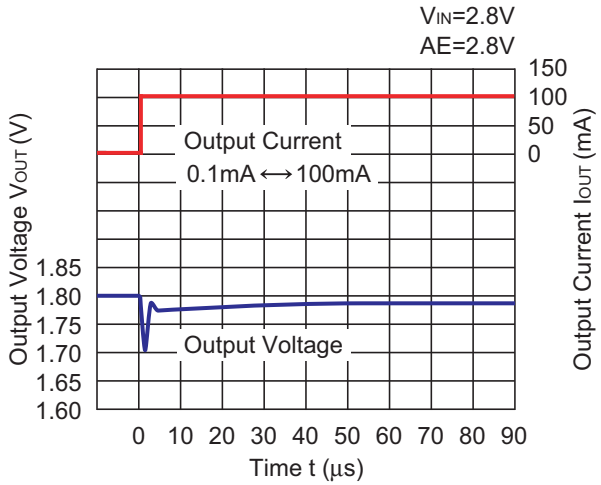

RP200x08xx
Auto ECO (Low Power Mode→Fast Mode)

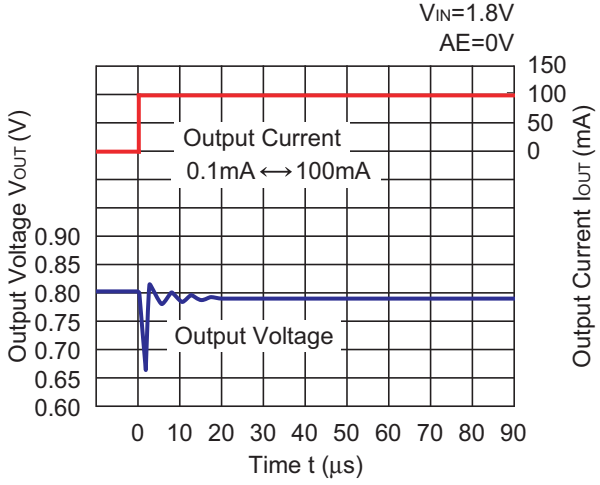

RP200x18xx
Auto ECO (Low Power Mode→Fast Mode)

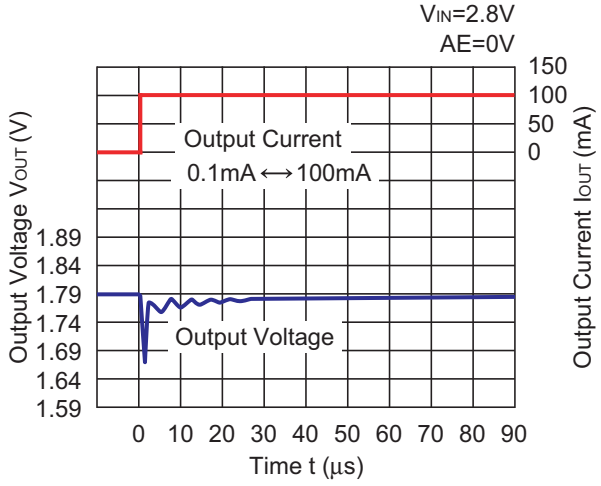

RP200x08xx
(Fixed Fast Mode)

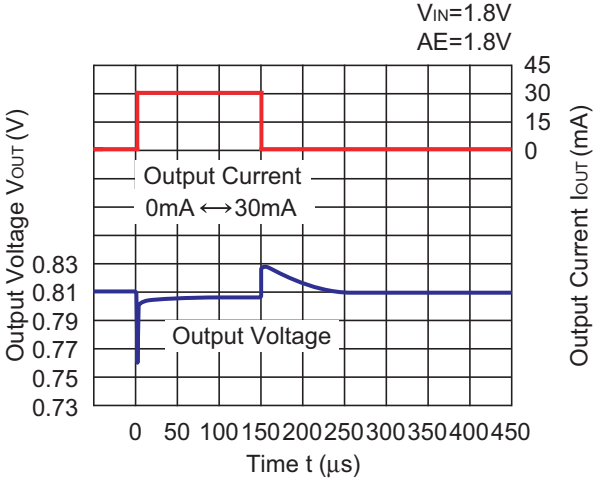

RP200x18xx
(Fixed Fast Mode)

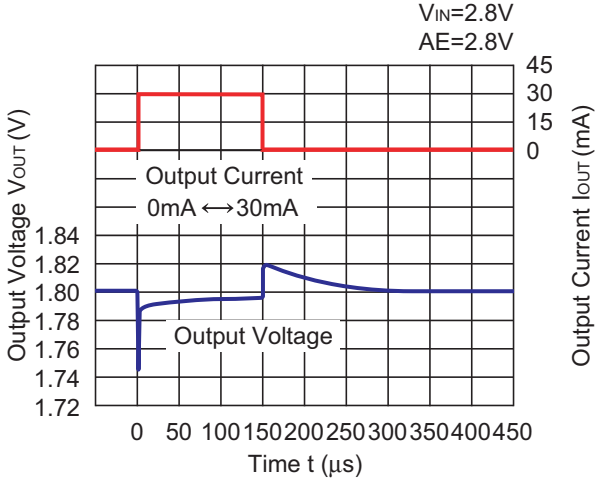

RP200x28xx
Auto ECO (Low Power Mode↔Fast Mode)

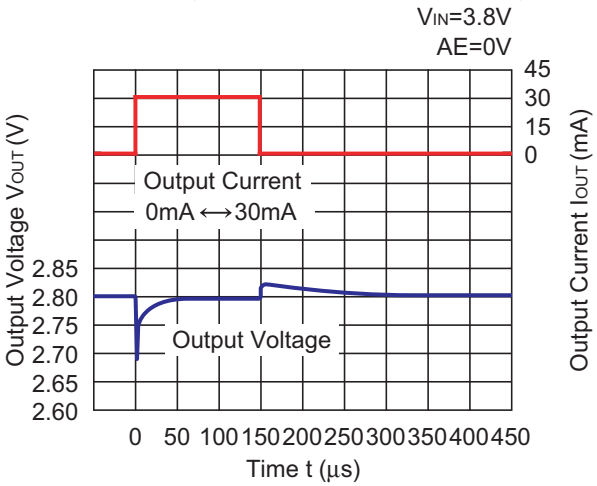

RP200x40xx
Auto ECO (Low Power Mode↔Fast Mode)

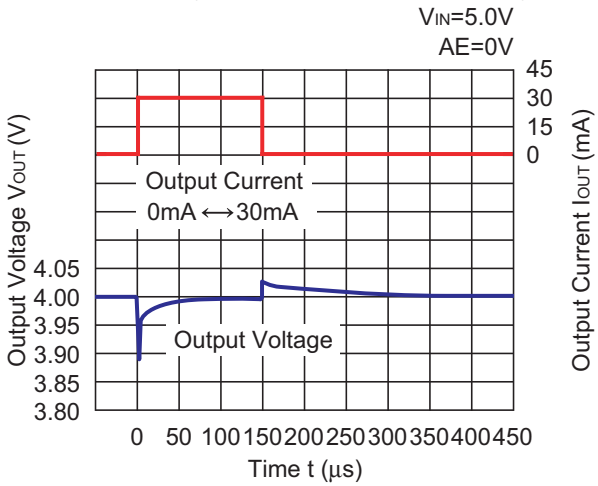

RP200x28xx
(Fixed Fast Mode)

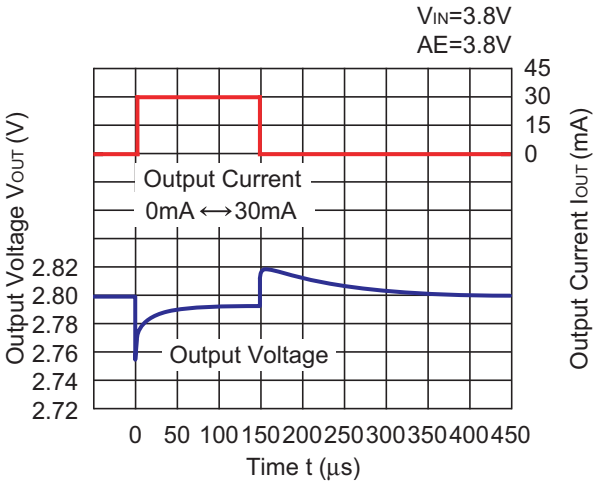

RP200x40xx
(Fixed Fast Mode)

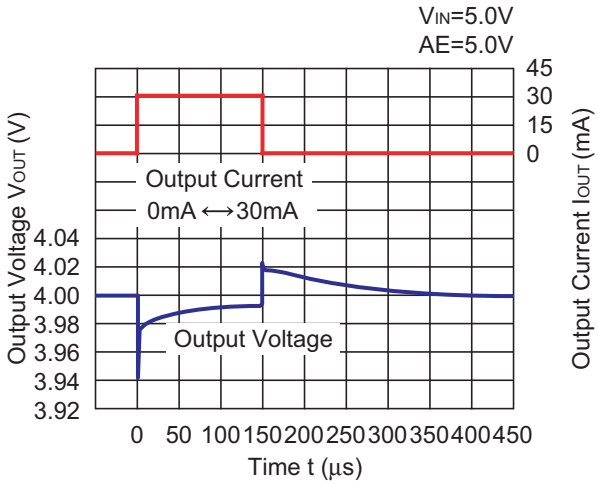

RP200x28xx
(Fixed Fast Mode)

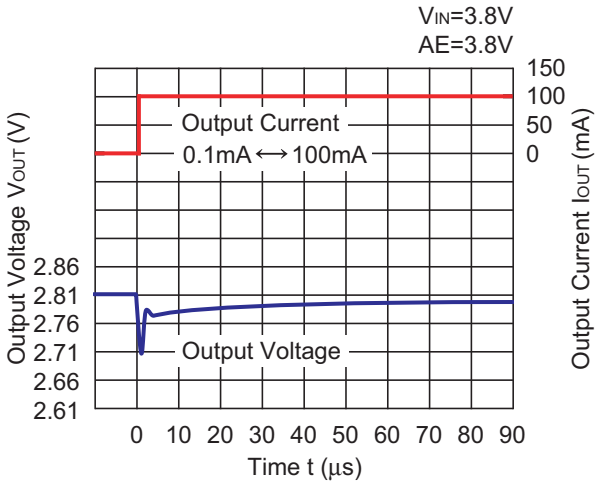

RP200x40xx
(Fixed Fast Mode)

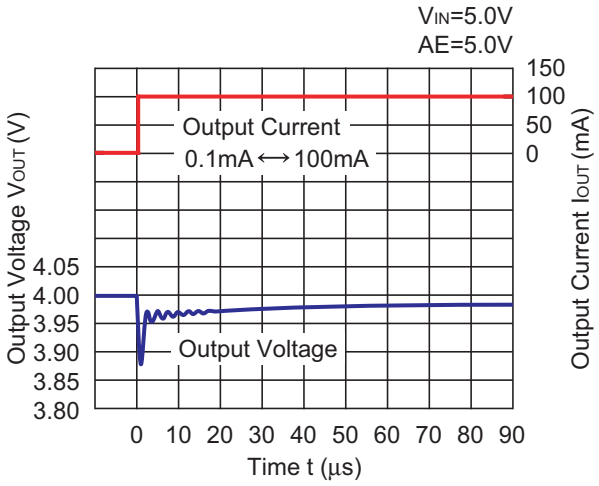

RP200x28xx
Auto ECO (Low Power Mode→Fast Mode)

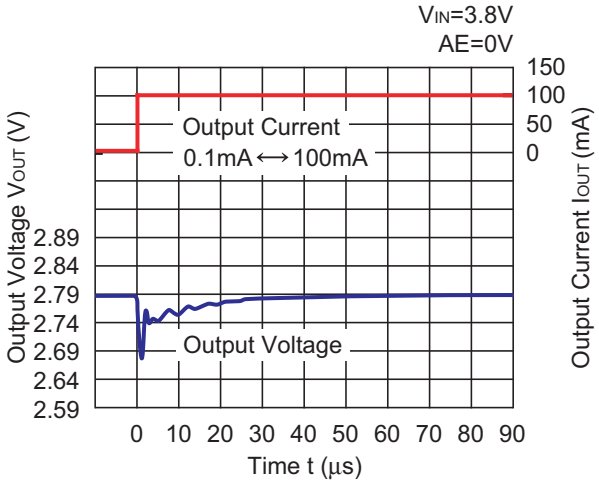

RP200x40xx
Auto ECO (Low Power Mode→Fast Mode)

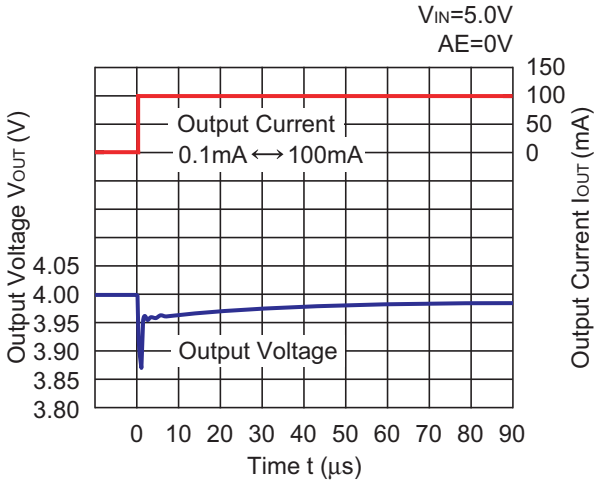

RP200x28xx
(Auto ECO Fast Mode)

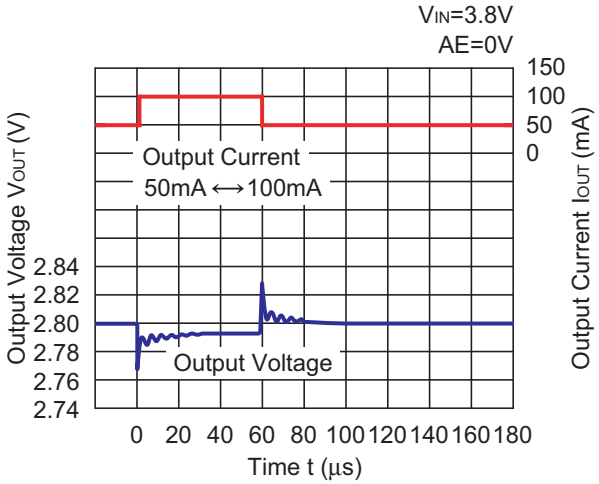

RP200x40xx
(Auto ECO Fast Mode)

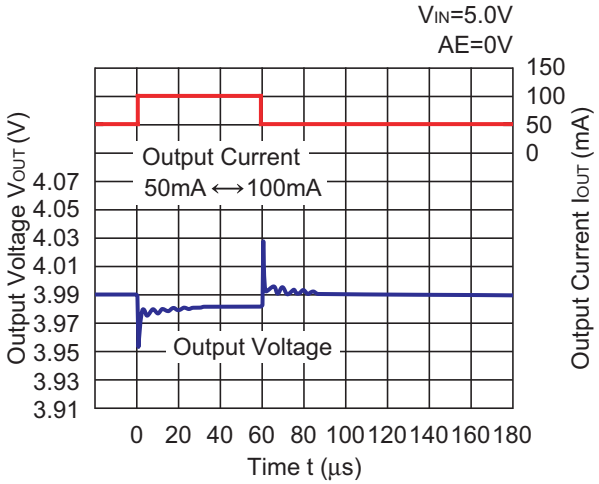

13) AE Switch Transient Response (C1=1.0µF, C2=1.0µF, tr=tf=0.5µs, Topt=25°C)

RP200x08xx

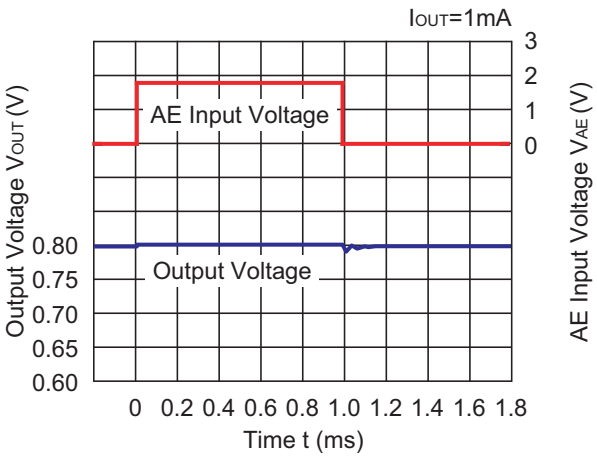

RP200x18xx

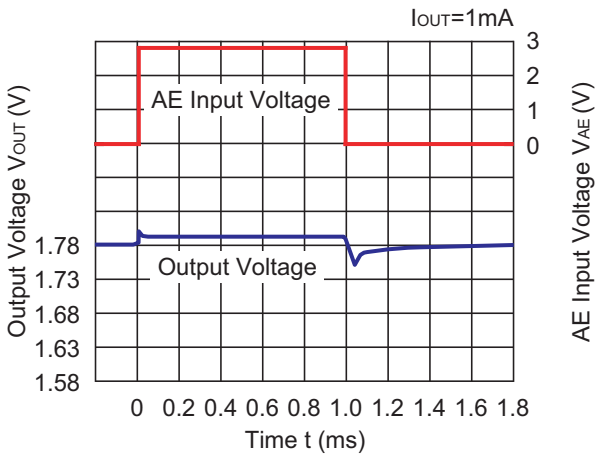

RP200x28xx

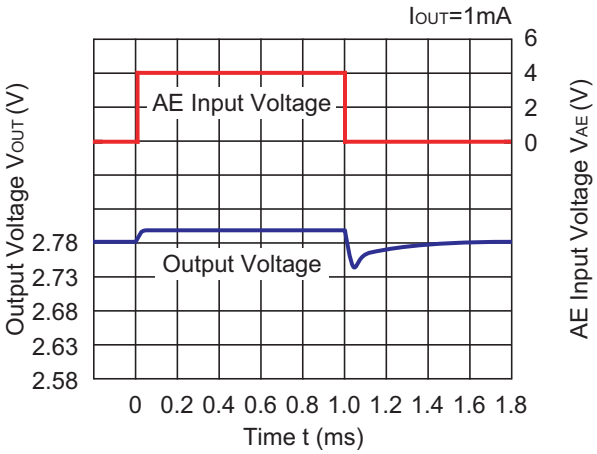

RP200x40xx

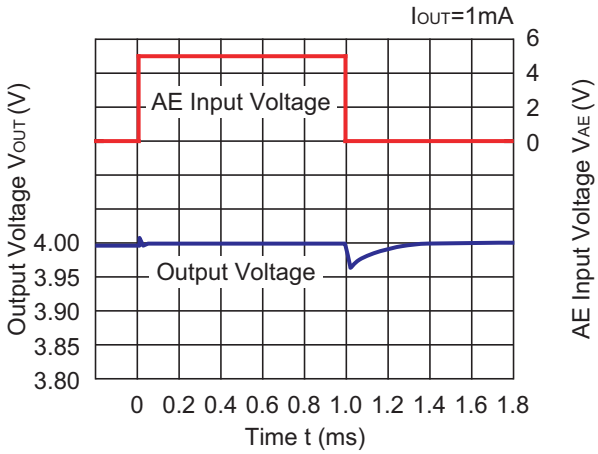

14) Turn On Speed with CE pin (C1=1.0µF, C2=1.0µF, Topt=25°C)

RP200x08xx

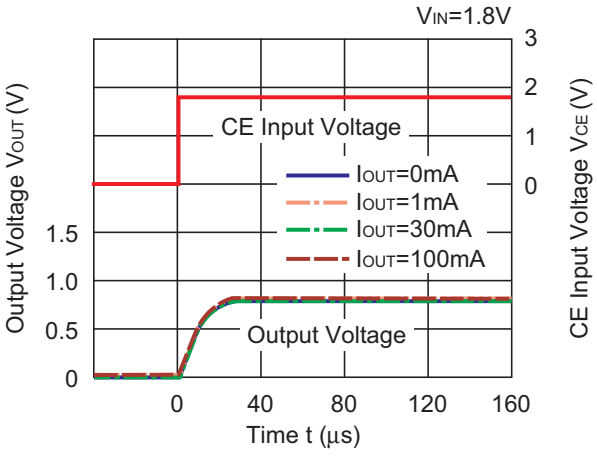

RP200x18xx

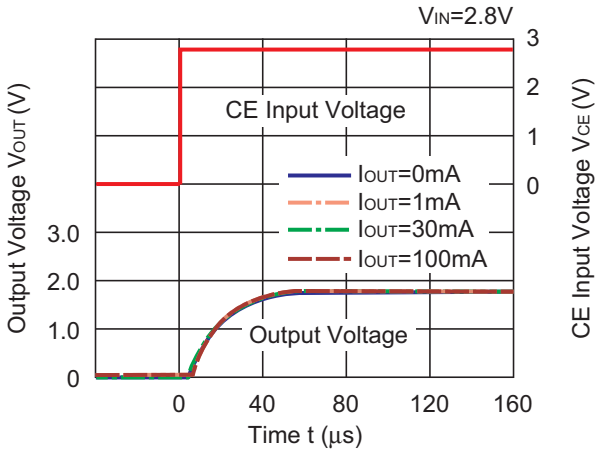

RP200x28xx

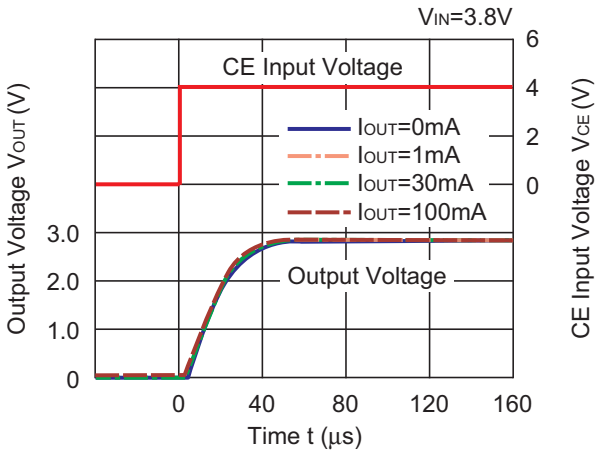

RP200x40xx

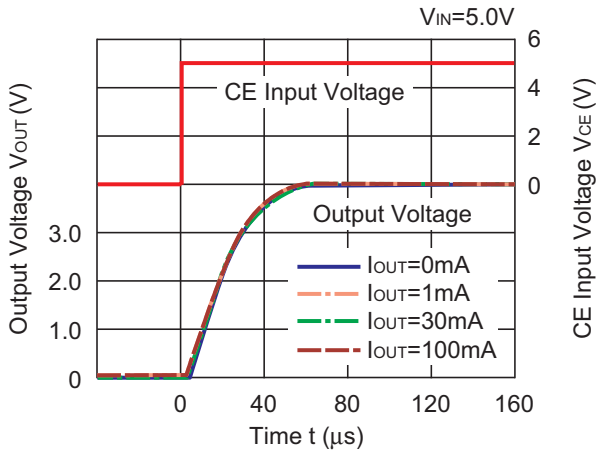

15) Turn Off Speed with CE pin (D Version) (C1=1.0µF, C2=1.0µF, Topt=25°C)

RP200x08xx

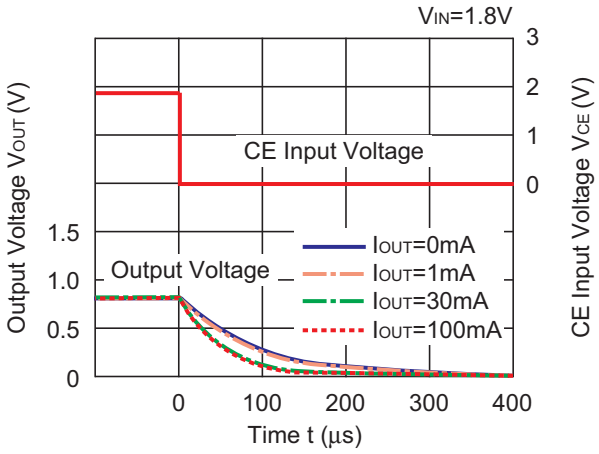

RP200x18xx

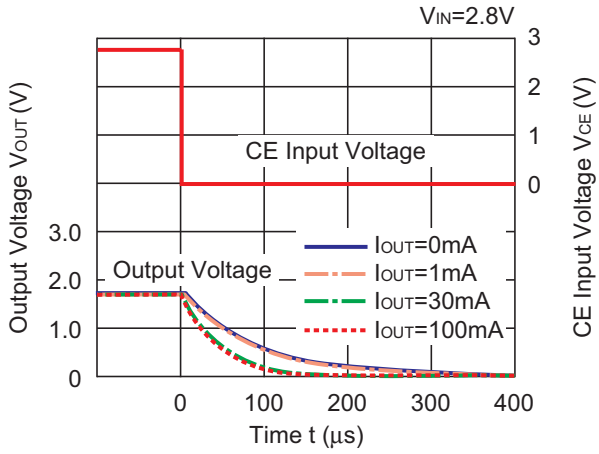

RP200x28xx

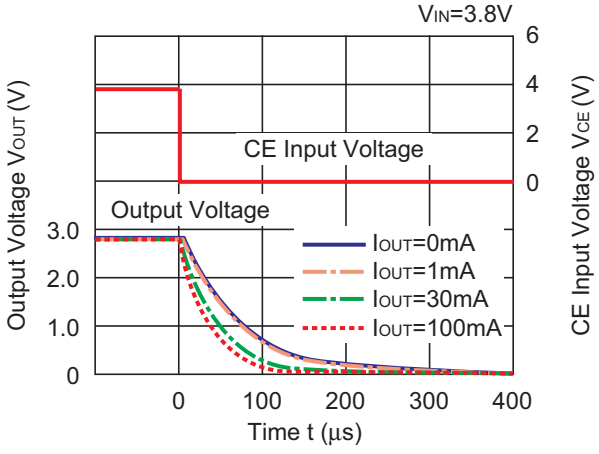

RP200x40xx

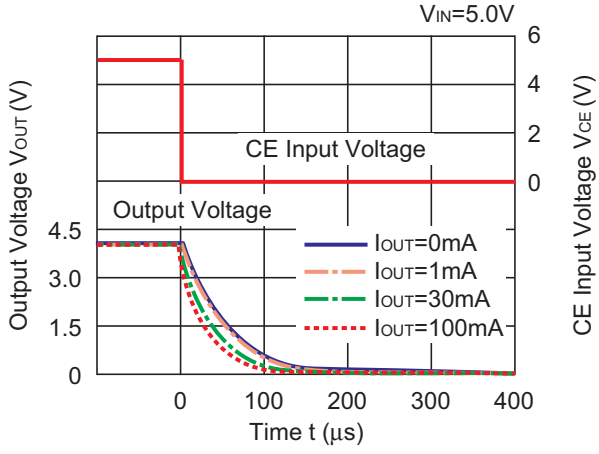

ESR vs. Output Current

Ceramic type output capacitor is recommended for this series; however, the other output capacitors with low ESR also can be used. The relations between I_{OUT} (Output Current) and ESR of an output capacitor are shown below. The conditions when the white noise level is under 40µV (Avg.) are marked as the hatched area in the graph.

Measurement conditions

Frequency Band: 10Hz to 2MHz
Temperature : –40°C to 85°C
C1, C2 : 1.0µF

RP200x08xx

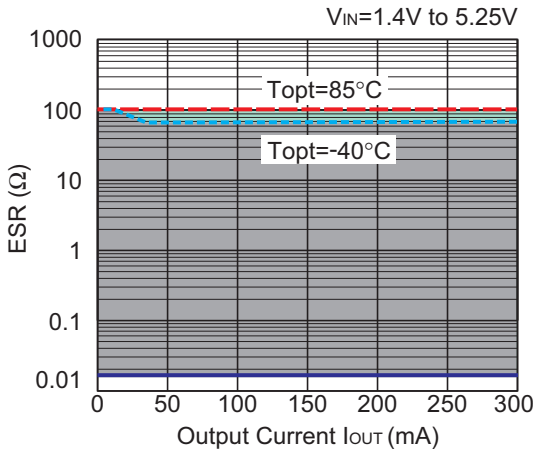

RP200x18xx

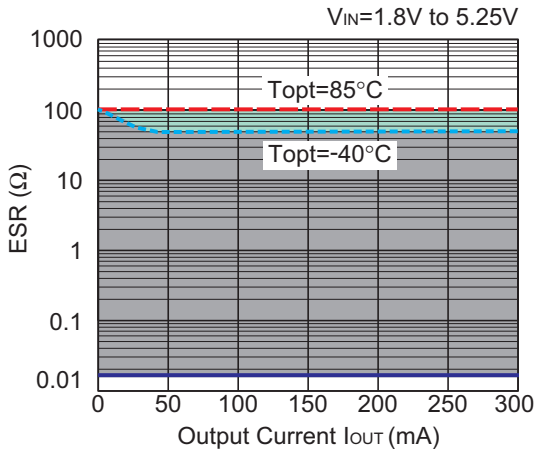

RP200x28xx

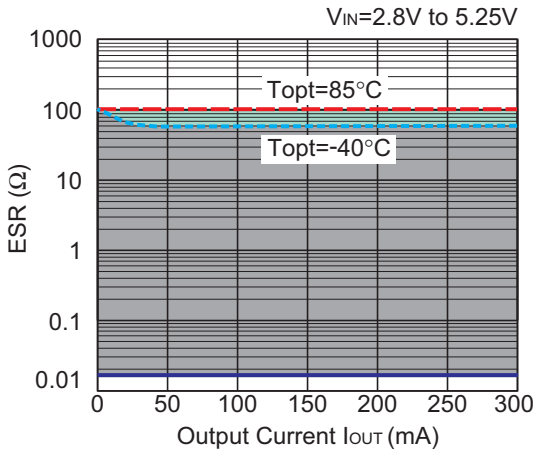

RP200x40xx

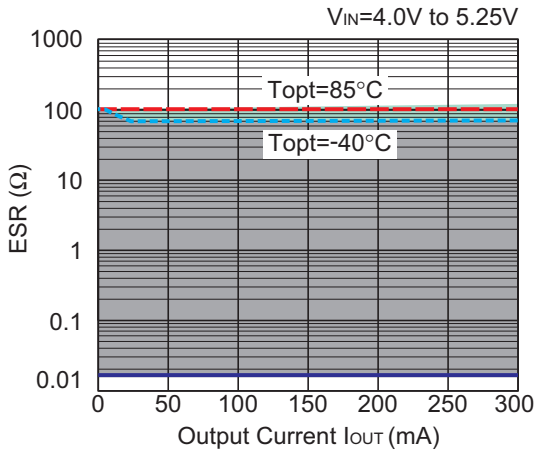

1. The products and the product specifications described in this document are subject to change or discontinuation of production without notice for reasons such as improvement. Therefore, before deciding to use the products, please refer to our sales representatives for the latest information thereon.
2. The materials in this document may not be copied or otherwise reproduced in whole or in part without the prior written consent of us.
3. This product and any technical information relating thereto are subject to complementary export controls (so-called KNOW controls) under the Foreign Exchange and Foreign Trade Law, and related politics ministerial ordinance of the law. (Note that the complementary export controls are inapplicable to any application-specific products, except rockets and pilotless aircraft, that are insusceptible to design or program changes.) Accordingly, when exporting or carrying abroad this product, follow the Foreign Exchange and Foreign Trade Control Law and its related regulations with respect to the complementary export controls.
4. The technical information described in this document shows typical characteristics and example application circuits for the products. The release of such information is not to be construed as a warranty of or a grant of license under our or any third party's intellectual property rights or any other rights.
5. The products listed in this document are intended and designed for use as general electronic components in standard applications (office equipment, telecommunication equipment, measuring instruments, consumer electronic products, amusement equipment etc.). Those customers intending to use a product in an application requiring extreme quality and reliability, for example, in a highly specific application where the failure or misoperation of the product could result in human injury or death should first contact us.
    - Aerospace Equipment
    - Equipment Used in the Deep Sea
    - Power Generator Control Equipment (nuclear, steam, hydraulic, etc.)
    - Life Maintenance Medical Equipment
    - Fire Alarms / Intruder Detectors
    - Vehicle Control Equipment (automotive, airplane, railroad, ship, etc.)
    - Various Safety Devices
    - Traffic control system
    - Combustion equipment

    In case your company desires to use this product for any applications other than general electronic equipment mentioned above, make sure to contact our company in advance. Note that the important requirements mentioned in this section are not applicable to cases where operation requirements such as application conditions are confirmed by our company in writing after consultation with your company.
6. We are making our continuous effort to improve the quality and reliability of our products, but semiconductor products are likely to fail with certain probability. In order to prevent any injury to persons or damages to property resulting from such failure, customers should be careful enough to incorporate safety measures in their design, such as redundancy feature, fire containment feature and fail-safe feature. We do not assume any liability or responsibility for any loss or damage arising from misuse or inappropriate use of the products.
7. The products have been designed and tested to function within controlled environmental conditions. Do not use products under conditions that deviate from methods or applications specified in this datasheet. Failure to employ the products in the proper applications can lead to deterioration, destruction or failure of the products. We shall not be responsible for any bodily injury, fires or accident, property damage or any consequential damages resulting from misuse or misapplication of the products.
8. Quality Warranty
    8-1. Quality Warranty Period
    In the case of a product purchased through an authorized distributor or directly from us, the warranty period for this product shall be one (1) year after delivery to your company. For defective products that occurred during this period, we will take the quality warranty measures described in section 8-2. However, if there is an agreement on the warranty period in the basic transaction agreement, quality assurance agreement, delivery specifications, etc., it shall be followed.
    8-2. Quality Warranty Remedies
    When it has been proved defective due to manufacturing factors as a result of defect analysis by us, we will either deliver a substitute for the defective product or refund the purchase price of the defective product.
    Note that such delivery or refund is sole and exclusive remedies to your company for the defective product.
    8-3. Remedies after Quality Warranty Period
    With respect to any defect of this product found after the quality warranty period, the defect will be analyzed by us. On the basis of the defect analysis results, the scope and amounts of damage shall be determined by mutual agreement of both parties. Then we will deal with upper limit in Section 8-2. This provision is not intended to limit any legal rights of your company.
9. Anti-radiation design is not implemented in the products described in this document.
10. The X-ray exposure can influence functions and characteristics of the products. Confirm the product functions and characteristics in the evaluation stage.
11. WLCSP products should be used in light shielded environments. The light exposure can influence functions and characteristics of the products under operation or storage.
12. Warning for handling Gallium and Arsenic (GaAs) products (Applying to GaAs MMIC, Photo Reflector). These products use Gallium (Ga) and Arsenic (As) which are specified as poisonous chemicals by law. For the prevention of a hazard, do not burn, destroy, or process chemically to make them as gas or power. When the product is disposed of, please follow the related regulation and do not mix this with general industrial waste or household waste.
13. Please contact our sales representatives should you have any questions or comments concerning the products or the technical information.

NISSHINBO

Nisshinbo Micro Devices Inc.

Official website
https://www.nisshinbo-microdevices.co.jp/en/

Purchase information
https://www.nisshinbo-microdevices.co.jp/en/buy/

ENTEGRECİ

Bu belge www.entegreci.com üzerinden sunulmaktadır.

Elektronik komponent tedarikinde Entegreci

Entegreci, Eskişehir merkezli, Türkiye geneline satış yapan bir elektronik komponent mağazasıdır. Entegreler (IC), mikrodenetleyiciler, transistörler, diyotlar, pasif elemanlar, konnektörler, modüller ve geliştirme kartları tek adetten seri üretim adetlerine kadar satılır. Ürün sayfalarında güncel stok durumunu, fiyatı ve datasheet bağlantısını bulabilirsiniz.

Parça koduyla arama

Üretici parça numarasını yazın; stok ve fiyatı hemen görün.

www.entegreci.com

Ürün kategorileri

Entegreden kapasitöre tüm elektronik komponent kategorileri.

Kategorilere göz atın

Üreticiler

Aradığınız üreticinin ürünlerini tek sayfada inceleyin.

Üreticileri görün

Toplu alım ve teklif

Listede olmayan ya da yüksek adetli parçalar için teklif isteyin.

Teklif isteyin

www.entegreci.com | **destek@entegreci.com** | **0850 305 90 34**

Entegreci is an online electronic components store based in Türkiye. Search by manufacturer part number to see stock, prices and datasheets for integrated circuits, microcontrollers, transistors, passive components and connectors, or request a quote for parts that are not listed.

Bu sayfa Entegreci tarafından eklenmiştir. Belgenin önceki sayfaları asıl yayıncısına aittir ve içeriği değiştirilmemiştir; en güncel sürüm için belgenin yayıncısına başvurun.