1.5A Three Terminal Adjustable Voltage Regulator

Description

The SG117 and SG117A are 3-terminal positive adjustable voltage regulators which offer improved performance over the original 117 design. A major feature of the SG117A is a reference voltage tolerance guaranteed within ± 1%, allowing an overall power supply tolerance to be better than 3% using inexpensive 1% resistors. Line and load regulation performance has been improved as well.

Moreover, the SG117A reference voltage is guaranteed not to exceed 2% when operating over the full load, line and power dissipation conditions. The SG117A adjustable regulators offer an improved solution for all positive voltage regulator requirements with load currents up to 1.5A.

In addition to replacing many fixed regulators, the SG117/A can be used in a variety of other applications due to its 'floating' design as long as the input-to-output differential maximum is not exceeded, such as a current source. A higher voltage version is available the SG117AHV and SG117HV which offers input voltage up to 60V.

Features

- Adjustable Output Down to 1.25V
- 1% Output Voltage Tolerance
- 0.01%/V Line Regulation
- 0.3% Load Regulation
- Min. 1.5A Output Current
- Typical 80dB Ripple Rejection
- Available in Hermetic TO-257

High Reliability Features – SG117A/SG117

- Available to MIL-STD-883, ¶1.2.1
- MSC-AMS level "S" Processing Available
- Available to DSCC
  - Standard Microcircuit Drawing (SMD)
- MIL-M-38510/7703405XA SG117AT-JAN
- MIL-M-38510/7703405YA SG117AK-JAN

Schematic Diagram

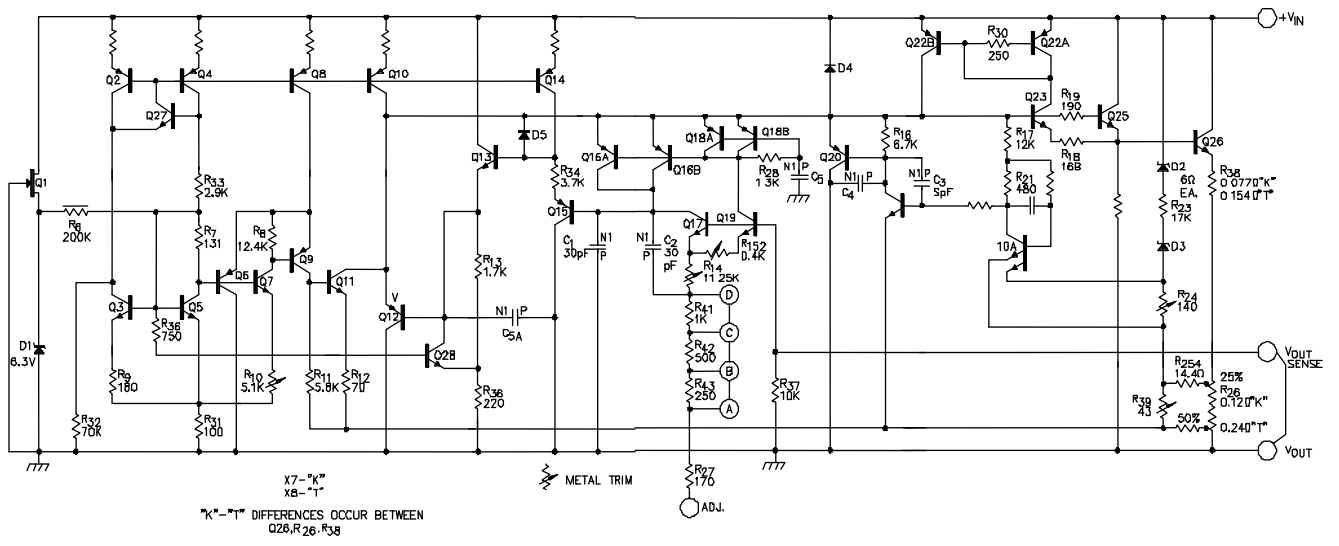

Figure 1 · Block Diagram

© 2015 Microsemi Corporation- Analog Mixed Signal

Connection Diagrams and Ordering Information

Ambient Temperature	Type	Package	Part Number	Packaging Type	Connection Diagram
-55°C to 125°C	K	3-TERMINAL METAL CAN	SG117AK SG117AK-883B SG117AK-DESC SG117K SG117K-883B SG117K-DESC SG117K-JAN	TO-3	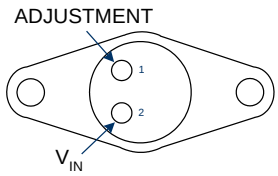
-55°C to 125°C	T	3-TERMINAL METAL CAN	SG117AT SG117AT-883B SG117AT-DESC SG117T SG117T-883B SG117T-DESC SG117T-JAN	TO-39	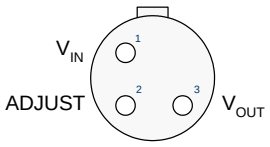
-55°C to 125°C	IG	3-Pin HERMETIC Package (Isolated)	SG117AIG SG117AIG-883B SG117AIG-DESC SG117IG SG117IG-883B SG117IG-DESC	TO-257	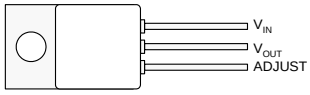 Case is Isolated
-55°C to 125°C	G	3-Pin HERMETIC Package	SG117AG SG117AG-883B SG117AG-DESC SG117G SG117G-883B SG117G-DESC	TO-257	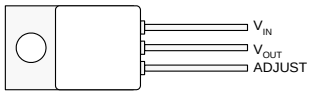 Case is V_{OUT}

Connection Diagrams and Ordering Information

Ambient Temperature	Type	Package	Part Number	Packaging Type	Connection Diagram
-55°C to 125°C	L	20-Pin Ceramic	SG117AL SG117AL-883B SG117AL-DESC SG117L SG117L-883B SG117L-DESC	CLCC	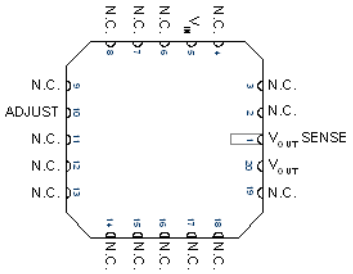

Notes:

1. *Contact factory for JAN and DESC part availability.*
2. *All parts are viewed from the top.*
3. *For devices with multiple inputs and outputs both must be externally connected together at the device terminals.*
4. *For normal operation, the SENSE pin must be externally connected to the load.*
5. *These Hermetic Packages use Sn63/Pb37 hot solder dip lead finish, contact factory for availability of RoHS versions.*

Absolute Maximum Ratings

Parameter	Value	Units
Power Dissipation	Internally Limited	
Input to Output Voltage Differential	40	V
Storage Temperature Range	-65 to 150	°C
Maximum Operating Junction Temperature	150	°C
Lead Temperature (Soldering, 10 seconds)	300	°C

Notes:
Exceeding these ratings could cause damage to the device. All voltages are with respect to Ground. Currents are positive into, negative out of specified terminal.

Thermal Data

Parameter	Value	Units
K Package: 3 Terminal TO-3 Metal Can		
Thermal Resistance-Junction to Case, θ_{JC}	3	°C/W
Thermal Resistance-Junction to Ambient, θ_{JA}	35	°C/W
T Package: 3-Pin TO-39 Metal Can		
Thermal Resistance-Junction to Case, θ_{JC}	15	°C/W
Thermal Resistance-Junction to Ambient, θ_{JA}	120	°C/W
IG Package: 3-Pin TO-257 Hermetic (Isolated)		
Thermal Resistance-Junction to Case, θ_{JC}	3.5	°C/W
Thermal Resistance-Junction to Ambient, θ_{JA}	42	°C/W
G Package: 3-Pin TO-257 Hermetic		
Thermal Resistance-Junction to Case, θ_{JC}	3.5	°C/W
Thermal Resistance-Junction to Ambient, θ_{JA}	42	°C/W
L Package: 20-Pin Ceramic (LCC) Leadless		
Thermal Resistance-Junction to Case, θ_{JC}	35	°C/W
Thermal Resistance-Junction to Ambient, θ_{JA}	120	°C/W

Notes:
1. *Junction Temperature Calculation: $T_J = T_A + (P_D \times \theta_{JA})$.*
2. *The above numbers for θ_{JC} are maximums for the limiting thermal resistance of the package in a standard mounting configuration. The θ_{JA} numbers are meant to be guidelines for the thermal performance of the device/pcboard system. All of the above assume no ambient airflow.*

Recommended Operating Conditions

Parameter	Value	Units
Input Voltage Range	V_{OUT} +3.5V to 37	V
Operating Ambient Temperature Range		
SG117A / SG117	-55 to 125	°C

Note: *Range over which the device is functional.*

Electrical Characteristics

Unless otherwise specified, these characteristics apply over the full operating ambient temperature for the SG117A / SG117 with -55°C ≤ T_A ≤ 125°C, $V_{IN} – V_{OUT}$ = 5.0V and for I_{OUT} = 500mA (K, G, and IG) and I_{OUT} = 100mA (T, and L packages). Although power dissipation is internally limited, these specifications are applicable for power dissipations of 2W for the T, and L packages, and 20W for the K, G, and IG packages. I_{MAX} is 1.5A for the K, G, and IG packages and 500mA for the T, and L packages. Low duty cycle pulse testing techniques are used which maintains junction and case temperatures equal to the ambient temperature.

Parameter	Test Condition	SG117A			SG117			Units
		Min	Typ	Max	Min	Typ	Max	
Reference Section								
Reference Voltage	I_{OUT} = 10mA, T_A = 25°C	1.238	1.250	1.262				V
	3V ≤ ($V_{IN} – V_{OUT}$) ≤ 40V, P ≤ P_{MAX}	1.225	1.250	1.270	1.20	1.25	1.30	
	10mA ≤ I_{OUT} ≤ I_{MAX}							
Output Section								
Line Regulation[1]	3V ≤ ($V_{IN} – V_{OUT}$) ≤ 40V, I_L = 10mA							
	T_A = 25°C		0.005	0.01		0.01	0.02	%/V
	T_A = T_{MIN} to T_{MAX}		0.01	0.02		0.02	0.05	
Load Regulation[1]	10mA ≤ I_{OUT} ≤ I_{MAX}							
	V_{OUT} ≤ 5V, T_A = 25°C		5	15		5	15	mV
	V_{OUT} > 5V, T_A = 25°C		0.1	0.3		0.1	0.3	%
	V_{OUT} ≤ 5V		20	50		20	50	mV
	V_{OUT} > 5V		0.3	1		0.3	1	%
Thermal Regulation[2]	T_A = 25°C, 20ms pulse		0.002	0.02		0.03	0.07	%/W
Ripple Rejection	V_{OUT} = 10V, f = 120Hz							
	C_{ADJ} = 1µF, T_A = 25°C		65			65		dB
	C_{ADJ} = 10µF	66	80		66	80		
Minimum Load Current	($V_{IN} – V_{OUT}$) = 40V		3.5	5		3.5	5	mA
Current Limit	($V_{IN} – V_{OUT}$) ≤ 15V							
	K, P, G, IG Packages	1.5	2.2		1.5	2.2		A
	T, L Packages	0.5	0.8		0.5	0.8		
	($V_{IN} – V_{OUT}$) = 40V, T_J = 25°C							
	K, P, G, IG Packages	0.3	0.4		0.3	0.4		A
	T, L Packages	0.15	0.2		0.15	0.2		
Temperature Stability[2]			1	2		1		%
Long Term Stability[2]	T_A = 125°C, 1000 Hours		0.3	1		0.3	1	
RMS Output Noise (% of V_{OUT})[2]	T_A = 25°C, 10Hz ≤ f ≤ 10kHz		0.001			0.001		
Adjust Section								
Adjust Pin Current			50	100		50	100	µA
Adjust Pin Current Change	10mA < I_{OUT} < I_{MAX}, 2.5V < ($V_{IN} – V_{OUT}$) < 40V		0.2	5		0.2	5	

[1]*Regulation is measured at constant junction temperature, using pulse testing with low duty cycle. Changes in output voltage due to heating effects are covered under the specification for thermal regulation.*

[2]*These parameters, although guaranteed, are not tested in production.*

Characteristic Curves

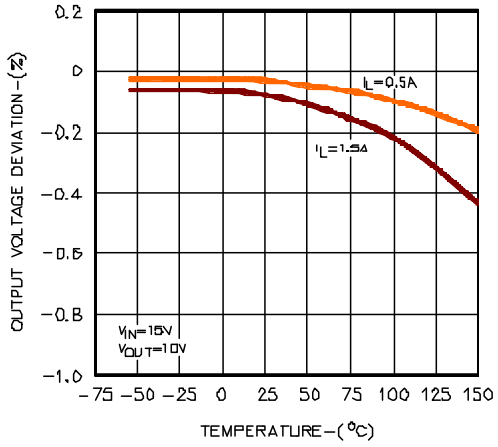

Figure 2 · Output Voltage Deviation vs. Temperature

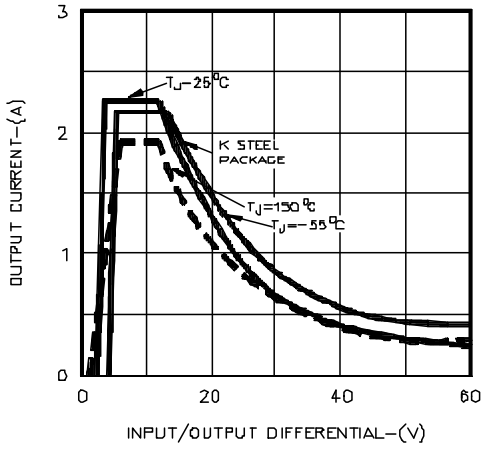

Figure 3 · Output Current vs. Input / Output Differential

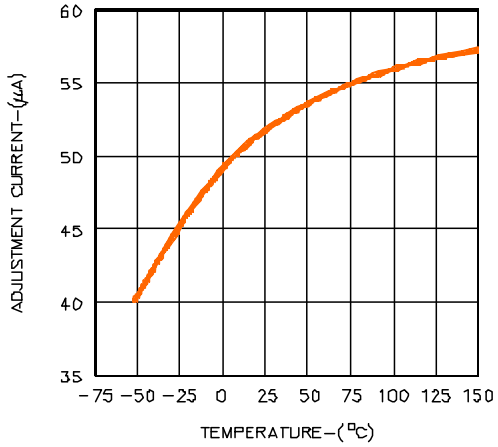

Figure 4 · Adjust Current vs. Temperature

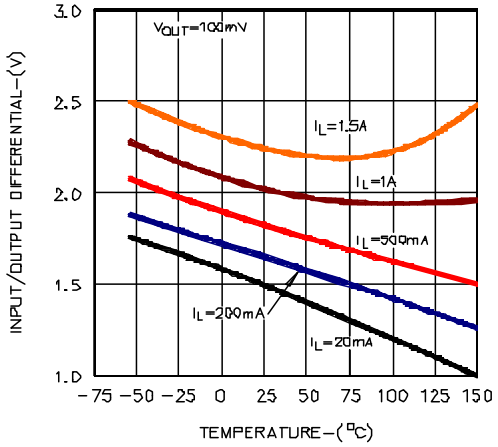

Figure 5 · Input / Output Differential vs. Temperature

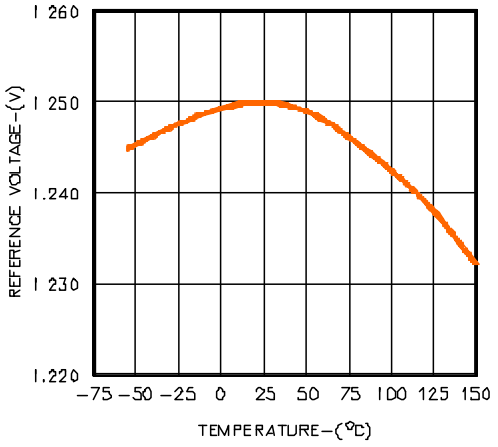

Figure 6 · Reference Voltage vs. Temperature

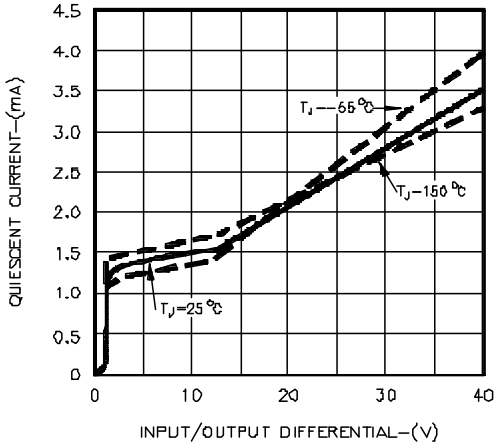

Figure 7 · Quiescent Current vs. Input /Output Differential

Characteristic Curves

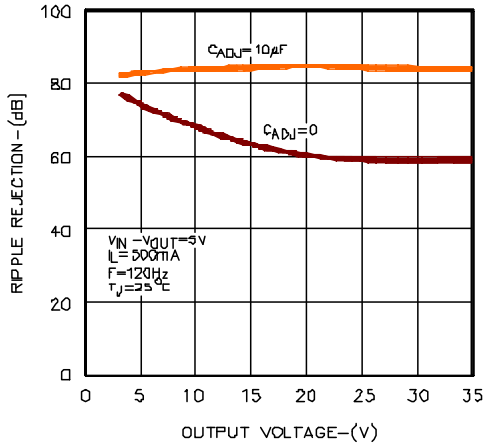

Figure 8 · Ripple Rejection vs. Output Voltage

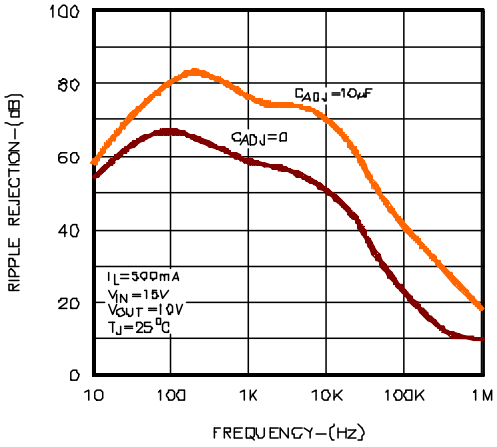

Figure 9 · Ripple Rejection vs. Frequency

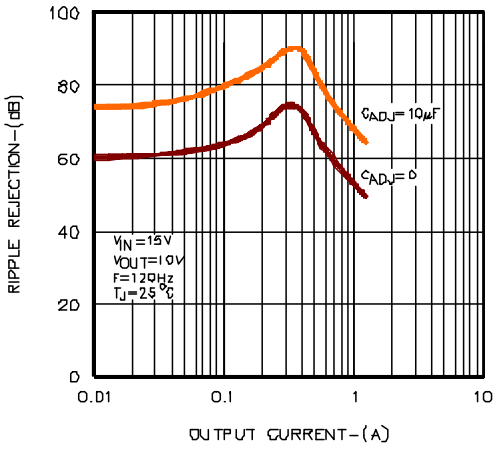

Figure 10 · Ripple Rejection vs. Output Current

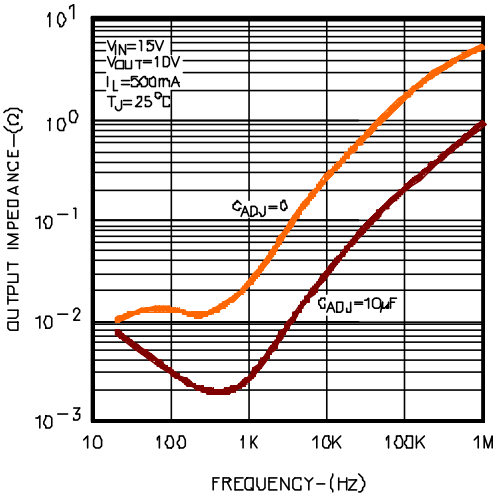

Figure 11 · Output Impedance vs. Frequency

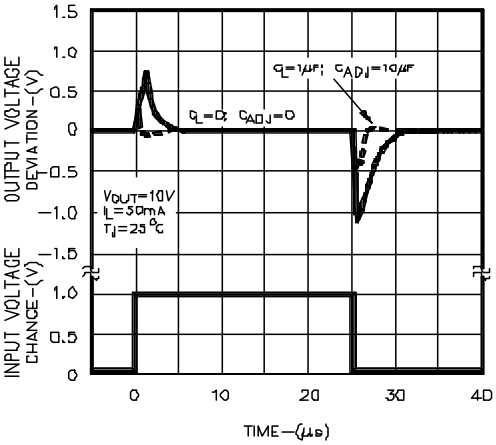

Figure 12 · Line Transient Response

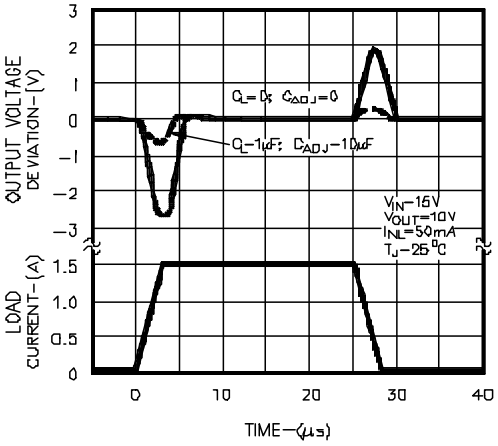

Figure 13 · Load Transient Response

Characteristic Curves

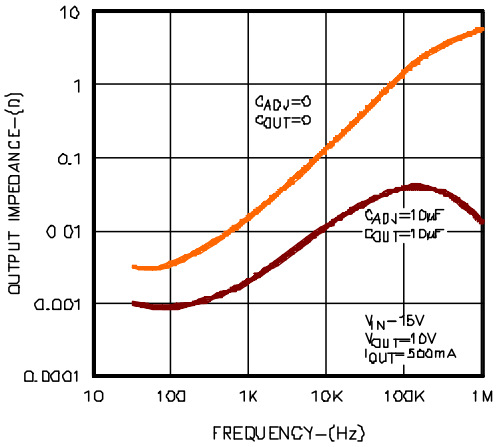

Figure 14 · Output Impedance vs. Frequency

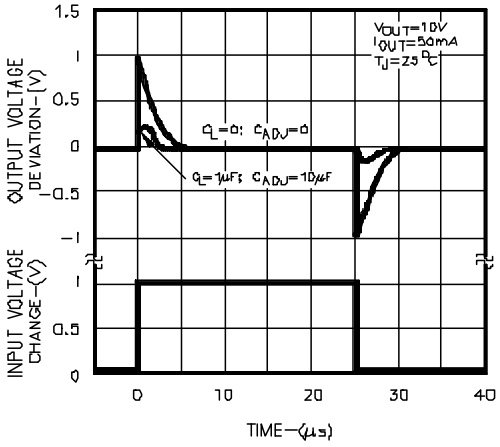

Figure 15 · Line Transient Response

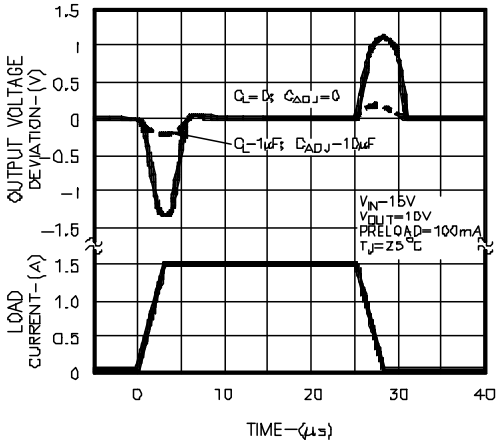

Figure 16 · Load Transient Response

Application Information

General

The SG117A develops a 1.25V reference voltage between the output (OUT) and the adjust (ADJ) terminals (see Basic Regulator Circuit). By placing a resistor, R_1 between these two terminals, a constant current is caused to flow through R_1 and down through R_2 to set the overall output voltage. Normally this current is the specified minimum load current of 5mA or 10mA. It is important to maintain this minimum output load current requirement otherwise the device may fail to regulate, and the output voltage may rise.

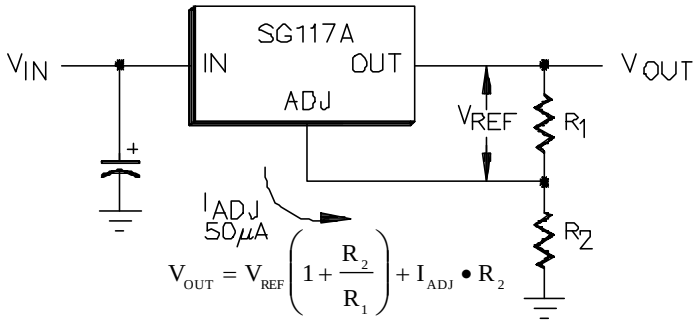

Figure 17 · Basic Regulator Circuit

The I_{ADJ} current does add an error to the output divider ratio, however because I_{ADJ} is very small and constant when compared with the current through R1, it represents a small error and can often be ignored.

It is easily seen from the above equation, that even if the resistors were of exact value, the accuracy of the output is limited by the accuracy of V_{REF}. With a guaranteed 1% reference, a 5V power supply design, using ±2% resistors, would have a worse case manufacturing tolerance of ± 4%. If 1% resistors were used, the tolerance would drop to ± 2.5%. A plot of the worst case output voltage tolerance as a function of resistor tolerance is shown below.

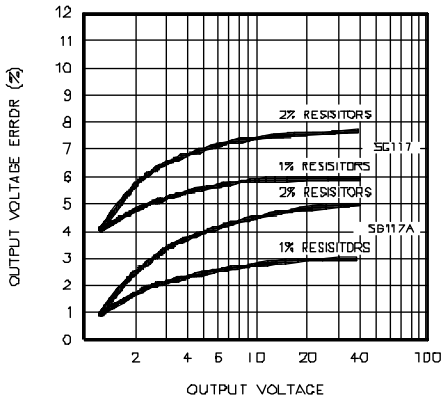

Figure 18 · Voltage Tolerance vs. Resistor Tolerance

Bypass Capacitors

Input bypassing using a 0.1 µF ceramic or 1µF solid tantalum is recommended, and especially when any input filter capacitors are more than 5 inches from the device. A 0.1µF bypass capacitor on the ADJ pin is required if the load current varies by more than 1A/µsec. Improved ripple rejection (80dB) can be accomplished by adding a 10µF capacitor from the ADJ pin to ground.

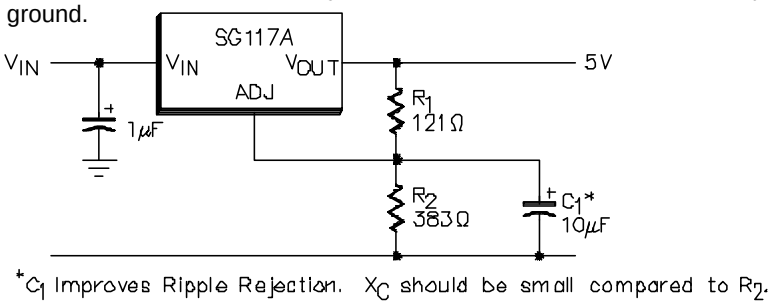

Figure 19 · Improving Ripple Rejection

While the SG117 is stable with no output capacitor, for improved AC transient response and to prevent the possibility of oscillation due to an unknown reactive load, a 1µF capacitor is also recommended at the output. Because of their low impedance at high frequencies, the best type of capacitor to use is solid tantalum; ceramic capacitors may also be used. When bypass capacitors are used, it may be necessary to provide external protection diodes to prevent this external large capacitance from discharging through internal low current paths, which may damage the device. Although the duration of any surge current is short, there may be sufficient energy to damage the regulator. This is particularly true of the large capacitance on the ADJ pin when output voltages are higher than 25V. Such a capacitor could discharge into the ADJ pin when either the input or output is shorted. See figure below.

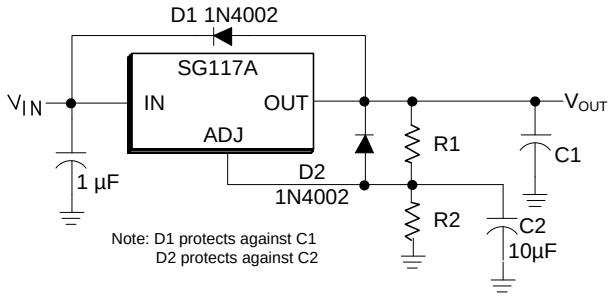

Figure 20 · Use of Protection Diodes

Load Regulation

Because the SG117A is a three-terminal device, it is not possible to provide true remote load sensing. Load regulation will be limited by the resistance of the wire connecting the regulator to the load. From the data sheet specification, regulation is measured at the bottom of the package. Negative side sensing is a true Kelvin connection, with the bottom of the output divider returned to the negative side of the load. Although it may not be immediately obvious, best load regulation is obtained when the top of the divider is connected directly to the case, not to the load. This is illustrated in (Connections for Best Load Regulation). If R1 were connected to the load, the effective resistance between the regulator and the load would be:

$$R_p \bullet \left(\frac{R_2 + R_1}{R_1} \right), R_p = \text{ParasiticLineResistance}$$

Connected as shown, R_P is not multiplied by the divider ratio. R_P is about 0.004Ω per foot using 16 gauge wire. This translates to 4mV/ft. at 1A load current, so it is important to keep the positive lead between regulator and load as short as possible.

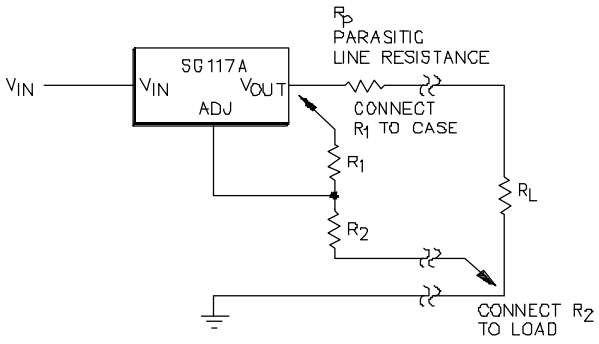

Figure 21 · Connections for Best Load Regulation

Current Limit

As outlined in the Electrical Characteristics the current limit will activate whenever the output current exceeds the specified levels. It is also important to bear in mind that the regulator includes a foldback-current characteristic that limits the current at higher V_{IN} to V_{OUT} differential voltages. This power limiting characteristic will prevent the regulator from providing full output current depending on the V_{IN} to V= differential. Also if during a short circuit situation the regulator was presented with a voltage that exceeds the Absolute Maximum Rating of 40V (e.g. V_{IN} > 40V, V_{OUT} = 0V) the device may fail, or be permanently damaged.

Typical Applications

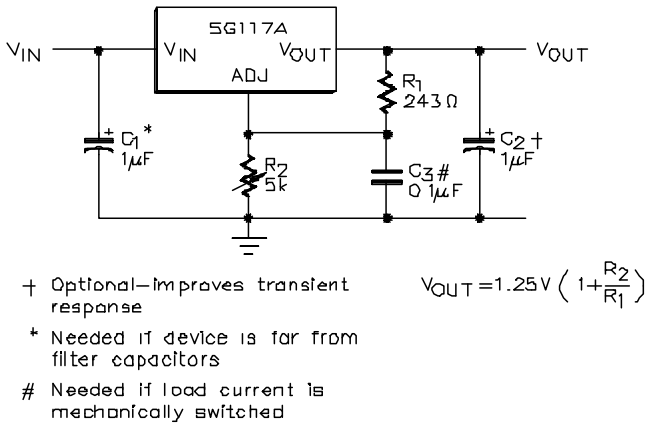

Figure 22 · 1.2V – 25V Adjustable Regulator

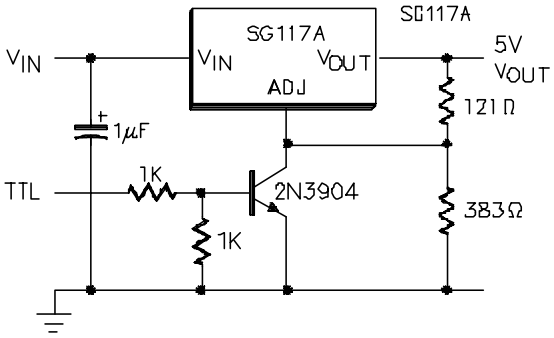

Figure 23 · 5V Regulator with Shut Down

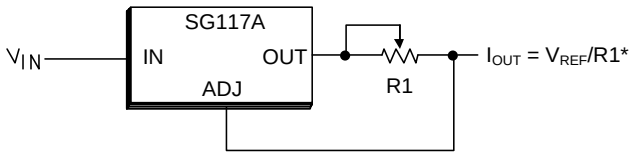

* $0.8\Omega \leq R1 \leq 120\Omega$

Figure 24 ·

Figure 25 · Programmable Current Limiter

PACKAGE OUTLINE DIMENSIONS

Controlling dimensions are in inches, metric equivalents are shown for general information.

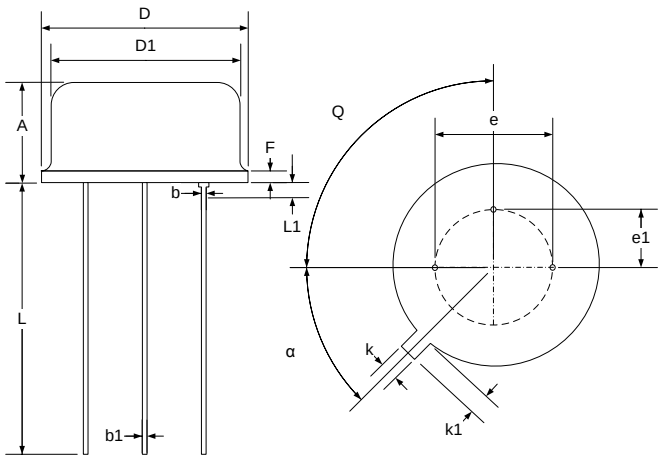

Dim	MILLIMETERS		INCHES	
	MIN	MAX	MIN	MAX
D	8.89	9.40	0.350	0.370
D1	8.13	8.51	0.320	0.335
A	4.19	4.70	0.165	0.185
b	0.41	0.48	0.016	0.019
F	-	1.02	-	0.040
e	5.08 BSC		0.200 BSC	
k	0.71	0.86	0.028	0.034
k1	0.74	1.14	0.029	0.045
L	12.70	14.48	0.500	0.570
α	45° TYP		45° TYP	
e1	2.54 TYP		0.100 TYP	
b1	0.41	0.53	0.016	0.021
Q	90° TYP		90° TYP	
L1	-	1.27	-	0.50

Figure 26 · T 3-Pin Metal Can TO-39 Package Dimensions

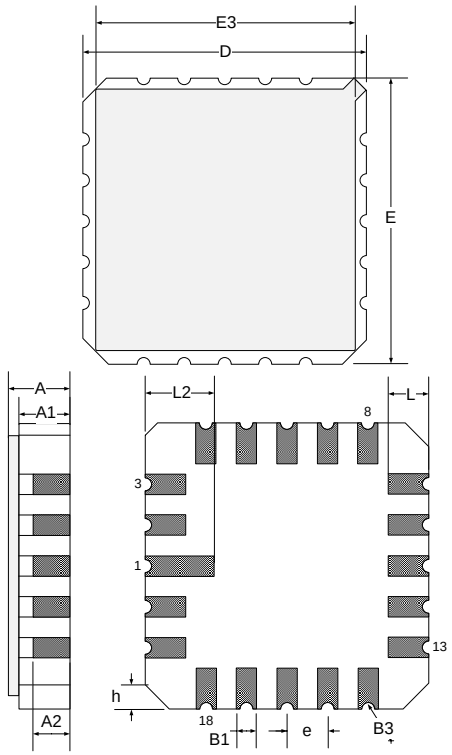

Dim	MILLIMETERS		INCHES	
	MIN	MAX	MIN	MAX
D/E	8.64	9.14	0.340	0.360
E3	-	8.128	-	0.320
e	1.270 BSC		0.050 BSC	
B1	0.635 TYP		0.025 TYP	
L	1.02	1.52	0.040	0.060
A	1.626	2.286	0.064	0.090
h	1.016 TYP		0.040 TYP	
A1	1.372	1.68	0.054	0.066
A2	-	1.168	-	0.046
L2	1.91	2.41	0.075	0.95
B3	0.203R		0.008R	

Note:

1. All exposed metalized area shall be gold plated 60 micro-inch minimum thickness over nickel plated unless otherwise specified in purchase order.

Figure 27 · L 20-Pin Ceramic Leadless Chip Carrier (LCC) Package Dimensions

PACKAGE OUTLINE DIMENSIONS

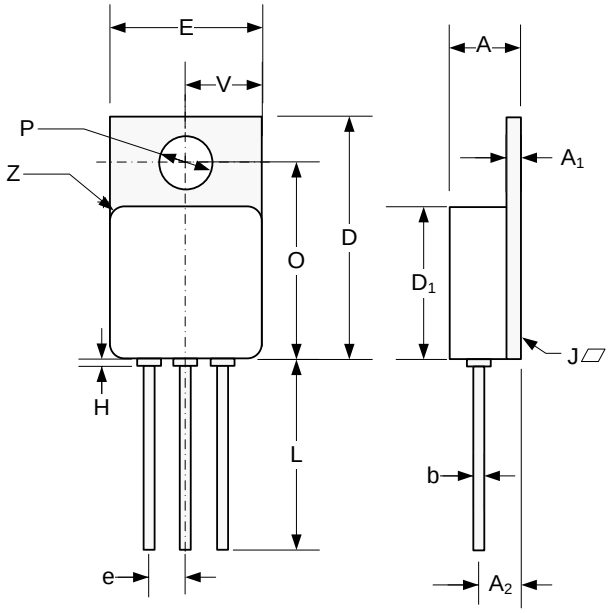

Dim	MILLIMETERS		INCHES	
	MIN	MAX	MIN	MAX
A	4.70	5.21	0.185	0.205
A_1	0.89	1.14	0.035	0.045
A_2	2.92	3.18	0.115	0.125
b	0.71	.081	0.027	0.032
D	16.38	16.76	0.645	0.660
D_1*	10.41	10.92	0.410	0.430
e	2.54 BSC		0.100 BSC	
E*	10.41	10.67	0.410	0.420
H		0.50		0.020
L	12.70		0.500	
O	13.39	13.64	0.527	0.537
P	3.56	3.81	0.140	0.150
J		0.10		0.004
V	5.13	5.38	0.202	0.212
Z	1.40 TYP		0.055 TYP	

*Excludes Weld Fillet Around Lid.

Figure 28 · G/IG 3-Pin Hermetic TO-257 Package Dimensions

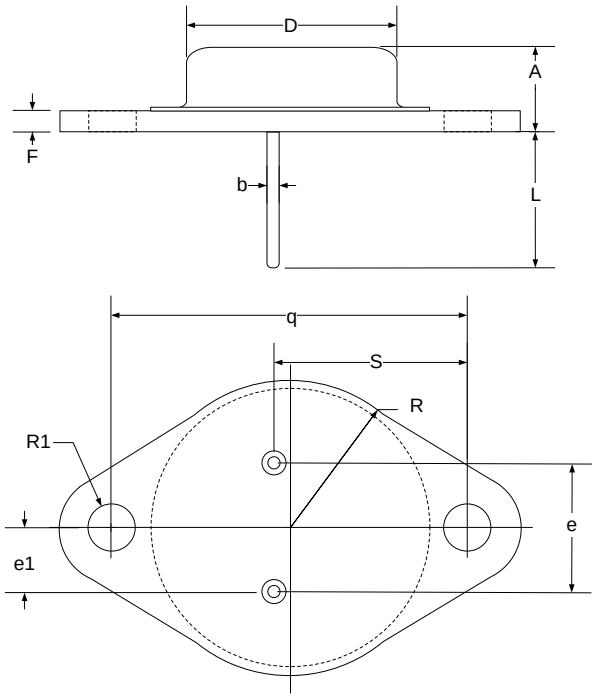

Dim	MILLIMETERS		INCHES	
	MIN	MAX	MIN	MAX
A	6.86	7.62	0.270	0.300
q	29.90	30.40	1.177	1.197
b	0.97	1.09	0.038	0.043
D	19.43	19.68	0.765	0.775
S	16.64	17.14	0.655	0.675
e	10.67	11.18	0.420	0.440
E1	5.21	5.72	0.205	0.225
F	1.52	2.03	0.060	0.080
R1	3.84	4.09	0.151	0.161
L	10.79	12.19	0.425	0.480
R	12.57	13.34	0.495	0.525

Figure 29 · K 3-Pin TO-3 Package Dimensions



Microsemi Corporate Headquarters
One Enterprise, Aliso Viejo,
CA 92656 USA

Within the USA: +1 (800) 713-4113
Outside the USA: +1 (949) 380-6100
Sales: +1 (949) 380-6136
Fax: +1 (949) 215-4996

E-mail: sales.support@microsemi.com

© 2015 Microsemi Corporation. All rights reserved. Microsemi and the Microsemi logo are trademarks of Microsemi Corporation. All other trademarks and service marks are the property of their respective owners.

Microsemi Corporation (Nasdaq: MSCC) offers a comprehensive portfolio of semiconductor and system solutions for communications, defense & security, aerospace and industrial markets. Products include high-performance and radiation-hardened analog mixed-signal integrated circuits, FPGAs, SoCs and ASICs; power management products; timing and synchronization devices and precise time solutions, setting the world's standard for time; voice processing devices; RF solutions; discrete components; security technologies and scalable anti-tamper products; Power-over-Ethernet ICs and midspans; as well as custom design capabilities and services. Microsemi is headquartered in Aliso Viejo, Calif., and has approximately 3,400 employees globally. Learn more at **www.microsemi.com**.

Microsemi makes no warranty, representation, or guarantee regarding the information contained herein or the suitability of its products and services for any particular purpose, nor does Microsemi assume any liability whatsoever arising out of the application or use of any product or circuit. The products sold hereunder and any other products sold by Microsemi have been subject to limited testing and should not be used in conjunction with mission-critical equipment or applications. Any performance specifications are believed to be reliable but are not verified, and Buyer must conduct and complete all performance and other testing of the products, alone and together with, or installed in, any end-products. Buyer shall not rely on any data and performance specifications or parameters provided by Microsemi. It is the Buyer's responsibility to independently determine suitability of any products and to test and verify the same. The information provided by Microsemi hereunder is provided "as is, where is" and with all faults, and the entire risk associated with such information is entirely with the Buyer. Microsemi does not grant, explicitly or implicitly, to any party any patent rights, licenses, or any other IP rights, whether with regard to such information itself or anything described by such information. Information provided in this document is proprietary to Microsemi, and Microsemi reserves the right to make any changes to the information in this document or to any products and services at any time without notice.

ENTEGRECİ

Bu belge www.entegreci.com üzerinden sunulmaktadır.

Elektronik komponent tedarikinde Entegreci

Entegreci, Eskişehir merkezli, Türkiye geneline satış yapan bir elektronik komponent mağazasıdır. Entegreler (IC), mikrodenetleyiciler, transistörler, diyotlar, pasif elemanlar, konnektörler, modüller ve geliştirme kartları tek adetten seri üretim adetlerine kadar satılır. Ürün sayfalarında güncel stok durumunu, fiyatı ve datasheet bağlantısını bulabilirsiniz.

Parça koduyla arama

Üretici parça numarasını yazın; stok ve fiyatı hemen görün.

www.entegreci.com

Ürün kategorileri

Entegreden kapasitöre tüm elektronik komponent kategorileri.

Kategorilere göz atın

Üreticiler

Aradığınız üreticinin ürünlerini tek sayfada inceleyin.

Üreticileri görün

Toplu alım ve teklif

Listede olmayan ya da yüksek adetli parçalar için teklif isteyin.

Teklif isteyin

www.entegreci.com | **destek@entegreci.com** | **0850 305 90 34**

Entegreci is an online electronic components store based in Türkiye. Search by manufacturer part number to see stock, prices and datasheets for integrated circuits, microcontrollers, transistors, passive components and connectors, or request a quote for parts that are not listed.

Bu sayfa Entegreci tarafından eklenmiştir. Belgenin önceki sayfaları asıl yayıncısına aittir ve içeriği değiştirilmemiştir; en güncel sürüm için belgenin yayıncısına başvurun.