- **Qualified for Automotive Applications**
- **ESD Protection Exceeds 2000 V Per MIL-STD-883, Method 3015; Exceeds 200 V Using Machine Model (C = 200 pF, R = 0)**
- **1−A Low-Dropout (LDO) Voltage Regulator**
- **Available in 1.5-V, 1.8-V, 2.5-V, 2.7-V, 2.8-V, 3-V, 3.3-V, 5-V Fixed-Output and Adjustable Versions**
- **Dropout Voltage Down to 230 mV at 1 A (TPS76750)**
- **Ultralow 85-μA Typical Quiescent Current**
- **Fast Transient Response**
- **2% Tolerance Over Specified Conditions for Fixed-Output Versions**
- **Open Drain Power-On Reset With 200-ms Delay (See TPS768xx for PG Option)**
- **20-Pin TSSOP PowerPAD™ (PWP) Package**
- **Thermal Shutdown Protection**

PWP PACKAGE
(TOP VIEW)

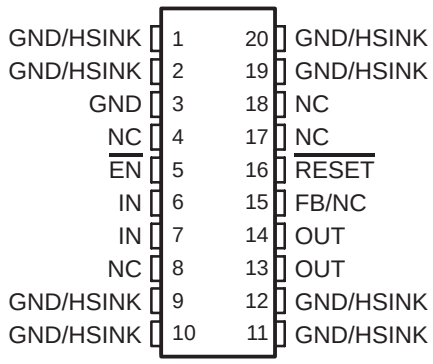

NC − No internal connection

description

These devices are designed to have a fast transient response and be stable with 10-μF low ESR capacitors. This combination provides high performance at a reasonable cost.

Because the PMOS device behaves as a low-value resistor, the dropout voltage is very low (typically 230 mV at an output current of 1 A for the TPS76750) and is directly proportional to the output current. Additionally, since the PMOS pass element is a voltage-driven device, the quiescent current is very low and independent of output loading (typically 85 μA over the full range of output current, 0 mA to 1 A). These two key specifications yield a significant improvement in operating life for battery-powered systems. This low-dropout (LDO) family also features a sleep mode; applying a TTL high signal to the enable ($\overline{EN}$) input shuts down the regulator, reducing the quiescent current to 1 μA at T_J = 25°C.

The $\overline{RESET}$ output of the TPS767xx initiates a reset in microcomputer and microprocessor systems in the event of an undervoltage condition. An internal comparator in the TPS767xx monitors the output voltage of the regulator to detect an undervoltage condition on the regulated output voltage.

The TPS767xx is offered in 1.5-V, 1.8-V, 2.5-V, 2.7-V, 2.8-V, 3-V, 3.3-V, and 5-V fixed-voltage versions and in an adjustable version (programmable over the range of 1.5 V to 5.5 V). Output voltage tolerance is specified as a maximum of 2% over line, load, and temperature ranges. The TPS767xx family is available in a 20-pin PWP package.

Please be aware that an important notice concerning availability, standard warranty, and use in critical applications of Texas Instruments semiconductor products and disclaimers thereto appears at the end of this data sheet.

PowerPAD is a trademark of Texas Instruments.

PRODUCTION DATA information is current as of publication date. Products conform to specifications per the terms of Texas Instruments standard warranty. Production processing does not necessarily include testing of all parameters.

Copyright © 2008, Texas Instruments Incorporated

TPS76733
DROPOUT VOLTAGE
vs
FREE-AIR TEMPERATURE

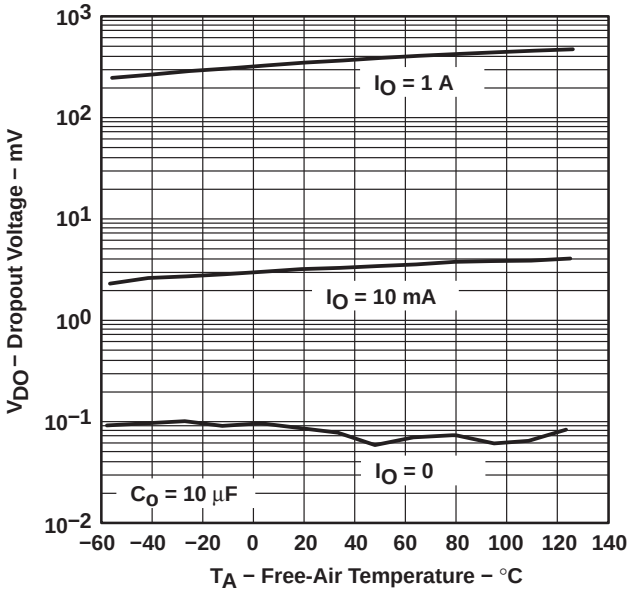

TPS76733
LOAD TRANSIENT RESPONSE

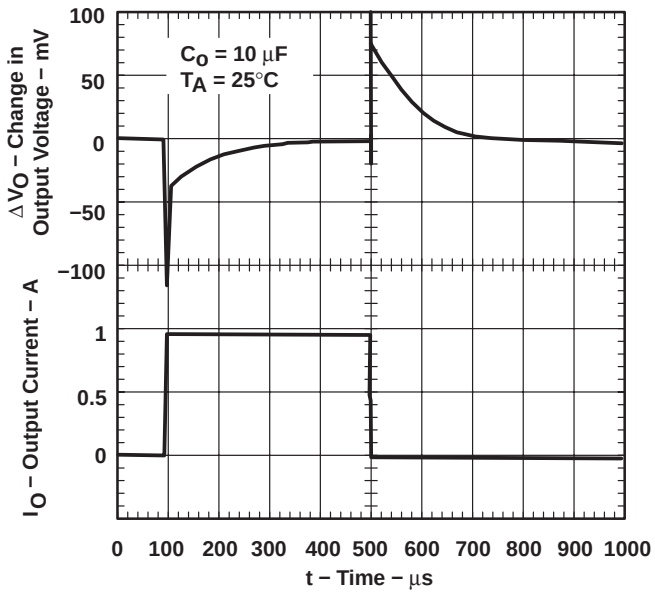

AVAILABLE OPTIONS†

T_J	OUTPUT VOLTAGE (V)	TSSOP (PWP)‡
	TYP	
−40°C to 125°C	5	TPS76750QPWPRQ1
	3.3	TPS76733QPWPRQ1
	3	TPS76730QPWPRQ1§
	2.8	TPS76728QPWPRQ1§
	2.7	TPS76727QPWPRQ1§
	2.5	TPS76725QPWPRQ1
	1.8	TPS76718QPWPRQ1
	1.5	TPS76715QPWPRQ1
	Adjustable 1.5 V to 5.5 V	TPS76701QPWPRQ1

† For the most current package and ordering information, see the Package Option Addendum at the end of this document, or see the TI web site at www.ti.com.
‡ Available taped and reeled in quantities of 2000 per reel
§ This devices is product preview.

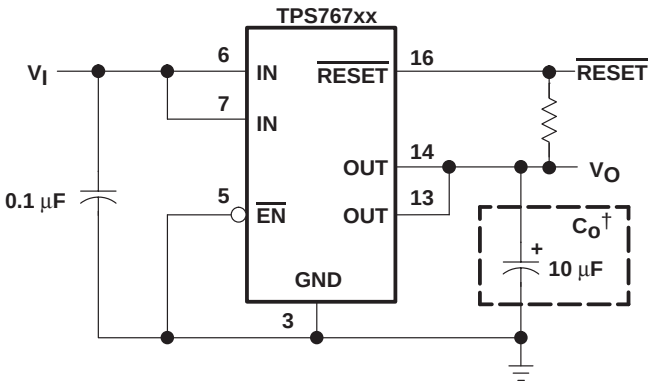

† See application information section for capacitor selection details.

Figure 1. Typical Application Configuration (for Fixed Output Options)

functional block diagram—adjustable version

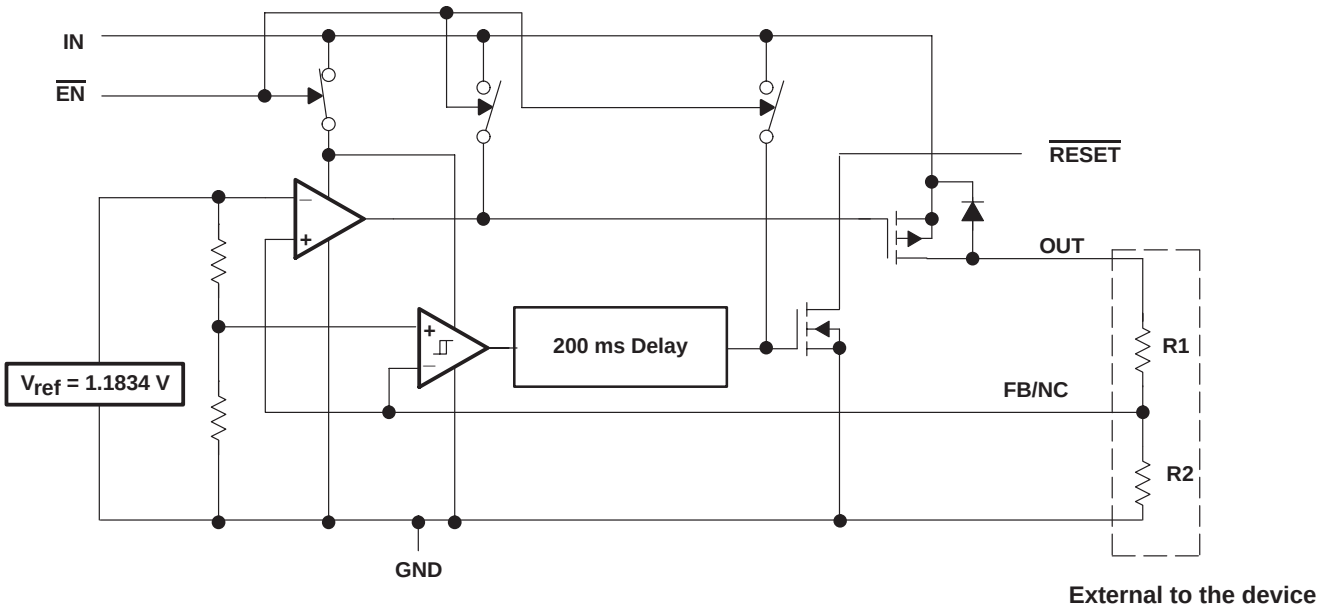

functional block diagram—fixed-voltage version

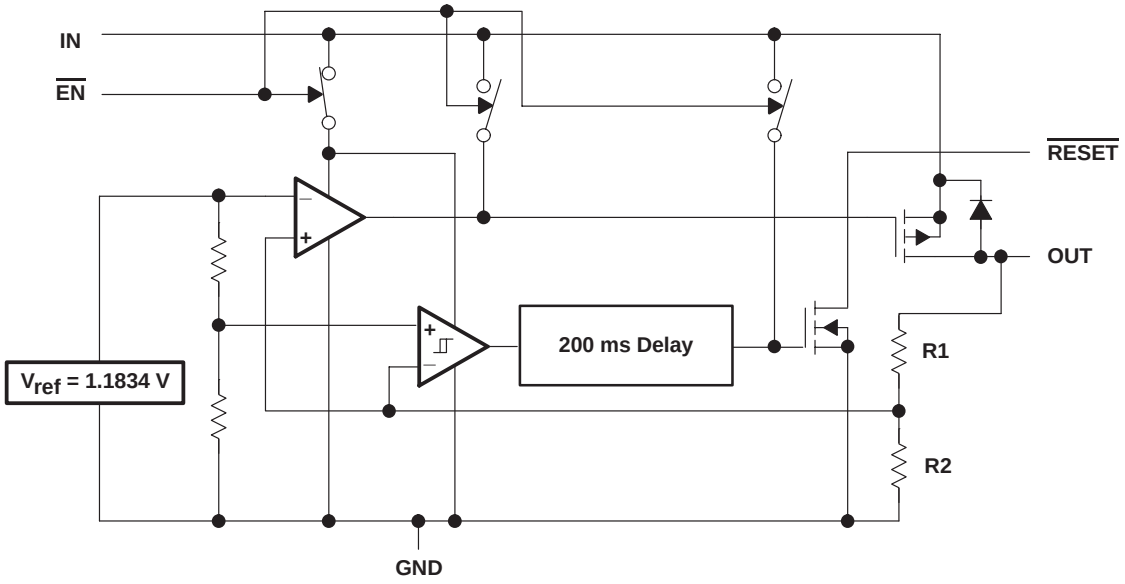

Terminal Functions

TERMINAL NAME	TERMINAL NO.	I/O	DESCRIPTION
$\overline{EN}$	5	I	Enable
FB/NC	15	I	Feedback voltage for adjustable device (no connect for fixed options)
GND	3		Regulator ground
GND/HSINK	1, 2, 9, 10, 11, 12, 19, 20		Ground/heatsink
IN	6, 7	I	Input voltage
NC	4, 8, 17, 18		No connect
OUT	13, 14	O	Regulated output voltage
$\overline{RESET}$	16	O	Reset

timing diagram

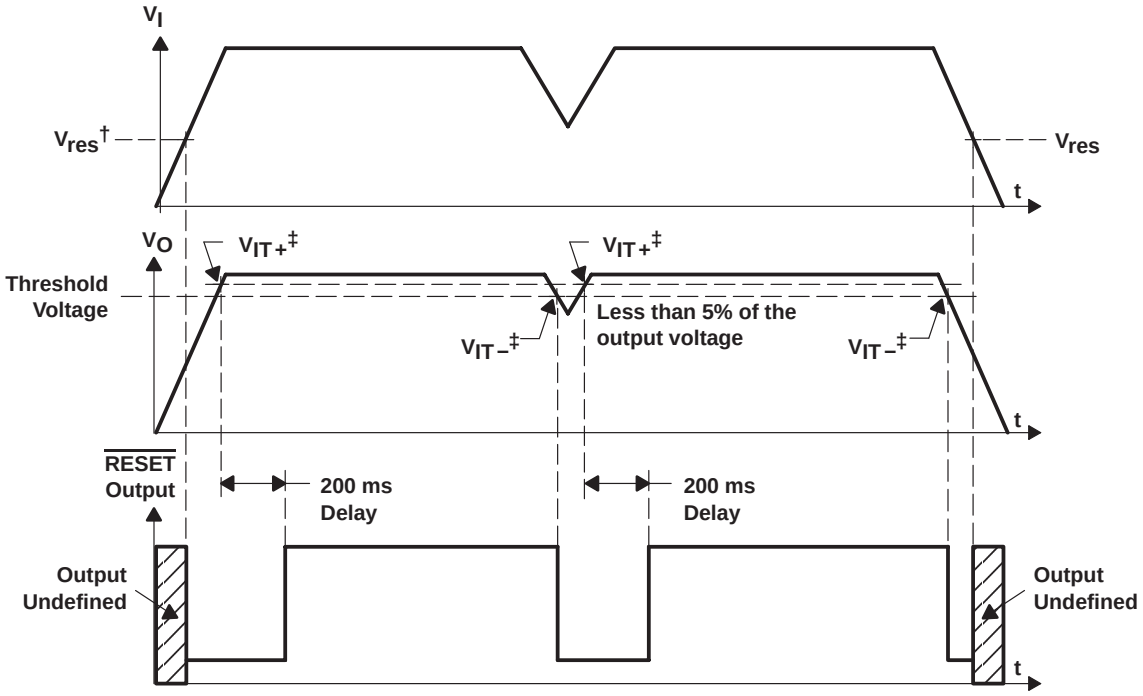

† V_{res} is the minimum input voltage for a valid $\overline{\text{RESET}}$. The symbol V_{res} is not currently listed within EIA or JEDEC standards for semiconductor symbology.

‡ V_{IT} −Trip voltage is typically 5% lower than the output voltage (95%V_O) V_{IT-} to V_{IT+} is the hysteresis voltage.

absolute maximum ratings over operating free-air temperature range (unless otherwise noted)†

Input voltage range‡, V_I . . . . . −0.3 V to 13.5 V
Voltage range at $\overline{EN}$ . . . . . −0.3 V to V_I + 0.3 V
Maximum $\overline{RESET}$ voltage . . . . . 16.5 V
Peak output current . . . . . Internally limited
Output voltage, V_O (OUT, FB) . . . . . 7 V
Continuous total power dissipation . . . . . See dissipation rating tables
Operating virtual junction temperature range, T_J . . . . . −40°C to 125°C
Storage temperature range, T_{stg} . . . . . −65°C to 150°C
ESD rating, Human-Body Model (HBM) . . . . . 2 kV

† Stresses beyond those listed under “absolute maximum ratings” may cause permanent damage to the device. These are stress ratings only, and functional operation of the device at these or any other conditions beyond those indicated under “recommended operating conditions” is not implied. Exposure to absolute-maximum-rated conditions for extended periods may affect device reliability.
‡ All voltage values are with respect to network terminal ground.

DISSIPATION RATING TABLE − FREE-AIR TEMPERATURES

PACKAGE	AIR FLOW (CFM)	T_A < 25°C POWER RATING	DERATING FACTOR ABOVE T_A = 25°C	T_A = 70°C POWER RATING	T_A = 85°C POWER RATING
PWP§	0	2.9 W	23.5 mW/°C	1.9 W	1.5 W
	300	4.3 W	34.6 mW/°C	2.8 W	2.2 W
PWP¶	0	3 W	23.8 mW/°C	1.9 W	1.5 W
	300	7.2 W	57.9 mW/°C	4.6 W	3.8 W

§ This parameter is measured with the recommended copper heat-sink pattern on a 1-layer PCB, 5-in × 5-in PCB, 1-oz copper, 2-in × 2-in coverage (4 in^2).
¶ This parameter is measured with the recommended copper heat sink pattern on a 8-layer PCB, 1.5-in × 2-in PCB, 1-oz copper with layers 1, 2, 4, 5, 7, and 8 at 5% coverage (0.9 in^2) and layers 3 and 6 at 100% coverage (6 in^2). For more information, refer to TI technical brief SLMA002.

recommended operating conditions

	MIN	MAX	UNIT
Input voltage, V_I#	2.7	10	V
Output voltage range, V_O	1.5	5.5	V
Output current, I_O (see Note 1)	0	1.0	A
Operating virtual junction temperature, T_J (see Note 1)	−40	125	°C

To calculate the minimum input voltage for your maximum output current, use the following equation: $V_{I(min)} = V_{O(max)} + V_{DO(max\ load)}$.
NOTE 1: Continuous current and operating junction temperature are limited by internal protection circuitry, but it is not recommended that the device operate under conditions beyond those specified in this table for extended periods of time.

electrical characteristics over recommended operating free-air temperature range, $V_I = V_{O(typ)} + 1$ V, $I_O = 1$ mA, $\overline{EN} = 0$ V, $C_o = 10$ µF (unless otherwise noted)

PARAMETER		TEST CONDITIONS		MIN	TYP	MAX	UNIT
Output voltage (10 µA to 1 A load) (see Note 2)	TPS76701	1.5 V ≤ V_O ≤ 5.5 V,	T_J = 25°C		V_O		V
		1.5 V ≤ V_O ≤ 5.5 V,	T_J = −40°C to 125°C	0.98V_O		1.02V_O	
	TPS76715	T_J = 25°C,	2.7 V < V_{IN} < 10 V		1.5		
		T_J = −40°C to 125°C,	2.7 V < V_{IN} < 10 V	1.470		1.530	
	TPS76718	T_J = 25°C,	2.8 V < V_{IN} < 10 V		1.8		
		T_J = −40°C to 125°C,	2.8 V < V_{IN} < 10 V	1.764		1.836	
	TPS76725	T_J = 25°C,	3.5 V < V_{IN} < 10 V		2.5		
		T_J = −40°C to 125°C,	3.5 V < V_{IN} < 10 V	2.450		2.550	
	TPS76727	T_J = 25°C,	3.7 V < V_{IN} < 10 V		2.7		
		T_J = −40°C to 125°C,	3.7 V < V_{IN} < 10 V	2.646		2.754	
	TPS76728	T_J = 25°C,	3.8 V < V_{IN} < 10 V		2.8		
		T_J = −40°C to 125°C,	3.8 V < V_{IN} < 10 V	2.744		2.856	
	TPS76730	T_J = 25°C,	4.0 V < V_{IN} < 10 V		3.0		
		T_J = −40°C to 125°C,	4.0 V < V_{IN} < 10 V	2.940		3.060	
	TPS76733	T_J = 25°C,	4.3 V < V_{IN} < 10 V		3.3		
		T_J = −40°C to 125°C,	4.3 V < V_{IN} < 10 V	3.234		3.366	
	TPS76750	T_J = 25°C,	6.0 V < V_{IN} < 10 V		5.0		
		T_J = −40°C to 125°C,	6.0 V < V_{IN} < 10 V	4.900		5.100	
Quiescent current (GND current) $\overline{EN}$ = 0V, (see Note 2)		10 µA < I_O < 1 A,	T_J = 25°C		85		µA
		I_O = 1 A,	T_J = −40°C to 125°C			125	
Output voltage line regulation ($\Delta V_O/V_O$) (see Notes 2 and 3)		V_O + 1 V < V_I ≤ 10 V,	T_J = 25°C		0.01		%/V
Load regulation					3		mV
Output noise voltage (TPS76718)		BW = 200 Hz to 100 kHz, I_C = 1 A, C_O = 10 µF,	T_J = 25°C		55		µVrms
Output current limit		V_O = 0 V			1.7	2	A
Thermal shutdown junction temperature					150		°C
Standby current		$\overline{EN}$ = V_I,	T_J = 25°C, 2.7 V < V_I < 10 V		1		µA
		$\overline{EN}$ = V_I,	T_J = −40°C to 125°C 2.7 V < V_I < 10 V			10	
FB input current	TPS76701	FB = 1.5 V			2		nA
High-level enable input voltage				1.7			V
Low-level enable input voltage						0.9	V
Power-supply ripple rejection (see Note 2)		f = 1 KHz, T_J = 25°C	C_O = 10 µF,		60		dB

NOTES: 2. Minimum IN operating voltage is 2.7 V or $V_{O(typ)}$ + 1 V, whichever is greater. Maximum IN voltage 10 V.

3. If $V_O \le 1.8$ V then $V_{Imax} = 10$ V, $V_{Imin} = 2.7$ V:

$$\text{Line Regulation (mV)} = (\%/V) \times \frac{V_O\left(V_{Imax} - 2.7\ V\right)}{100} \times 1000$$

If $V_O \ge 2.5$ V then $V_{Imax} = 10$ V, $V_{Imin} = V_O + 1$ V:

$$\text{Line Regulation (mV)} = (\%/V) \times \frac{V_O\left(V_{Imax} - \left(V_O + 1\ V\right)\right)}{100} \times 1000$$

electrical characteristics over recommended operating free-air temperature range, $V_I = V_{O(typ)} + 1$ V, $I_O = 1$ mA, $\overline{EN} = 0$ V, $C_o = 10$ μF (unless otherwise noted) (continued)

PARAMETER			TEST CONDITIONS		MIN	TYP	MAX	UNIT
Reset	Minimum input voltage for valid $\overline{RESET}$		$I_{O(RESET)}$ = 300 μA			1.1		V
	Trip threshold voltage		V_O decreasing		92		98	$\%V_O$
	Hysteresis voltage		Measured at V_O			0.5		$\%V_O$
	Output low voltage		V_I = 2.7 V,	$I_{O(RESET)}$ = 1 mA		0.15	0.4	V
	Leakage current		$V_{(RESET)}$ = 5 V				1	μA
	RESET time-out delay					200		ms
Input current ($\overline{EN}$)			$\overline{EN}$ = 0 V		−1	0	1	μA
			$\overline{EN}$ = V_I		−1		1	
Dropout voltage (see Note 4)		TPS76728	I_O = 1 A,	T_J = 25°C		500		mV
			I_O = 1 A,	T_J = −40°C to 125°C			825	
		TPS76730	I_O = 1 A,	T_J = 25°C		450		
			I_O = 1 A,	T_J = −40°C to 125°C			675	
		TPS76733	I_O = 1 A,	T_J = 25°C		350		
			I_O = 1 A,	T_J = −40°C to 125°C			575	
		TPS76750	I_O = 1 A,	T_J = 25°C		230		
			I_O = 1 A,	T_J = −40°C to 125°C			380	

NOTE 4: IN voltage equals V_O(typ) − 100 mV; TPS76701 output voltage set to 3.3 V nominal with external resistor divider. TPS76715, TPS76718, TPS76725, and TPS76727 dropout voltage limited by input voltage range limitations (i.e., TPS76730 input voltage needs to drop to 2.9 V for purpose of this test).

TYPICAL CHARACTERISTICS

Table of Graphs

			FIGURE
V_O	Output voltage	vs Output current	2, 3, 4
		vs Free-air temperature	5, 6, 7
	Ground current	vs Free-air temperature	8, 9
	Power-supply ripple rejection	vs Frequency	10
	Output spectral noise density	vs Frequency	11
	Input voltage (min)	vs Output voltage	12
Z_o	Output impedance	vs Frequency	13
V_{DO}	Dropout voltage	vs Free-air temperature	14
	Line transient response		15, 17
	Load transient response		16, 18
V_O	Output voltage	vs Time	19
	Dropout voltage	vs Input voltage	20
	Equivalent series resistance (ESR)	vs Output current	22−25

TYPICAL CHARACTERISTICS

TPS76733
OUTPUT VOLTAGE vs OUTPUT CURRENT

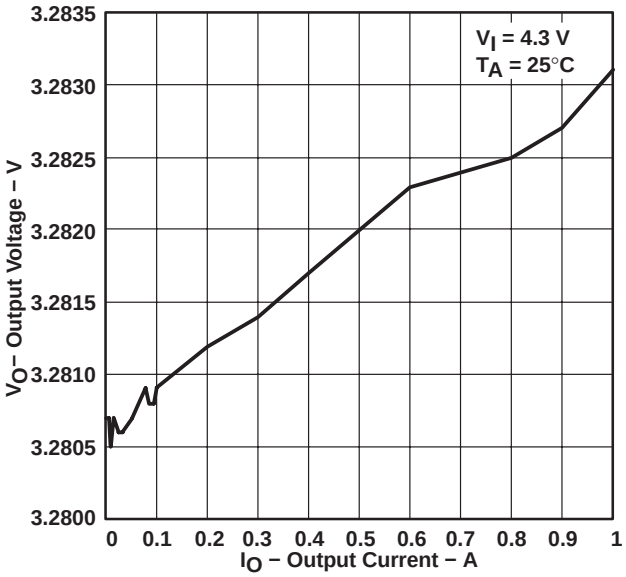

Figure 2

TPS76715
OUTPUT VOLTAGE vs OUTPUT CURRENT

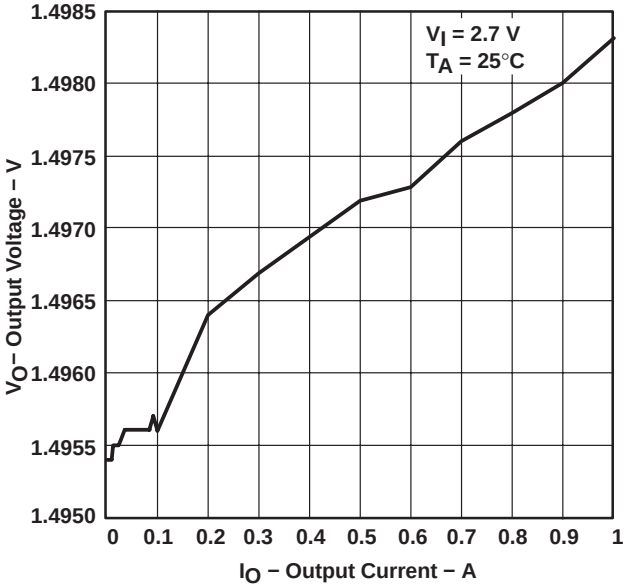

Figure 3

TPS76725
OUTPUT VOLTAGE vs OUTPUT CURRENT

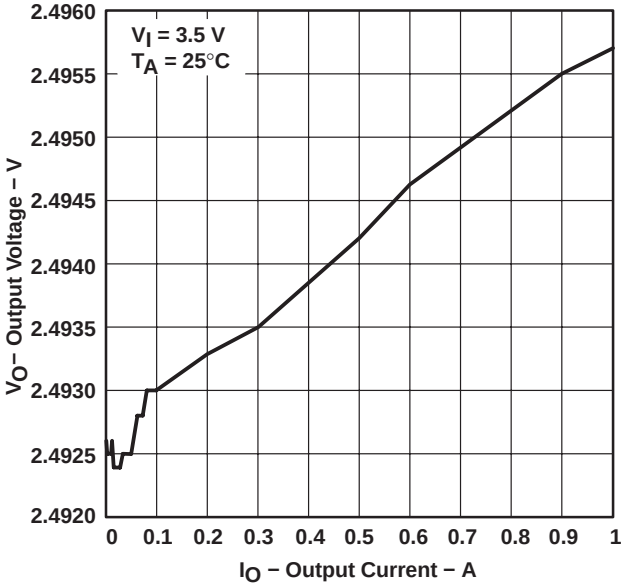

Figure 4

TPS76733
OUTPUT VOLTAGE vs FREE-AIR TEMPERATURE

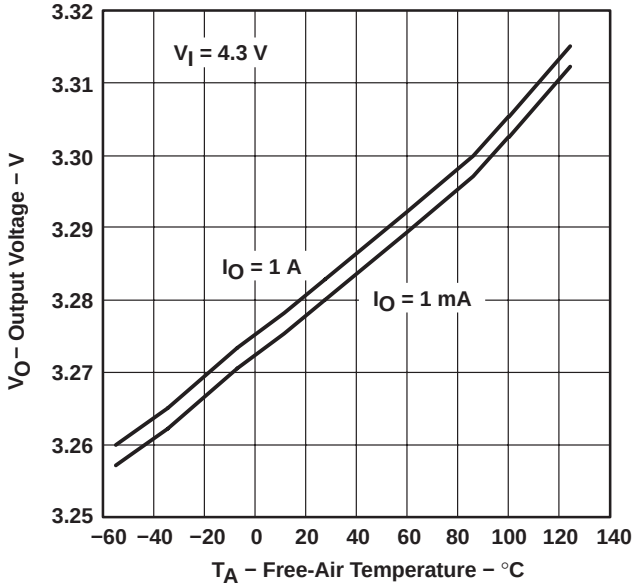

Figure 5

TYPICAL CHARACTERISTICS

TPS76715
OUTPUT VOLTAGE
vs
FREE-AIR TEMPERATURE

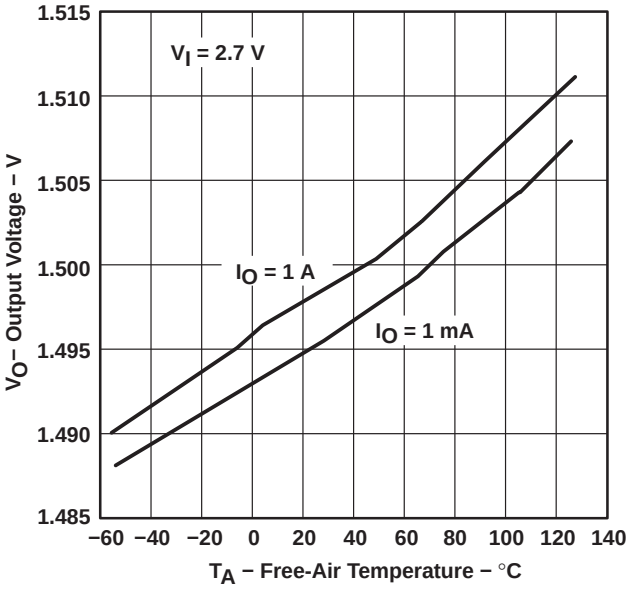

Figure 6

TPS76725
OUTPUT VOLTAGE
vs
FREE-AIR TEMPERATURE

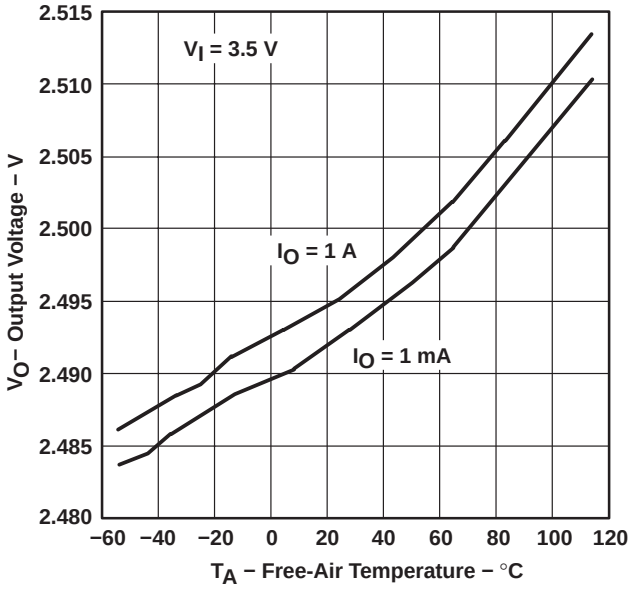

Figure 7

TPS76733
GROUND CURRENT
vs
FREE-AIR TEMPERATURE

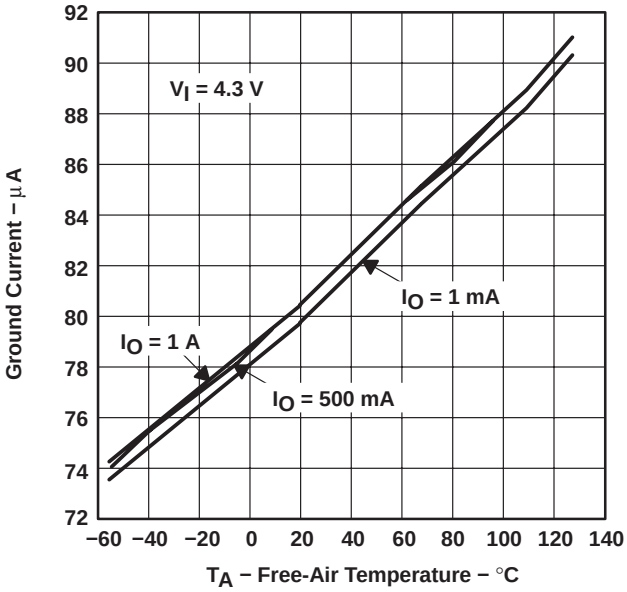

Figure 8

TYPICAL CHARACTERISTICS

TPS76715
GROUND CURRENT
vs
FREE-AIR TEMPERATURE

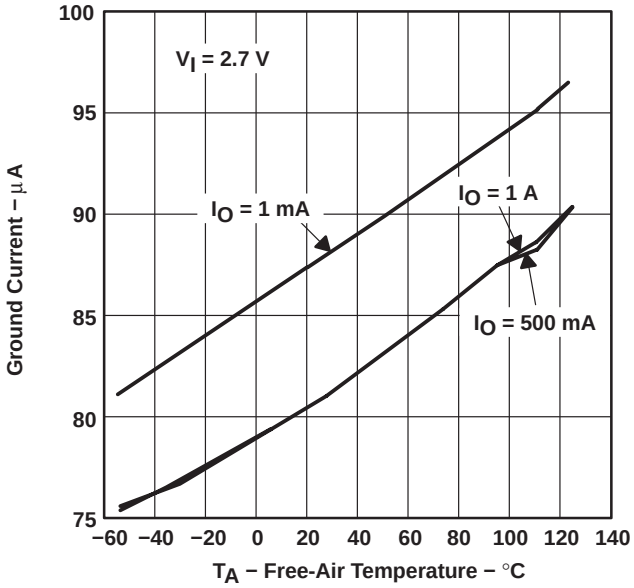

Figure 9

TPS76733
POWER-SUPPLY RIPPLE REJECTION
vs
FREQUENCY

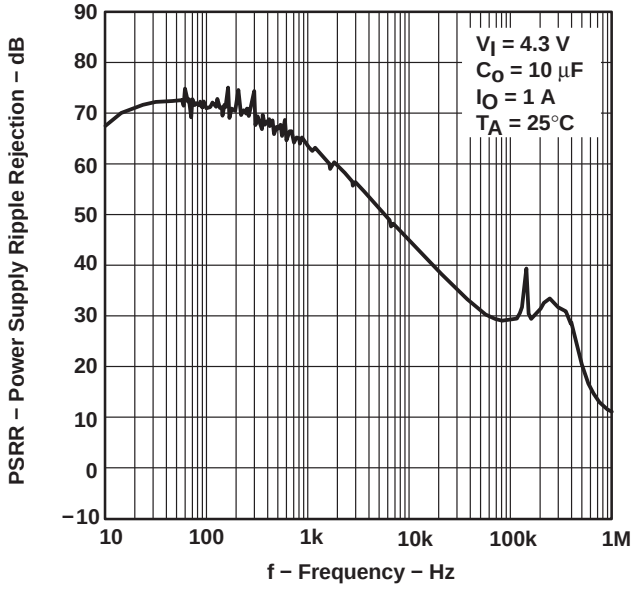

Figure 10

TPS76733
OUTPUT SPECTRAL NOISE DENSITY
vs
FREQUENCY

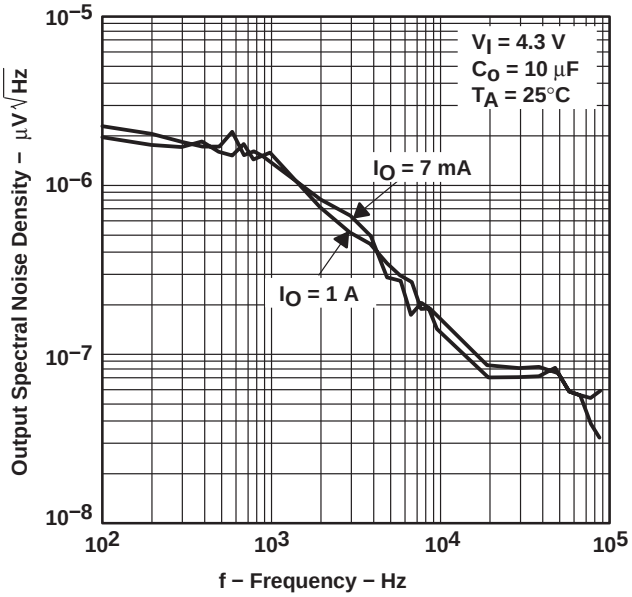

Figure 11

TYPICAL CHARACTERISTICS

**INPUT VOLTAGE (MIN)
vs
OUTPUT VOLTAGE**

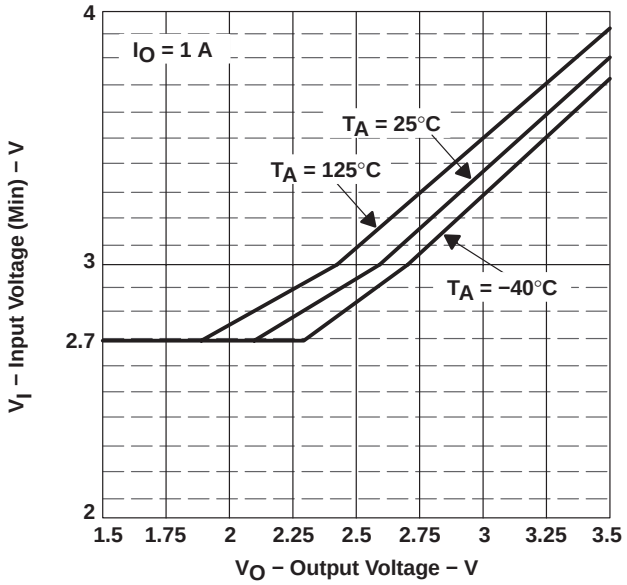

Figure 12

**TPS76733
OUTPUT IMPEDANCE
vs
FREQUENCY**

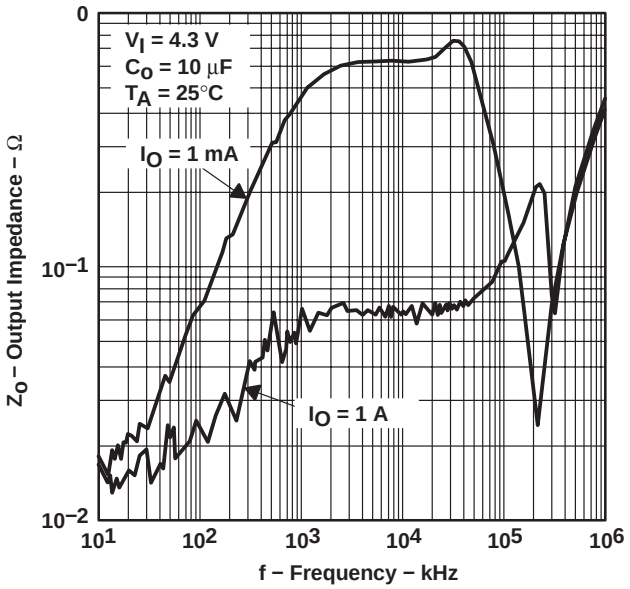

Figure 13

**TPS76733
DROPOUT VOLTAGE
vs
FREE-AIR TEMPERATURE**

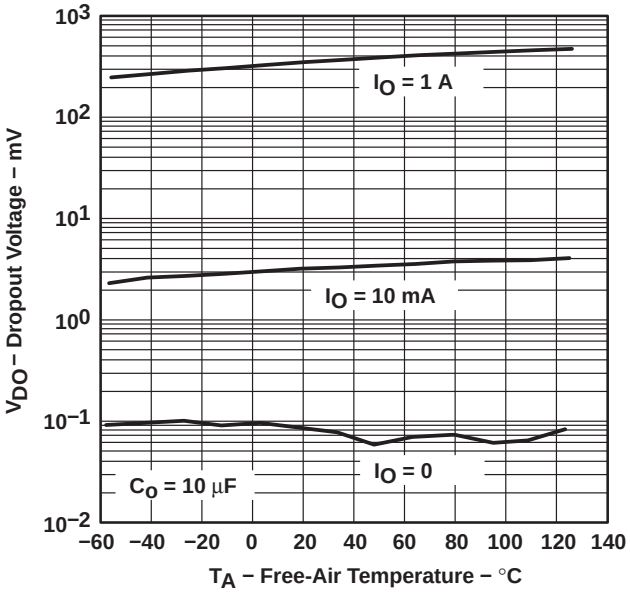

Figure 14

TYPICAL CHARACTERISTICS

TPS76715
LINE TRANSIENT RESPONSE

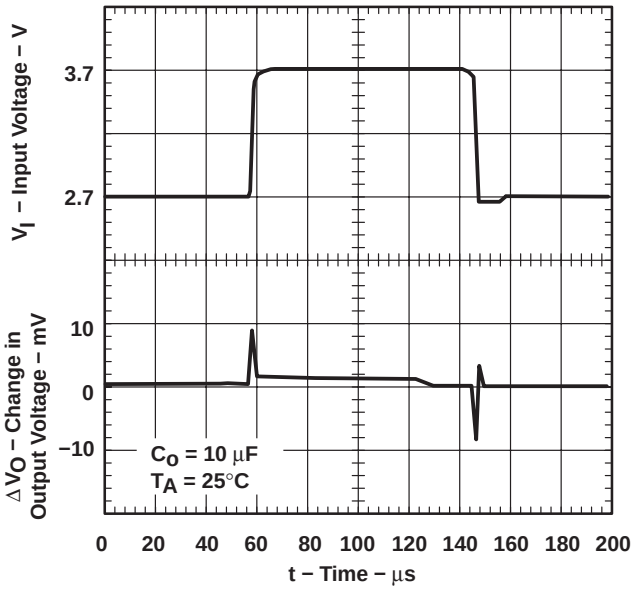

Figure 15

TPS76715
LOAD TRANSIENT RESPONSE

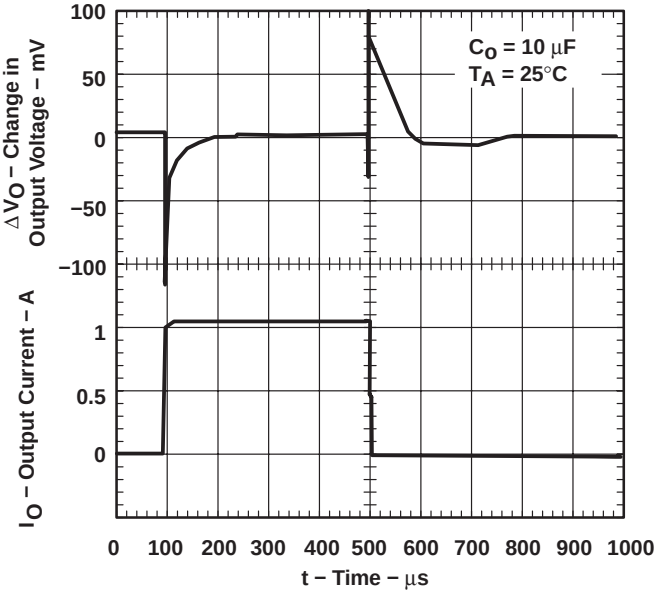

Figure 16

TPS76733
LINE TRANSIENT RESPONSE

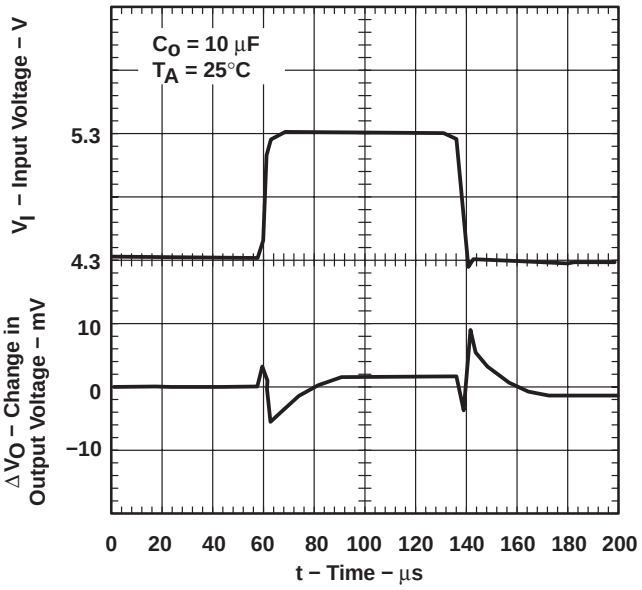

Figure 17

TPS76733
LOAD TRANSIENT RESPONSE

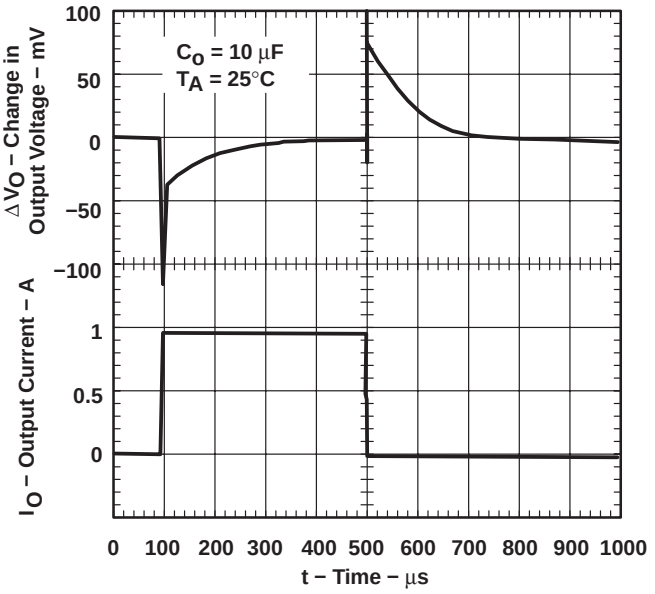

Figure 18

TYPICAL CHARACTERISTICS

TPS76733
OUTPUT VOLTAGE
vs
TIME (AT STARTUP)

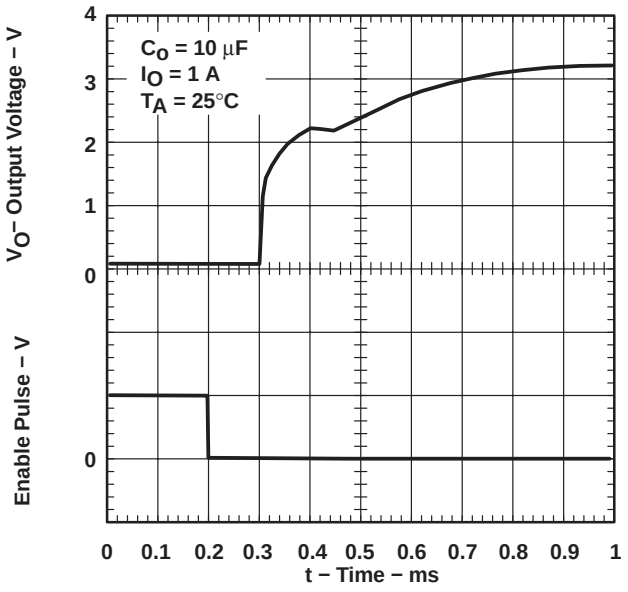

Figure 19

TPS76701
DROPOUT VOLTAGE
vs
INPUT VOLTAGE

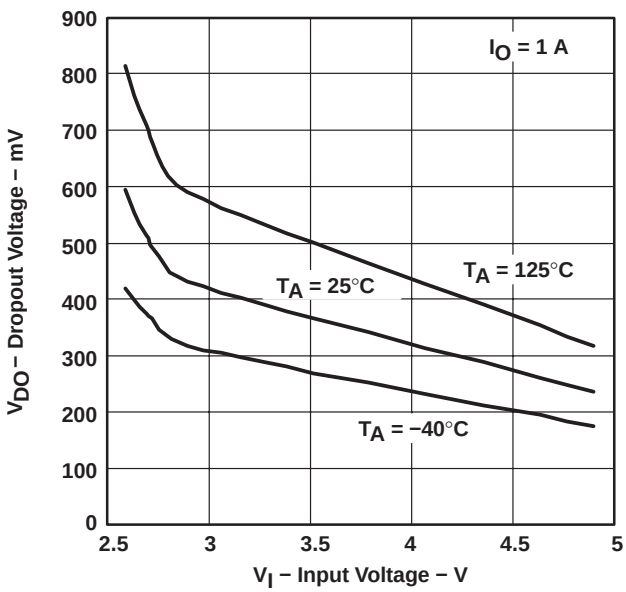

Figure 20

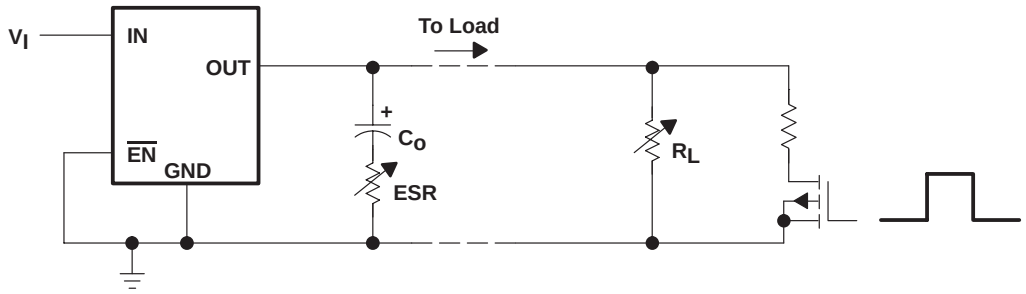

Figure 21. Test Circuit for Typical Regions of Stability (Figures 22 Through 25) (Fixed-Output Options)

TYPICAL CHARACTERISTICS

TYPICAL REGION OF STABILITY
EQUIVALENT SERIES RESISTANCE† vs OUTPUT CURRENT

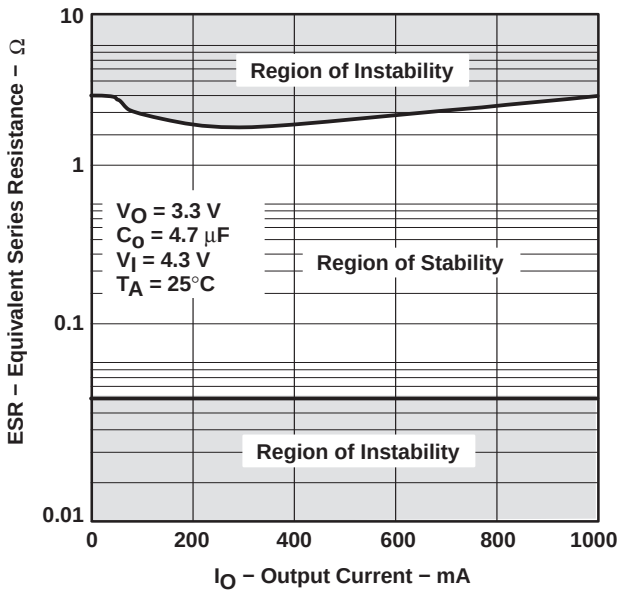

Figure 22

TYPICAL REGION OF STABILITY
EQUIVALENT SERIES RESISTANCE† vs OUTPUT CURRENT

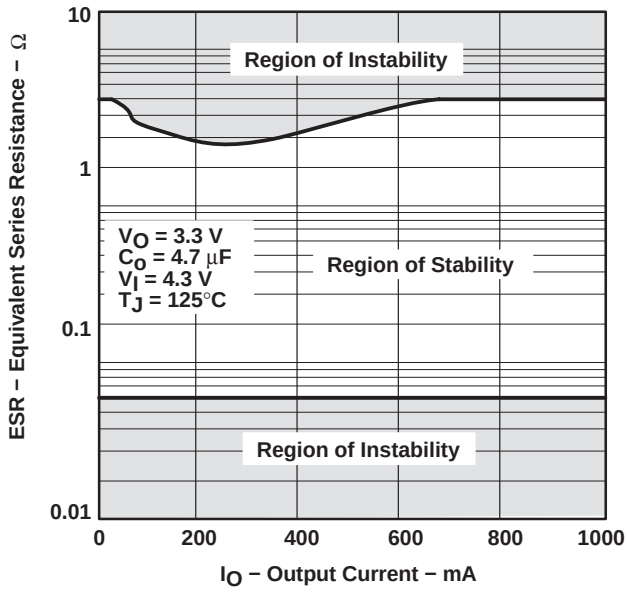

Figure 23

TYPICAL REGION OF STABILITY
EQUIVALENT SERIES RESISTANCE† vs OUTPUT CURRENT

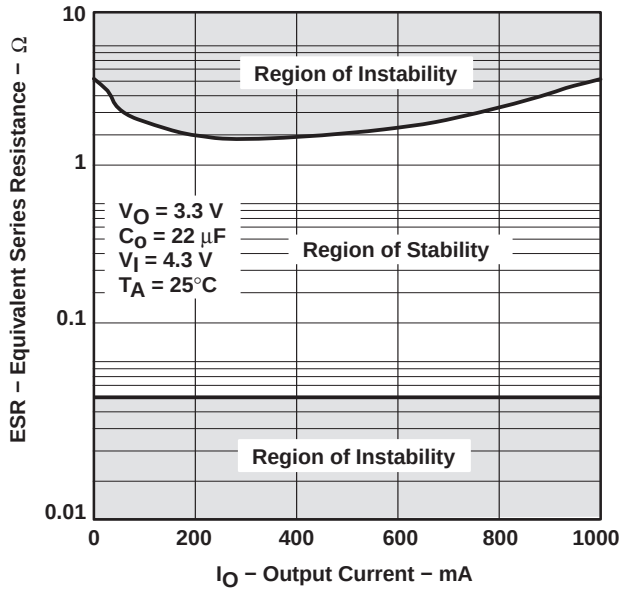

Figure 24

TYPICAL REGION OF STABILITY
EQUIVALENT SERIES RESISTANCE† vs OUTPUT CURRENT

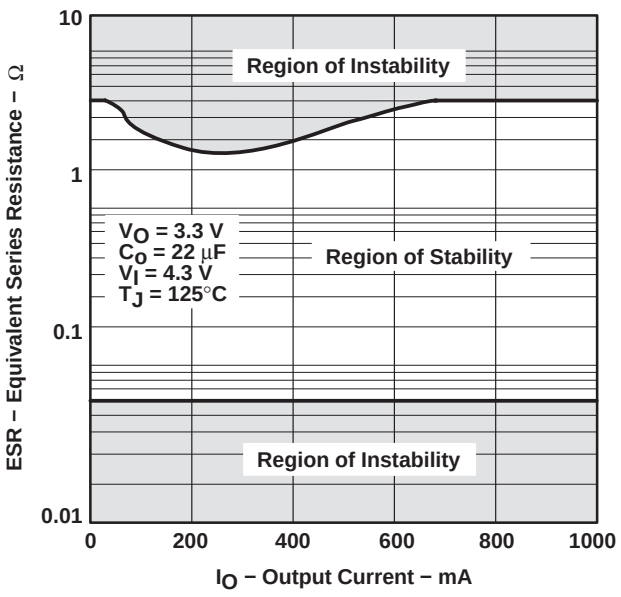

Figure 25

† Equivalent series resistance (ESR) refers to the total series resistance, including the ESR of the capacitor, any series resistance added externally, and PWB trace resistance to C_O.

APPLICATION INFORMATION

The TPS767xx family includes eight fixed-output voltage regulators (1.5 V, 1.8 V, 2.5 V, 2.7 V, 2.8 V, 3 V, 3.3 V, and 5 V), and an adjustable regulator, the TPS76701 (adjustable from 1.5 V to 5.5 V).

device operation

The TPS767xx features very low quiescent current, which remains virtually constant even with varying loads. Conventional LDO regulators use a pnp pass element, the base current of which is directly proportional to the load current through the regulator ($I_B = I_C/\beta$). The TPS767xx uses a PMOS transistor to pass current; because the gate of the PMOS is voltage driven, operating current is low and invariable over the full load range.

Another pitfall associated with the pnp-pass element is its tendency to saturate when the device goes into dropout. The resulting drop in β forces an increase in I_B to maintain the load. During power up, this translates to large start-up currents. Systems with limited supply current may fail to start up. In battery-powered systems, it means rapid battery discharge when the voltage decays below the minimum required for regulation. The TPS767xx quiescent current remains low even when the regulator drops out, eliminating both problems.

The TPS767xx family also features a shutdown mode that places the output in the high-impedance state (essentially equal to the feedback-divider resistance) and reduces quiescent current to 2 μA. If the shutdown feature is not used, $\overline{EN}$ should be tied to ground.

minimum load requirements

The TPS767xx family is stable even at zero load; no minimum load is required for operation.

FB—pin connection (adjustable version only)

The FB pin is an input pin to sense the output voltage and close the loop for the adjustable option . The output voltage is sensed through a resistor divider network to close the loop as shown in Figure 27. Normally, this connection should be as short as possible; however, the connection can be made near a critical circuit to improve performance at that point. Internally, FB connects to a high-impedance wide-bandwidth amplifier and noise pickup feeds through to the regulator output. Routing the FB connection to minimize/avoid noise pickup is essential.

external capacitor requirements

An input capacitor is not usually required; however, a ceramic bypass capacitor (0.047 μF or larger) improves load transient response and noise rejection if the TPS767xx is located more than a few inches from the power supply. A higher-capacitance electrolytic capacitor may be necessary if large (hundreds of milliamps) load transients with fast rise times are anticipated.

Like all low dropout regulators, the TPS767xx requires an output capacitor connected between OUT and GND to stabilize the internal control loop. The minimum recommended capacitance value is 10 μF and the equivalent series resistance (ESR) must be between 50 mΩ and 1.5 Ω. Capacitor values 10 μF or larger are acceptable, provided the ESR is less than 1.5 Ω. Solid tantalum electrolytic, aluminum electrolytic, and multilayer ceramic capacitors are all suitable, provided they meet the requirements described above. Most of the commercially available 10-μF surface-mount ceramic capacitors, including devices from Sprague and Kemet, meet the ESR requirements stated above.

APPLICATION INFORMATION

external capacitor requirements (continued)

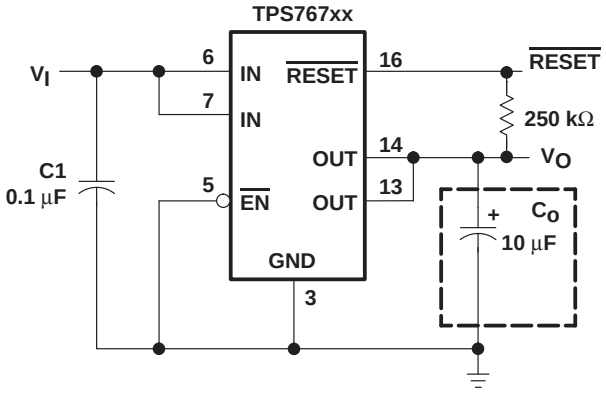

Figure 26. Typical Application Circuit (Fixed Versions)

programming the TPS76701 adjustable LDO regulator

The output voltage of the TPS76701 adjustable regulator is programmed using an external resistor divider as shown in Figure 27. The output voltage is calculated using:

$$V_O = V_{ref} \times \left(1 + \frac{R1}{R2}\right) \quad (1)$$

Where:

V_{ref} = 1.1834 V typ (the internal reference voltage)

Resistors R1 and R2 should be chosen for approximately 50-μA divider current. Lower value resistors can be used but offer no inherent advantage and waste more power. Higher values should be avoided as leakage currents at FB increase the output voltage error. The recommended design procedure is to choose R2 = 30.1 kΩ to set the divider current at 50 μA and then calculate R1 using:

$$R1 = \left(\frac{V_O}{V_{ref}} - 1\right) \times R2 \quad (2)$$

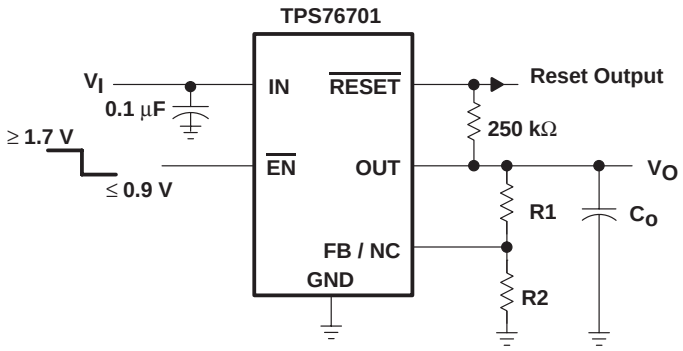

OUTPUT VOLTAGE PROGRAMMING GUIDE

OUTPUT VOLTAGE	R1	R2	UNIT
2.5 V	33.2	30.1	kΩ
3.3 V	53.6	30.1	kΩ
3.6 V	61.9	30.1	kΩ
4.75 V	90.8	30.1	kΩ

Figure 27. TPS76701 Adjustable LDO Regulator Programming

APPLICATION INFORMATION

reset indicator

The TPS767xx features a $\overline{\text{RESET}}$ output that can be used to monitor the status of the regulator. The internal comparator monitors the output voltage: when the output drops to between 92% and 98% of its nominal regulated value, the $\overline{\text{RESET}}$ output transistor turns on, taking the signal low. The open-drain output requires a pullup resistor. If not used, it can be left floating. $\overline{\text{RESET}}$ can be used to drive power-on reset circuitry or as a low-battery indicator. $\overline{\text{RESET}}$ does not assert itself when the regulated output voltage falls outside the specified 2% tolerance, but instead reports an output voltage low relative to its nominal regulated value (refer to timing diagram for start-up sequence).

regulator protection

The TPS767xx PMOS pass transistor has a built-in back diode that conducts reverse currents when the input voltage drops below the output voltage (e.g., during power down). Current is conducted from the output to the input and is not internally limited. When extended reverse voltage is anticipated, external limiting may be appropriate.

The TPS767xx also features internal current limiting and thermal protection. During normal operation, the TPS767xx limits output current to approximately 1.7 A. When current limiting engages, the output voltage scales back linearly until the overcurrent condition ends. While current limiting is designed to prevent gross device failure, care should be taken not to exceed the power dissipation ratings of the package. If the temperature of the device exceeds 150°C (typ), thermal-protection circuitry shuts it down. Once the device has cooled below 130°C (typ), regulator operation resumes.

power dissipation and junction temperature

Specified regulator operation is assured to a junction temperature of 125°C; the maximum junction temperature should be restricted to 125°C under normal operating conditions. This restriction limits the power dissipation the regulator can handle in any given application. To ensure the junction temperature is within acceptable limits, calculate the maximum allowable dissipation, $P_{D(max)}$, and the actual dissipation, P_D, which must be less than or equal to $P_{D(max)}$.

The maximum power dissipation limit is determined using the following equation:

$$P_{D(max)} = \frac{T_J max - T_A}{R_{\theta JA}}$$

Where:

$T_J max$ is the maximum allowable junction temperature.

$R_{\theta JA}$ is the thermal resistance junction-to-ambient for the package, i.e., 172°C/W for the 8-terminal SOIC and 32.6°C/W for the 20-terminal PWP with no airflow.

T_A is the ambient temperature.

The regulator dissipation is calculated using:

$$P_D = \left(V_I - V_O\right) \times I_O$$

Power dissipation resulting from quiescent current is negligible. Excessive power dissipation triggers the thermal protection circuit.

PACKAGING INFORMATION

Orderable part number	Status (1)	Material type (2)	Package | Pins	Package qty | Carrier	RoHS (3)	Lead finish/ Ball material (4)	MSL rating/ Peak reflow (5)	Op temp (°C)	Part marking (6)
TPS76733QPWPRQ1	Active	Production	HTSSOP (PWP) | 20	2000 | LARGE T&R	Yes	NIPDAU	Level-3-260C-168 HR	-40 to 125	76733Q1
TPS76733QPWPRQ1.A	Active	Production	HTSSOP (PWP) | 20	2000 | LARGE T&R	Yes	NIPDAU	Level-3-260C-168 HR	-40 to 125	76733Q1
TPS76750QPWPRQ1	Active	Production	HTSSOP (PWP) | 20	2000 | LARGE T&R	Yes	NIPDAU	Level-3-260C-168 HR	-40 to 125	76750Q1
TPS76750QPWPRQ1.A	Active	Production	HTSSOP (PWP) | 20	2000 | LARGE T&R	Yes	NIPDAU	Level-3-260C-168 HR	-40 to 125	76750Q1

(1) **Status:** For more details on status, see our product life cycle.

(2) **Material type:** When designated, preproduction parts are prototypes/experimental devices, and are not yet approved or released for full production. Testing and final process, including without limitation quality assurance, reliability performance testing, and/or process qualification, may not yet be complete, and this item is subject to further changes or possible discontinuation. If available for ordering, purchases will be subject to an additional waiver at checkout, and are intended for early internal evaluation purposes only. These items are sold without warranties of any kind.

(3) **RoHS values:** Yes, No, RoHS Exempt. See the TI RoHS Statement for additional information and value definition.

(4) **Lead finish/Ball material:** Parts may have multiple material finish options. Finish options are separated by a vertical ruled line. Lead finish/Ball material values may wrap to two lines if the finish value exceeds the maximum column width.

(5) **MSL rating/Peak reflow:** The moisture sensitivity level ratings and peak solder (reflow) temperatures. In the event that a part has multiple moisture sensitivity ratings, only the lowest level per JEDEC standards is shown. Refer to the shipping label for the actual reflow temperature that will be used to mount the part to the printed circuit board.

(6) **Part marking:** There may be an additional marking, which relates to the logo, the lot trace code information, or the environmental category of the part.

Multiple part markings will be inside parentheses. Only one part marking contained in parentheses and separated by a "~" will appear on a part. If a line is indented then it is a continuation of the previous line and the two combined represent the entire part marking for that device.

Important Information and Disclaimer: The information provided on this page represents TI's knowledge and belief as of the date that it is provided. TI bases its knowledge and belief on information provided by third parties, and makes no representation or warranty as to the accuracy of such information. Efforts are underway to better integrate information from third parties. TI has taken and continues to take reasonable steps to provide representative and accurate information but may not have conducted destructive testing or chemical analysis on incoming materials and chemicals. TI and TI suppliers consider certain information to be proprietary, and thus CAS numbers and other limited information may not be available for release.

In no event shall TI's liability arising out of such information exceed the total purchase price of the TI part(s) at issue in this document sold by TI to Customer on an annual basis.

OTHER QUALIFIED VERSIONS OF TPS767-Q1 :

- Catalog : TPS767

NOTE: Qualified Version Definitions:

- Catalog - TI's standard catalog product

TAPE AND REEL INFORMATION

REEL DIMENSIONS

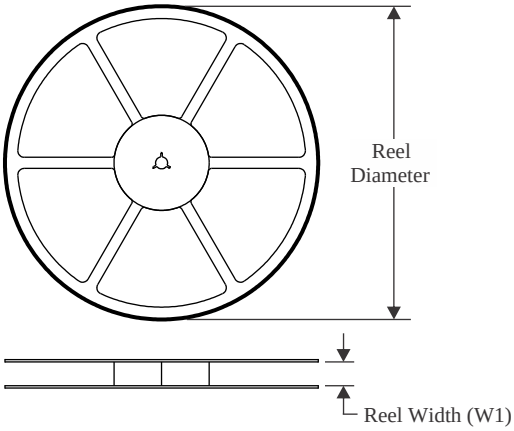

TAPE DIMENSIONS

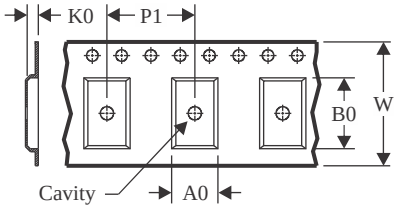

A0	Dimension designed to accommodate the component width
B0	Dimension designed to accommodate the component length
K0	Dimension designed to accommodate the component thickness
W	Overall width of the carrier tape
P1	Pitch between successive cavity centers

QUADRANT ASSIGNMENTS FOR PIN 1 ORIENTATION IN TAPE

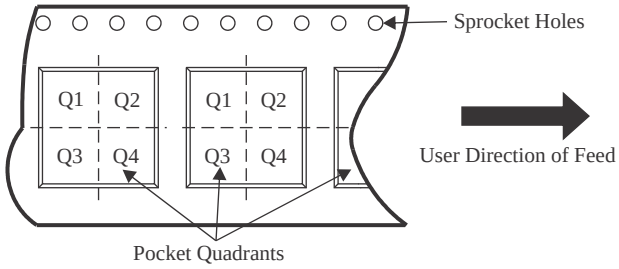

*All dimensions are nominal

Device	Package Type	Package Drawing	Pins	SPQ	Reel Diameter (mm)	Reel Width W1 (mm)	A0 (mm)	B0 (mm)	K0 (mm)	P1 (mm)	W (mm)	Pin1 Quadrant
TPS76733QPWPRQ1	HTSSOP	PWP	20	2000	330.0	16.4	6.95	7.1	1.6	8.0	16.0	Q1
TPS76750QPWPRQ1	HTSSOP	PWP	20	2000	330.0	16.4	6.95	7.1	1.6	8.0	16.0	Q1

TAPE AND REEL BOX DIMENSIONS

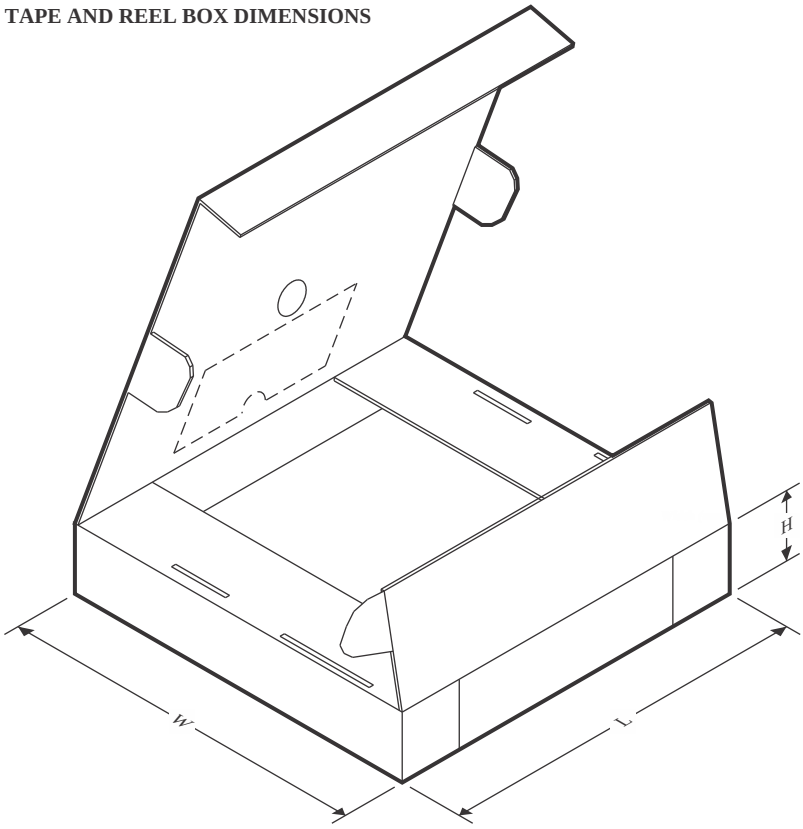

*All dimensions are nominal

Device	Package Type	Package Drawing	Pins	SPQ	Length (mm)	Width (mm)	Height (mm)
TPS76733QPWPRQ1	HTSSOP	PWP	20	2000	350.0	350.0	43.0
TPS76750QPWPRQ1	HTSSOP	PWP	20	2000	350.0	350.0	43.0

GENERIC PACKAGE VIEW

PWP 20

HTSSOP - 1.2 mm max height

6.5 x 4.4, 0.65 mm pitch

SMALL OUTLINE PACKAGE

This image is a representation of the package family, actual package may vary.
Refer to the product data sheet for package details.

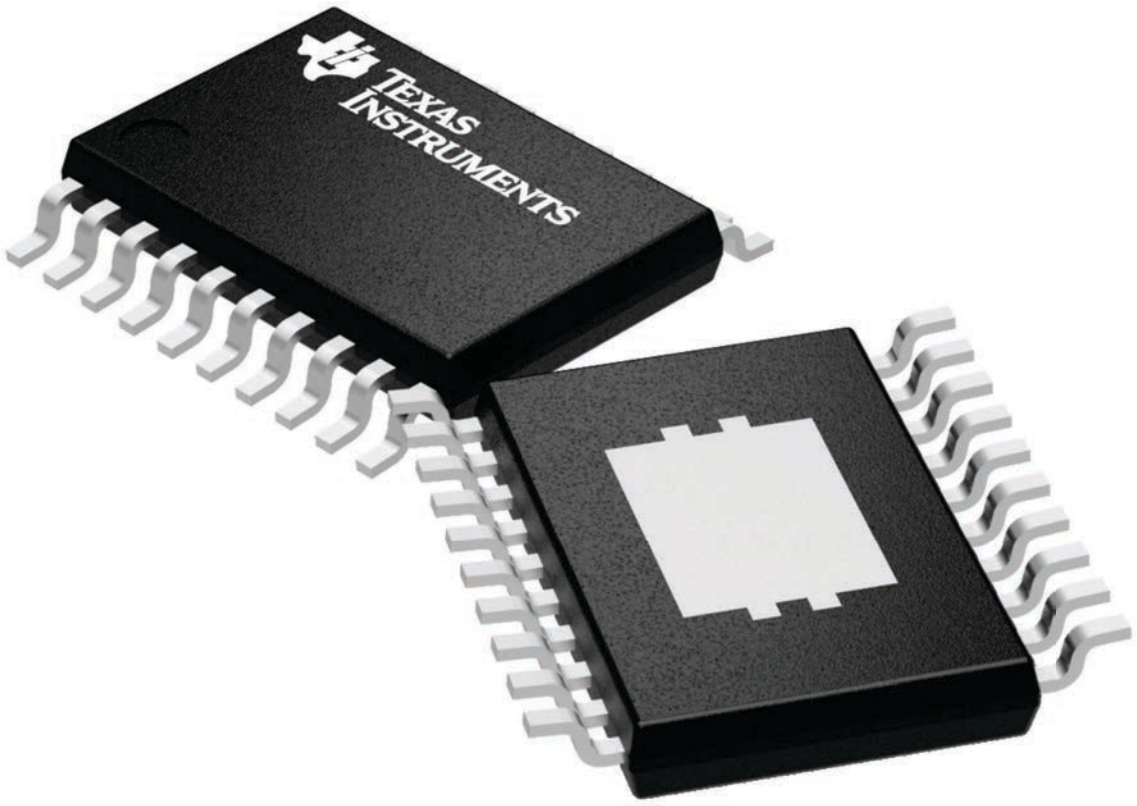

4224669/A

PWP (R–PDSO–G20) PowerPAD™ PLASTIC SMALL OUTLINE

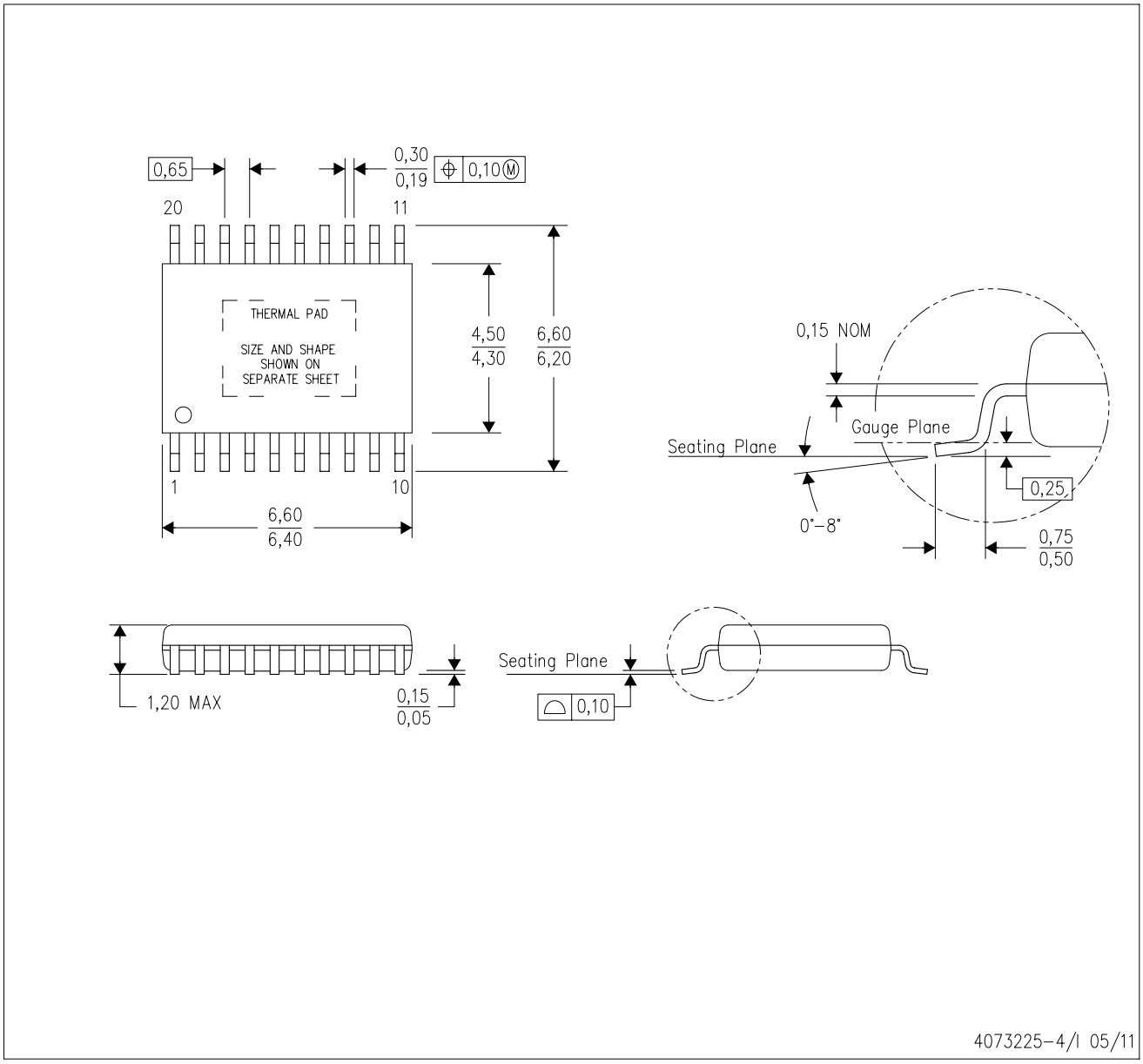

NOTES:
A. All linear dimensions are in millimeters.
B. This drawing is subject to change without notice.
C. Body dimensions do not include mold flash or protrusions. Mold flash and protrusion shall not exceed 0.15 per side.
D. This package is designed to be soldered to a thermal pad on the board. Refer to Technical Brief, PowerPad Thermally Enhanced Package, Texas Instruments Literature No. SLMA002 for information regarding recommended board layout. This document is available at www.ti.com <http://www.ti.com>.
E. See the additional figure in the Product Data Sheet for details regarding the exposed thermal pad features and dimensions.
E. Falls within JEDEC MO–153

PowerPAD is a trademark of Texas Instruments.

PWP (R–PDSO–G20) PowerPAD™ SMALL PLASTIC OUTLINE

THERMAL INFORMATION

This PowerPAD™ package incorporates an exposed thermal pad that is designed to be attached to a printed circuit board (PCB). The thermal pad must be soldered directly to the PCB. After soldering, the PCB can be used as a heatsink. In addition, through the use of thermal vias, the thermal pad can be attached directly to the appropriate copper plane shown in the electrical schematic for the device, or alternatively, can be attached to a special heatsink structure designed into the PCB. This design optimizes the heat transfer from the integrated circuit (IC).

For additional information on the PowerPAD package and how to take advantage of its heat dissipating abilities, refer to Technical Brief, PowerPAD Thermally Enhanced Package, Texas Instruments Literature No. SLMA002 and Application Brief, PowerPAD Made Easy, Texas Instruments Literature No. SLMA004. Both documents are available at www.ti.com.

The exposed thermal pad dimensions for this package are shown in the following illustration.

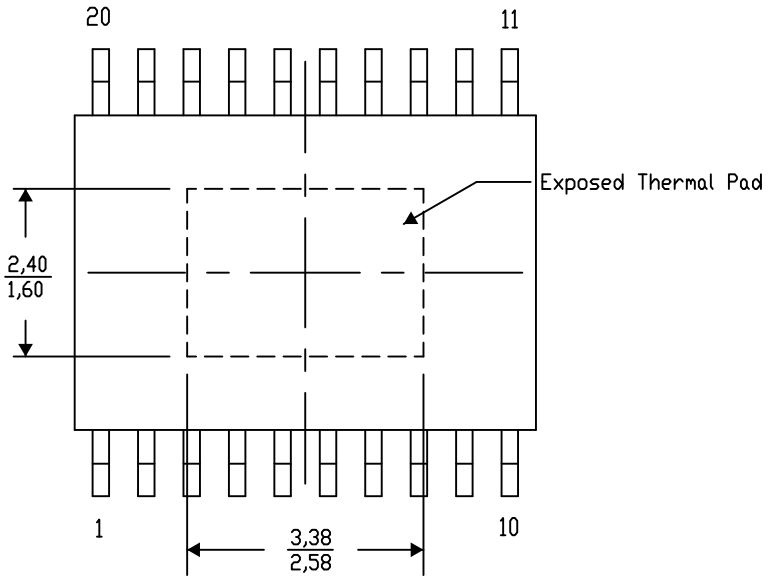

Top View

Exposed Thermal Pad Dimensions

4206332–21/AO 01/16

NOTE: A. All linear dimensions are in millimeters

PowerPAD is a trademark of Texas Instruments

PWP (R–PDSO–G20) PowerPAD™ PLASTIC SMALL OUTLINE

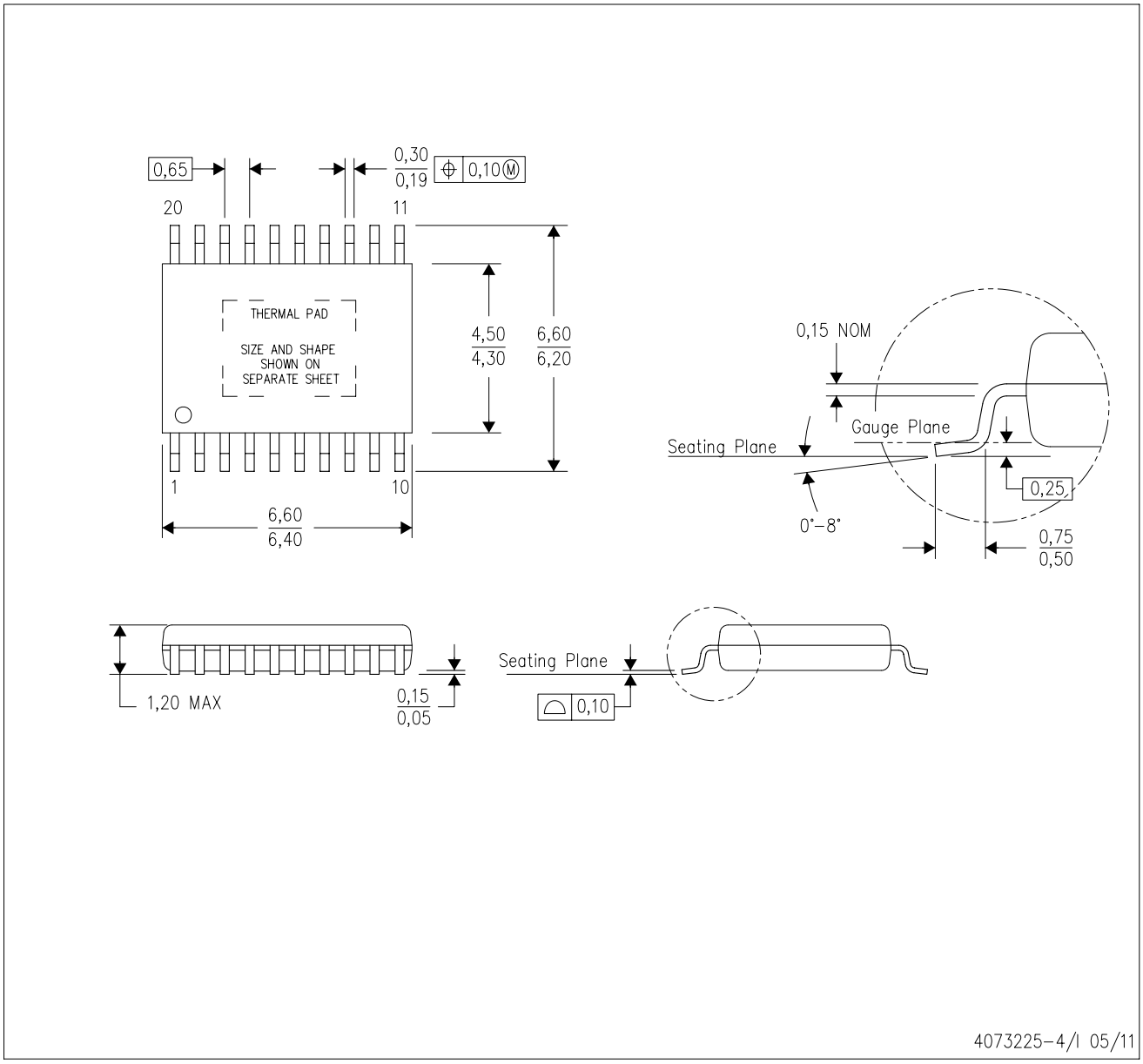

NOTES:
A. All linear dimensions are in millimeters.
B. This drawing is subject to change without notice.
C. Body dimensions do not include mold flash or protrusions. Mold flash and protrusion shall not exceed 0.15 per side.
D. This package is designed to be soldered to a thermal pad on the board. Refer to Technical Brief, PowerPad Thermally Enhanced Package, Texas Instruments Literature No. SLMA002 for information regarding recommended board layout. This document is available at www.ti.com <http://www.ti.com>.
E. See the additional figure in the Product Data Sheet for details regarding the exposed thermal pad features and dimensions.
E. Falls within JEDEC MO–153

PowerPAD is a trademark of Texas Instruments.

PWP (R–PDSO–G20) PowerPAD™ SMALL PLASTIC OUTLINE

THERMAL INFORMATION

This PowerPAD™ package incorporates an exposed thermal pad that is designed to be attached to a printed circuit board (PCB). The thermal pad must be soldered directly to the PCB. After soldering, the PCB can be used as a heatsink. In addition, through the use of thermal vias, the thermal pad can be attached directly to the appropriate copper plane shown in the electrical schematic for the device, or alternatively, can be attached to a special heatsink structure designed into the PCB. This design optimizes the heat transfer from the integrated circuit (IC).

For additional information on the PowerPAD package and how to take advantage of its heat dissipating abilities, refer to Technical Brief, PowerPAD Thermally Enhanced Package, Texas Instruments Literature No. SLMA002 and Application Brief, PowerPAD Made Easy, Texas Instruments Literature No. SLMA004. Both documents are available at www.ti.com.

The exposed thermal pad dimensions for this package are shown in the following illustration.

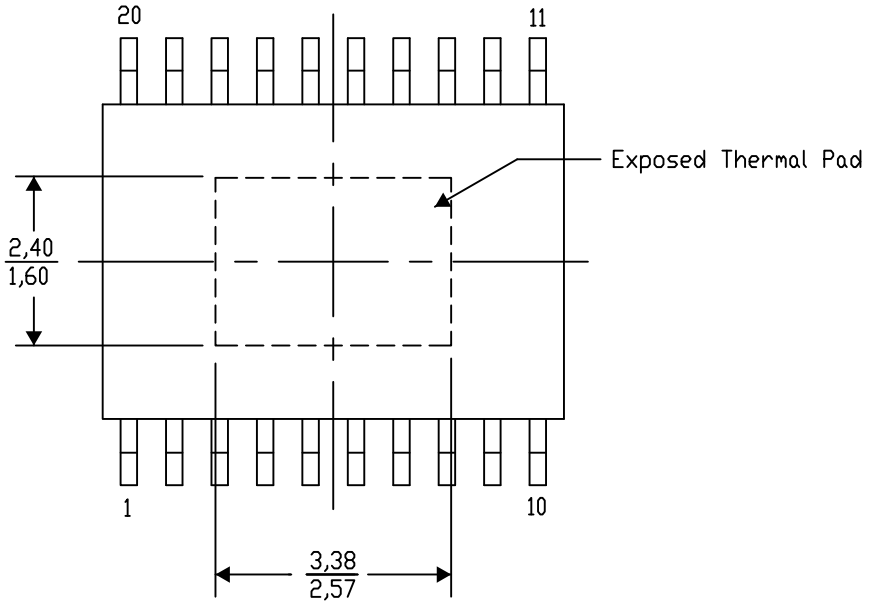

Top View

Exposed Thermal Pad Dimensions

4206332–13/AO 01/16

NOTE: A. All linear dimensions are in millimeters

PowerPAD is a trademark of Texas Instruments

PWP (R–PDSO–G20) PowerPAD™ PLASTIC SMALL OUTLINE

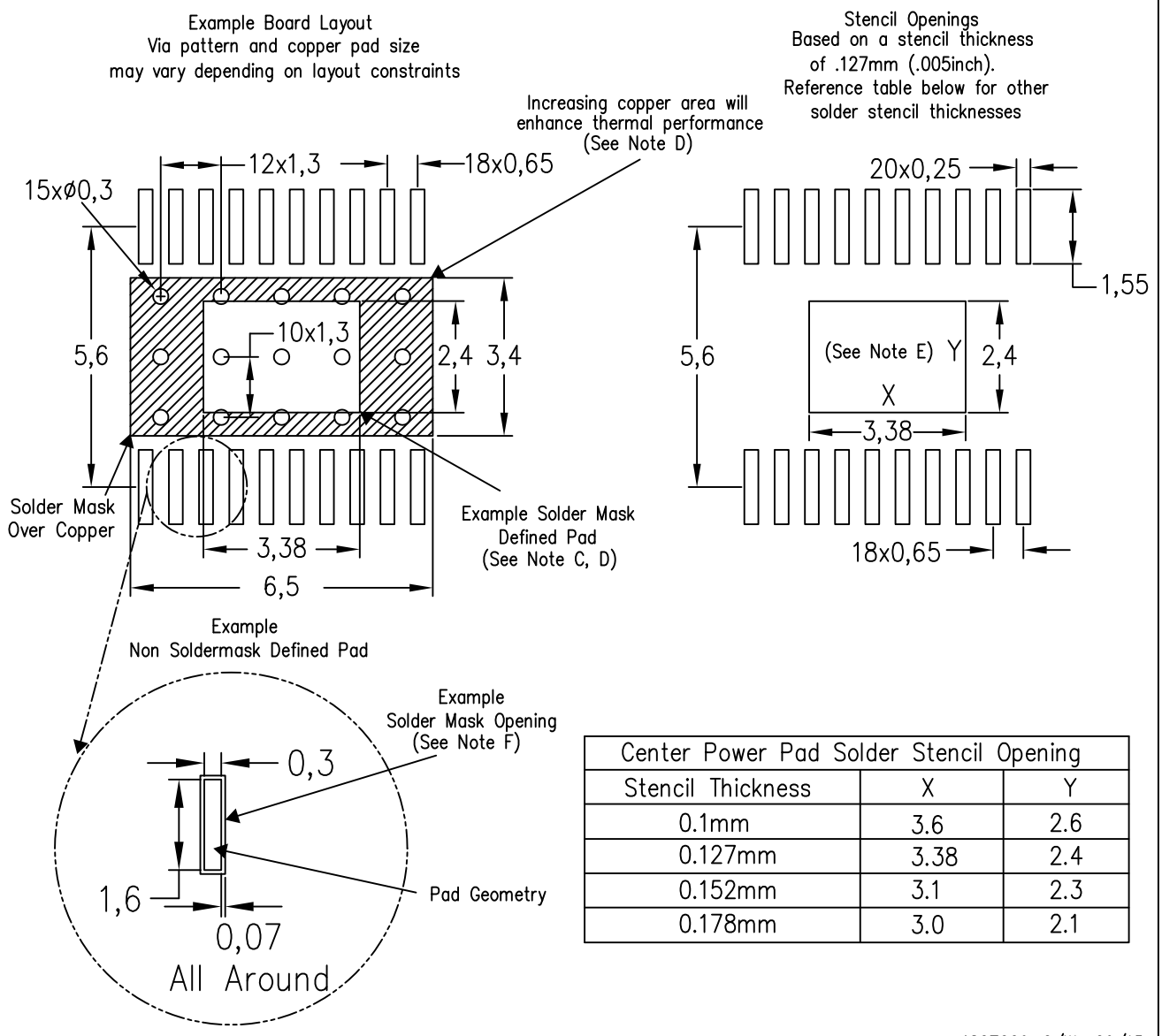

Center Power Pad Solder Stencil Opening		
Stencil Thickness	X	Y
0.1mm	3.6	2.6
0.127mm	3.38	2.4
0.152mm	3.1	2.3
0.178mm	3.0	2.1

4207609–6/W 09/15

NOTES:
A. All linear dimensions are in millimeters.
B. This drawing is subject to change without notice.
C. Customers should place a note on the circuit board fabrication drawing not to alter the center solder mask defined pad.
D. This package is designed to be soldered to a thermal pad on the board. Refer to Technical Brief, PowerPad Thermally Enhanced Package, Texas Instruments Literature No. SLMA002, SLMA004, and also the Product Data Sheets for specific thermal information, via requirements, and recommended board layout. These documents are available at www.ti.com <http://www.ti.com>. Publication IPC–7351 is recommended for alternate designs.
E. Laser cutting apertures with trapezoidal walls and also rounding corners will offer better paste release. Customers should contact their board assembly site for stencil design recommendations. Example stencil design based on a 50% volumetric metal load solder paste. Refer to IPC–7525 for other stencil recommendations.
F. Customers should contact their board fabrication site for solder mask tolerances between and around signal pads.

IMPORTANT NOTICE AND DISCLAIMER

TI PROVIDES TECHNICAL AND RELIABILITY DATA (INCLUDING DATASHEETS), DESIGN RESOURCES (INCLUDING REFERENCE DESIGNS), APPLICATION OR OTHER DESIGN ADVICE, WEB TOOLS, SAFETY INFORMATION, AND OTHER RESOURCES “AS IS” AND WITH ALL FAULTS, AND DISCLAIMS ALL WARRANTIES, EXPRESS AND IMPLIED, INCLUDING WITHOUT LIMITATION ANY IMPLIED WARRANTIES OF MERCHANTABILITY, FITNESS FOR A PARTICULAR PURPOSE OR NON-INFRINGEMENT OF THIRD PARTY INTELLECTUAL PROPERTY RIGHTS.

These resources are intended for skilled developers designing with TI products. You are solely responsible for (1) selecting the appropriate TI products for your application, (2) designing, validating and testing your application, and (3) ensuring your application meets applicable standards, and any other safety, security, regulatory or other requirements.

These resources are subject to change without notice. TI grants you permission to use these resources only for development of an application that uses the TI products described in the resource. Other reproduction and display of these resources is prohibited. No license is granted to any other TI intellectual property right or to any third party intellectual property right. TI disclaims responsibility for, and you fully indemnify TI and its representatives against any claims, damages, costs, losses, and liabilities arising out of your use of these resources.

TI’s products are provided subject to TI’s Terms of Sale, TI’s General Quality Guidelines, or other applicable terms available either on ti.com or provided in conjunction with such TI products. TI’s provision of these resources does not expand or otherwise alter TI’s applicable warranties or warranty disclaimers for TI products. Unless TI explicitly designates a product as custom or customer-specified, TI products are standard, catalog, general purpose devices.

TI objects to and rejects any additional or different terms you may propose.

Copyright © 2025, Texas Instruments Incorporated

Last updated 10/2025

ENTEGRECİ

Bu belge www.entegreci.com üzerinden sunulmaktadır.

Elektronik komponent tedarikinde Entegreci

Entegreci, Eskişehir merkezli, Türkiye geneline satış yapan bir elektronik komponent mağazasıdır. Entegreler (IC), mikrodenetleyiciler, transistörler, diyotlar, pasif elemanlar, konnektörler, modüller ve geliştirme kartları tek adetten seri üretim adetlerine kadar satılır. Ürün sayfalarında güncel stok durumunu, fiyatı ve datasheet bağlantısını bulabilirsiniz.

Parça koduyla arama

Üretici parça numarasını yazın; stok ve fiyatı hemen görün.

www.entegreci.com

Ürün kategorileri

Entegreden kapasitöre tüm elektronik komponent kategorileri.

Kategorilere göz atın

Üreticiler

Aradığınız üreticinin ürünlerini tek sayfada inceleyin.

Üreticileri görün

Toplu alım ve teklif

Listede olmayan ya da yüksek adetli parçalar için teklif isteyin.

Teklif isteyin

www.entegreci.com | **destek@entegreci.com** | **0850 305 90 34**

Entegreci is an online electronic components store based in Türkiye. Search by manufacturer part number to see stock, prices and datasheets for integrated circuits, microcontrollers, transistors, passive components and connectors, or request a quote for parts that are not listed.

Bu sayfa Entegreci tarafından eklenmiştir. Belgenin önceki sayfaları asıl yayıncısına aittir ve içeriği değiştirilmemiştir; en güncel sürüm için belgenin yayıncısına başvurun.