FEATURES

- **±1% Output Tolerance at 25°C**
- **±2% Output Tolerance Over Full Operating Range**
- **Thermal Shutdown**
- **Internal Short-Circuit Current Limiting**
- **Pinout Identical to μA7800 Series**
- **Improved Version of μA7800 Series**

KC (TO-220) PACKAGE
(TOP VIEW)

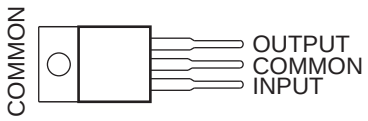

KCS (TO-220) PACKAGE
(TOP VIEW)

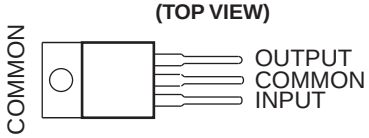

KTE PACKAGE
(TOP VIEW)

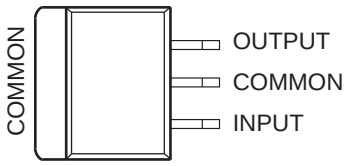

KTT (TO-263) PACKAGE
(TOP VIEW)

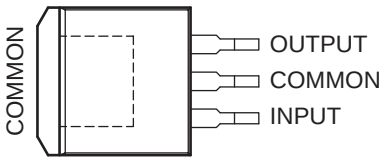

DESCRIPTION/ORDERING INFORMATION

Each fixed-voltage precision regulator in the TL780 series is capable of supplying 1.5 A of load current. A unique temperature-compensation technique, coupled with an internally trimmed band-gap reference, has resulted in improved accuracy when compared to other three-terminal regulators. Advanced layout techniques provide excellent line, load, and thermal regulation. The internal current-limiting and thermal-shutdown features essentially make the devices immune to overload.

ORDERING INFORMATION

T_J	V_O TYP (V)	PACKAGE(1)		ORDERABLE PART NUMBER	TOP-SIDE MARKING
0°C to 125°C	5	PowerFLEX™ – KTE	Reel of 2000	TL780-05CKTER	TL780-05C
		TO-220 – KC	Tube of 50	TL780-05CKC	TL780-05C
		TO-220, short shoulder – KCS	Tube of 20	TL780-05KCS	TL780-05
		TO-263 – KTT	Reel of 500	TL780-05CKTTR	TL780-05C
	12	TO-220 – KC	Tube of 50	TL780-12CKC	TL780-12C
		TO-220, short shoulder – KCS	Tube of 20	TL780-12KCS	TL780-12
	15	TO-220 – KC	Tube of 50	TL780-15CKC	TL780-15C
		TO-220, short shoulder – KCS	Tube of 20	TL780-15KCS	TL780-15

(1) Package drawings, standard packing quantities, thermal data, symbolization, and PCB design guidelines are available at www.ti.com/sc/package.

Please be aware that an important notice concerning availability, standard warranty, and use in critical applications of Texas Instruments semiconductor products and disclaimers thereto appears at the end of this data sheet.

PowerFLEX, PowerPAD are trademarks of Texas Instruments.

PRODUCTION DATA information is current as of publication date. Products conform to specifications per the terms of the Texas Instruments standard warranty. Production processing does not necessarily include testing of all parameters.

Copyright © 1981–2006, Texas Instruments Incorporated

SCHEMATIC

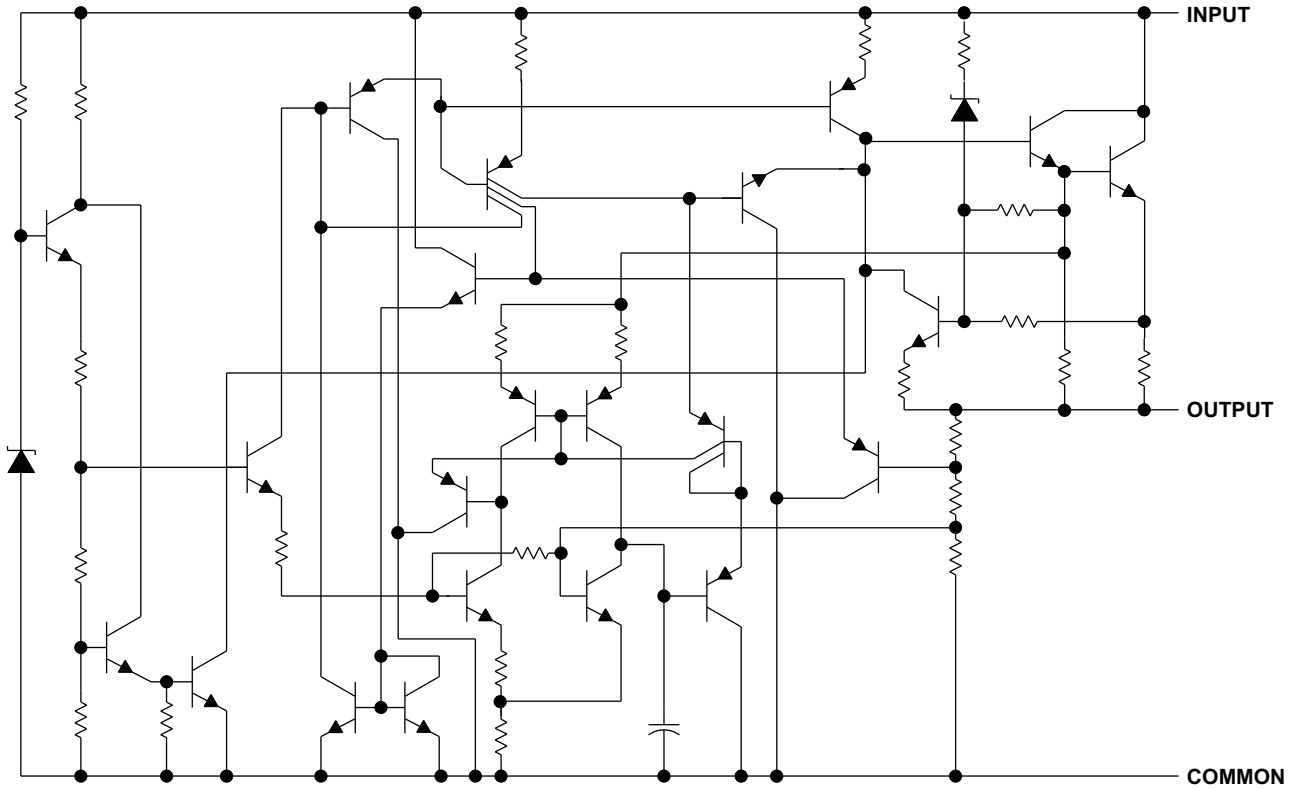

Absolute Maximum Ratings(1)

over operating temperature ranges (unless otherwise noted)

		MIN	MAX	UNIT
V_I	Input voltage		35	V
T_J	Operating virtual junction temperature		150	°C
	Lead temperature 1,6 mm (1/16 in) from case for 10 s		260	°C
T_{stg}	Storage temperature range	–65	150	°C

(1) Stresses beyond those listed under "absolute maximum ratings" may cause permanent damage to the device. These are stress ratings only, and functional operation of the device at these or any other conditions beyond those indicated under "recommended operating conditions" is not implied. Exposure to absolute-maximum-rated conditions for extended periods may affect device reliability.

Package Thermal Data(1)

PACKAGE	BOARD	θ_{JP}(2)	θ_{JC}	θ_{JA}
PowerFLEX (KTE)	High K, JESD 51-5	2.7°C/W	11.6°C/W	23.3°C/W
TO-220 (KC/KCS)	High K, JESD 51-5	3°C/W	17°C/W	19°C/W
TO-263 (KTT)	High K, JESD 51-5	1.91°C/W	18°C/W	25.3°C/W

(1) Maximum power dissipation is a function of $T_J(max)$, θ_{JA}, and T_A. The maximum allowable power dissipation at any allowable ambient temperature is $P_D = (T_J(max) – T_A)/\theta_{JA}$. Operating at the absolute maximum T_J of 150°C can affect reliability. Due to variations in individual device electrical characteristics and thermal resistance, the built-in thermal overload protection may be activated at power levels slightly above or below the rated dissipation.
(2) For packages with exposed thermal pads, such as QFN, PowerPAD™, or PowerFLEX, θ_{JP} is defined as the thermal resistance between the die junction and the bottom of the exposed pad.

Recommended Operating Conditions

			MIN	MAX	UNIT
V_I	Input voltage	TL780-05C	7	25	V
		TL780-12C	14.5	30	
		TL780-15C	17.5	30	
I_O	Output current			1.5	A
T_J	Operating virtual junction temperature		0	125	°C

Electrical Characteristics

at specified virtual junction temperature, V_I = 10 V, I_O = 500 mA (unless otherwise noted)

PARAMETER	TEST CONDITIONS	T_J (1)	TL780-05C			UNIT
			MIN	TYP	MAX	
Output voltage	I_O = 5 mA to 1 A, P ≤ 15 W, V_I = 7 V to 20 V	25°C	4.95	5	5.05	V
		0°C to 125°C	4.9		5.1	
Input voltage regulation	V_I = 7 V to 25 V	25°C		0.5	5	mV
	V_I = 8 V to 12 V			0.5	5	
Ripple rejection	V_I = 8 V to 18 V, f = 120 Hz	0°C to 125°C	70	85		dB
Output voltage regulation	I_O = 5 mA to 1.5 A	25°C		4	25	mV
	I_O = 250 mA to 750 mA			1.5	15	
Output resistance	f = 1 kHz	0°C to 125°C		0.0035		Ω
Temperature coefficient of output voltage	I_O = 5 mA	0°C to 125°C		0.25		mV/°C
Output noise voltage	f = 10 Hz to 100 kHz	25°C		75		μV
Dropout voltage	I_O = 1 A	25°C		2		V
Input bias current		25°C		5	8	mA
Input bias-current change	V_I = 7 V to 25 V	0°C to 125°C		0.7	1.3	mA
	I_O = 5 mA to 1 A			0.003	0.5	
Short-circuit output current		25°C		750		mA
Peak output current		25°C		2.2		A

(1) Pulse-testing techniques maintain the junction temperature as close to the ambient temperature as possible. Thermal effects must be taken into account separately. All characteristics are measured with a 0.33-μF capacitor across the input and a 0.22-μF capacitor across the output.

Electrical Characteristics

at specified virtual junction temperature, V_I = 19 V, I_O = 500 mA (unless otherwise noted)

PARAMETER	TEST CONDITIONS	T_J(1)	TL780-12C			UNIT
			MIN	TYP	MAX	
Output voltage	I_O = 5 mA to 1 A, P ≤ 15 W, V_I = 14.5 V to 27 V	25°C	11.88	12	12.12	V
		0°C to 125°C	11.76		12.24	
Input voltage regulation	V_I = 14.5 V to 30 V	25°C		1.2	12	mV
	V_I = 16 V to 22 V			1.2	12	
Ripple rejection	V_I = 15 V to 25 V, f = 120 Hz	0°C to 125°C	65	80		dB
Output voltage regulation	I_O = 5 mA to 1.5 A	25°C		6.5	60	mV
	I_O = 250 mA to 750 mA			2.5	36	
Output resistance	f = 1 kHz	0°C to 125°C		0.0035		Ω
Temperature coefficient of output voltage	I_O = 5 mA	0°C to 125°C		0.6		mV/°C
Output noise voltage	f = 10 Hz to 100 kHz	25°C		180		μV
Dropout voltage	I_O = 1 A	25°C		2		V
Input bias current		25°C		5.5	8	mA
Input bias-current change	V_I = 14.5 V to 30 V	0°C to 125°C		0.4	1.3	mA
	I_O = 5 mA to 1 A			0.03	0.5	
Short-circuit output current		25°C		350		mA
Peak output current		25°C		2.2		A

(1) Pulse-testing techniques maintain the junction temperature as close to the ambient temperature as possible. Thermal effects must be taken into account separately. All characteristics are measured with a 0.33-μF capacitor across the input and a 0.22-μF capacitor across the output.

Electrical Characteristics

at specified virtual junction temperature, V_I = 23 V, I_O = 500 mA (unless otherwise noted)

PARAMETER	TEST CONDITIONS	T_J(1)	TL780-15C			UNIT
			MIN	TYP	MAX	
Output voltage	I_O = 5 mA to 1 A, P ≤ 15 W, V_I = 17.5 V to 30 V	25°C	14.85	15	15.15	V
		0°C to 125°C	14.7		15.3	
Input voltage regulation	V_I = 17.5 V to 30 V	25°C		1.5	15	mV
	V_I = 20 V to 26 V			1.5	15	
Ripple rejection	V_I = 18.5 V to 28.5 V, f = 120 Hz	0°C to 125°C	60	75		dB
Output voltage regulation	I_O = 5 mA to 1.5 A	25°C		7	75	mV
	I_O = 250 mA to 750 mA			2.5	45	
Output resistance	f = 1 kHz	0°C to 125°C		0.0035		Ω
Temperature coefficient of output voltage	I_O = 5 mA	0°C to 125°C		0.62		mV/°C
Output noise voltage	f = 10 Hz to 100 kHz	25°C		225		μV
Dropout voltage	I_O = 1 A	25°C		2		V
Input bias current		25°C		5.5	8	mA
Input bias-current change	V_I = 17.5 V to 30 V	0°C to 125°C		0.4	1.3	mA
	I_O = 5 mA to 1 A			0.02	0.5	
Short-circuit output current		25°C		230		mA
Peak output current		25°C		2.2		A

(1) Pulse-testing techniques maintain the junction temperature as close to the ambient temperature as possible. Thermal effects must be taken into account separately. All characteristics are measured with a 0.33-μF capacitor across the input and a 0.22-μF capacitor across the output.

PARAMETER MEASUREMENT INFORMATION

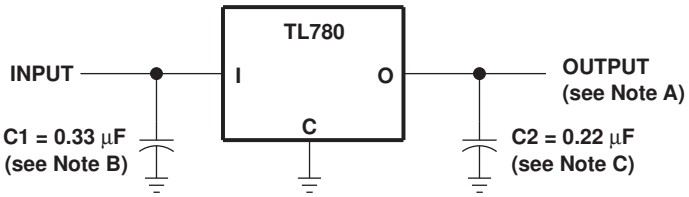

A. Permanent damage can occur when OUTPUT is pulled below ground.

B. C1 is required when the regulator is far from the power-supply filter.

C. C2 is not required for stability; however, transient response is improved.

Figure 1. Test Circuit

APPLICATION INFORMATION

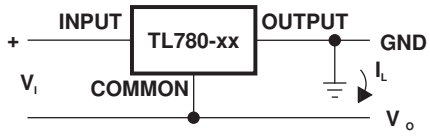

Figure 2. Positive Regulator in Negative Configuration (V_I Must Float)

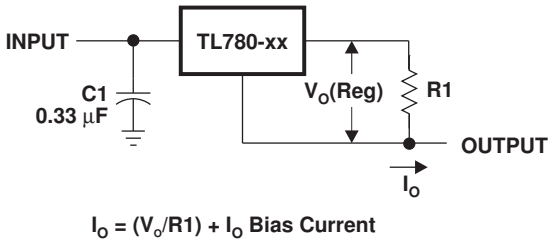

Figure 3. Current Regulator

Operation With a Load Common to a Voltage of Opposite Polarity

In many cases, a regulator powers a load that is not connected to ground, but instead, is connected to a voltage source of opposite polarity (e.g., operational amplifiers, level-shifting circuits, etc.). In these cases, a clamp diode should be connected to the regulator output as shown in Figure 4. This protects the regulator from output polarity reversals during startup and short-circuit operation.

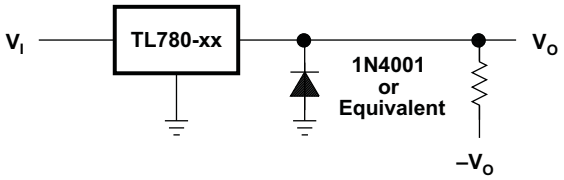

Figure 4. Output Polarity-Reversal-Protection Circuit

Reverse-Bias Protection

Occasionally, the input voltage to the regulator can collapse faster than the output voltage. This, for example, could occur when the input supply is crowbarred during an output overvoltage condition. If the output voltage is greater than approximately 7 V, the emitter-base junction of the series pass element (internal or external) could break down and be damaged. To prevent this, a diode shunt can be employed, as shown in Figure 5.

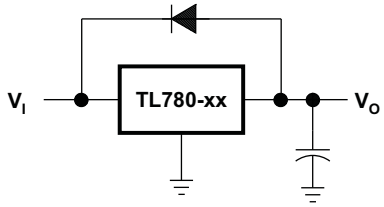

Figure 5. Reverse-Bias-Protection Circuit

PACKAGING INFORMATION

Orderable part number	Status (1)	Material type (2)	Package | Pins	Package qty | Carrier	RoHS (3)	Lead finish/ Ball material (4)	MSL rating/ Peak reflow (5)	Op temp (°C)	Part marking (6)
TL780-05CKTTR	Active	Production	DDPAK/ TO-263 (KTT) | 3	500 | LARGE T&R	Yes	SN	Level-3-245C-168 HR	0 to 125	TL780-05C
TL780-05CKTTR.A	Active	Production	DDPAK/ TO-263 (KTT) | 3	500 | LARGE T&R	Yes	SN	Level-3-245C-168 HR	0 to 125	TL780-05C
TL780-05CKTTRG3	Active	Production	DDPAK/ TO-263 (KTT) | 3	500 | LARGE T&R	Yes	SN	Level-3-245C-168 HR	0 to 125	TL780-05C
TL780-05KCS	Active	Production	TO-220 (KCS) | 3	50 | TUBE	Yes	SN	N/A for Pkg Type	0 to 125	TL780-05
TL780-05KCS.A	Active	Production	TO-220 (KCS) | 3	50 | TUBE	Yes	SN	N/A for Pkg Type	0 to 125	TL780-05
TL780-05KCSE3	Active	Production	TO-220 (KCS) | 3	50 | TUBE	Yes	SN	N/A for Pkg Type	0 to 125	TL780-05
TL780-12KCS	Active	Production	TO-220 (KCS) | 3	50 | TUBE	Yes	SN	N/A for Pkg Type	0 to 125	TL780-12
TL780-12KCS.A	Active	Production	TO-220 (KCS) | 3	50 | TUBE	Yes	SN	N/A for Pkg Type	0 to 125	TL780-12
TL780-15KCS	Active	Production	TO-220 (KCS) | 3	50 | TUBE	Yes	SN	N/A for Pkg Type	0 to 125	TL780-15
TL780-15KCS.A	Active	Production	TO-220 (KCS) | 3	50 | TUBE	Yes	SN	N/A for Pkg Type	0 to 125	TL780-15
TL780-15KCSE3	Active	Production	TO-220 (KCS) | 3	50 | TUBE	Yes	SN	N/A for Pkg Type	0 to 125	TL780-15

(1) **Status:** For more details on status, see our product life cycle.

(2) **Material type:** When designated, preproduction parts are prototypes/experimental devices, and are not yet approved or released for full production. Testing and final process, including without limitation quality assurance, reliability performance testing, and/or process qualification, may not yet be complete, and this item is subject to further changes or possible discontinuation. If available for ordering, purchases will be subject to an additional waiver at checkout, and are intended for early internal evaluation purposes only. These items are sold without warranties of any kind.

(3) **RoHS values:** Yes, No, RoHS Exempt. See the TI RoHS Statement for additional information and value definition.

(4) **Lead finish/Ball material:** Parts may have multiple material finish options. Finish options are separated by a vertical ruled line. Lead finish/Ball material values may wrap to two lines if the finish value exceeds the maximum column width.

(5) **MSL rating/Peak reflow:** The moisture sensitivity level ratings and peak solder (reflow) temperatures. In the event that a part has multiple moisture sensitivity ratings, only the lowest level per JEDEC standards is shown. Refer to the shipping label for the actual reflow temperature that will be used to mount the part to the printed circuit board.

(6) **Part marking:** There may be an additional marking, which relates to the logo, the lot trace code information, or the environmental category of the part.

Multiple part markings will be inside parentheses. Only one part marking contained in parentheses and separated by a "~" will appear on a part. If a line is indented then it is a continuation of the previous line and the two combined represent the entire part marking for that device.

Important Information and Disclaimer: The information provided on this page represents TI's knowledge and belief as of the date that it is provided. TI bases its knowledge and belief on information provided by third parties, and makes no representation or warranty as to the accuracy of such information. Efforts are underway to better integrate information from third parties. TI has taken and continues to take reasonable steps to provide representative and accurate information but may not have conducted destructive testing or chemical analysis on incoming materials and chemicals. TI and TI suppliers consider certain information to be proprietary, and thus CAS numbers and other limited information may not be available for release.

In no event shall TI's liability arising out of such information exceed the total purchase price of the TI part(s) at issue in this document sold by TI to Customer on an annual basis.

TAPE AND REEL INFORMATION

REEL DIMENSIONS

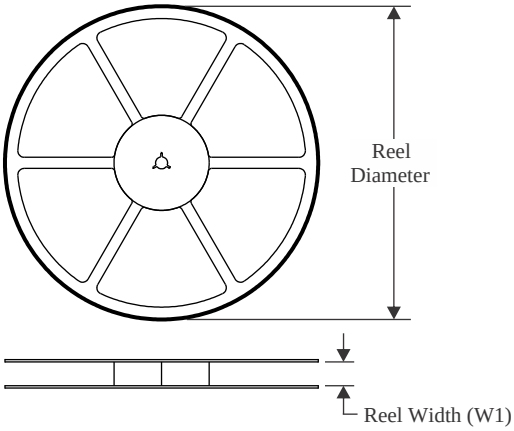

TAPE DIMENSIONS

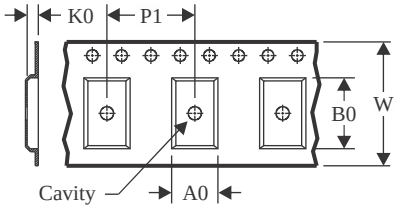

A0	Dimension designed to accommodate the component width
B0	Dimension designed to accommodate the component length
K0	Dimension designed to accommodate the component thickness
W	Overall width of the carrier tape
P1	Pitch between successive cavity centers

QUADRANT ASSIGNMENTS FOR PIN 1 ORIENTATION IN TAPE

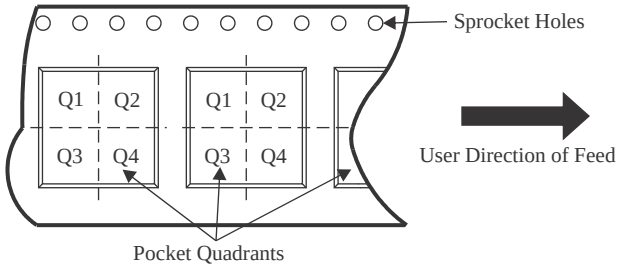

*All dimensions are nominal

Device	Package Type	Package Drawing	Pins	SPQ	Reel Diameter (mm)	Reel Width W1 (mm)	A0 (mm)	B0 (mm)	K0 (mm)	P1 (mm)	W (mm)	Pin1 Quadrant
TL780-05CKTTR	DDPAK/ TO-263	KTT	3	500	330.0	24.4	10.8	16.3	5.11	16.0	24.0	Q2

TAPE AND REEL BOX DIMENSIONS

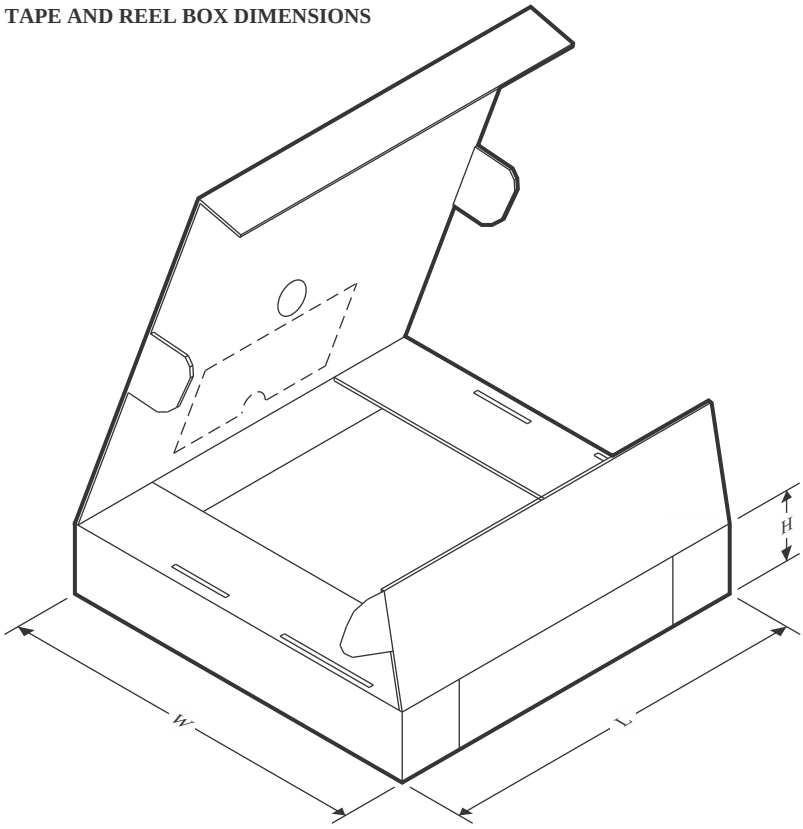

*All dimensions are nominal

Device	Package Type	Package Drawing	Pins	SPQ	Length (mm)	Width (mm)	Height (mm)
TL780-05CKTTR	DDPAK/TO-263	KTT	3	500	340.0	340.0	38.0

TUBE

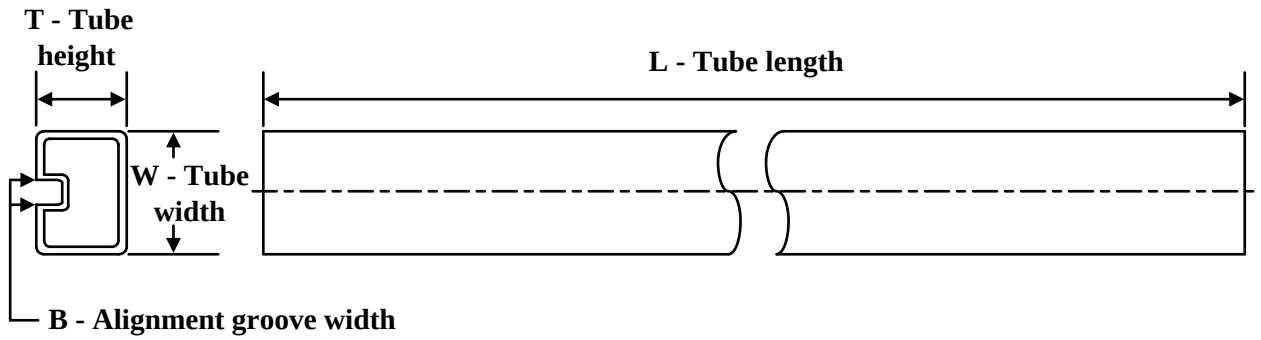

*All dimensions are nominal

Device	Package Name	Package Type	Pins	SPQ	L (mm)	W (mm)	T (µm)	B (mm)
TL780-05KCS	KCS	TO-220	3	50	532	34.1	700	9.6
TL780-05KCS.A	KCS	TO-220	3	50	532	34.1	700	9.6
TL780-05KCSE3	KCS	TO-220	3	50	532	34.1	700	9.6
TL780-12KCS	KCS	TO-220	3	50	532	34.1	700	9.6
TL780-12KCS.A	KCS	TO-220	3	50	532	34.1	700	9.6
TL780-15KCS	KCS	TO-220	3	50	532	34.1	700	9.6
TL780-15KCS.A	KCS	TO-220	3	50	532	34.1	700	9.6
TL780-15KCSE3	KCS	TO-220	3	50	532	34.1	700	9.6

KTT (R–PSFM–G3) PLASTIC FLANGE–MOUNT PACKAGE

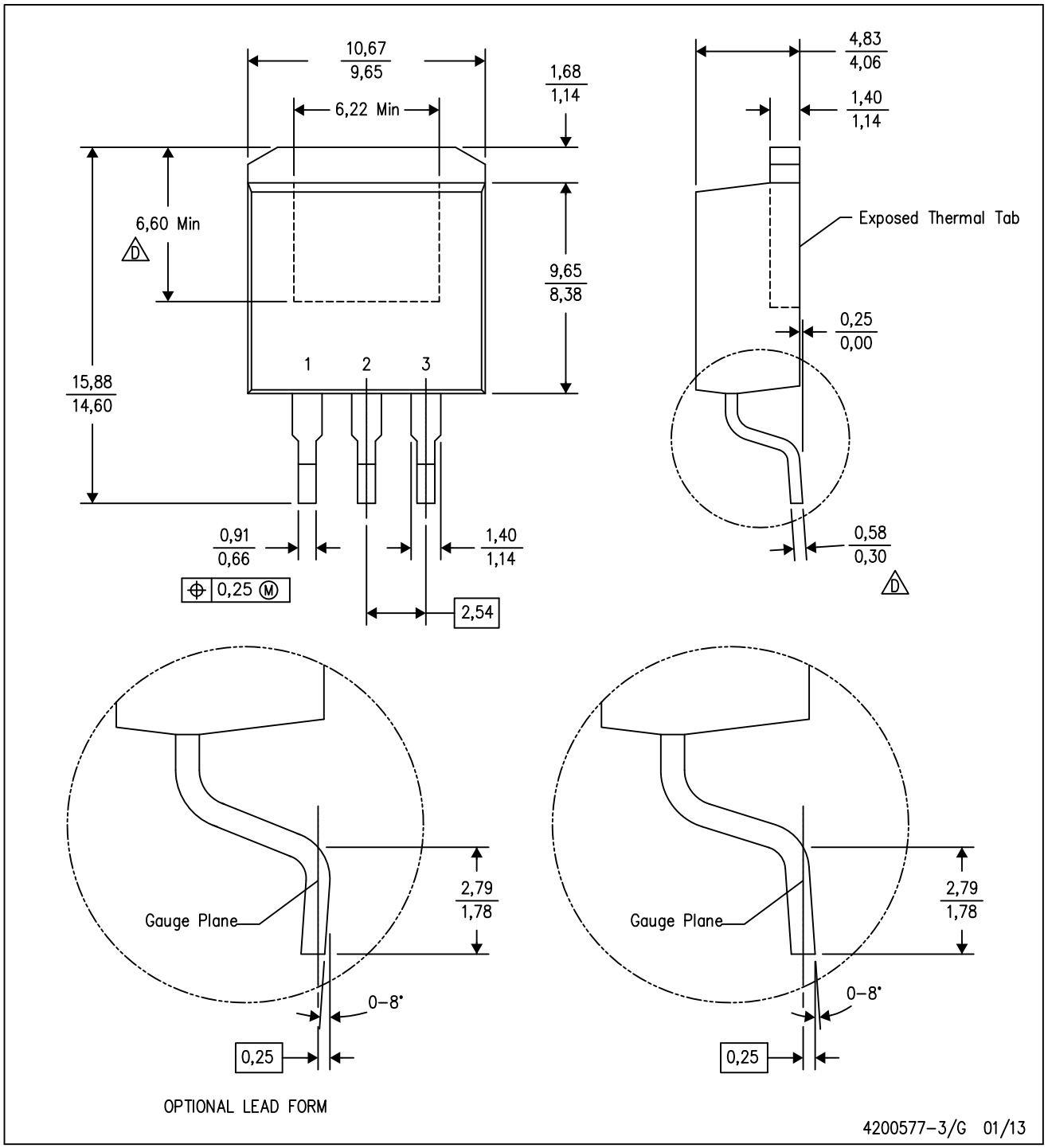

NOTES:
A. All linear dimensions are in millimeters.
B. This drawing is subject to change without notice.
C. Body dimensions do not include mold flash or protrusion. Mold flash or protrusion not to exceed 0.005 (0,13) per side.
D. Falls within JEDEC TO–263 variation AA, except minimum lead thickness and minimum exposed pad length.

KTT (R–PSFM–G3) PLASTIC FLANGE–MOUNT PACKAGE

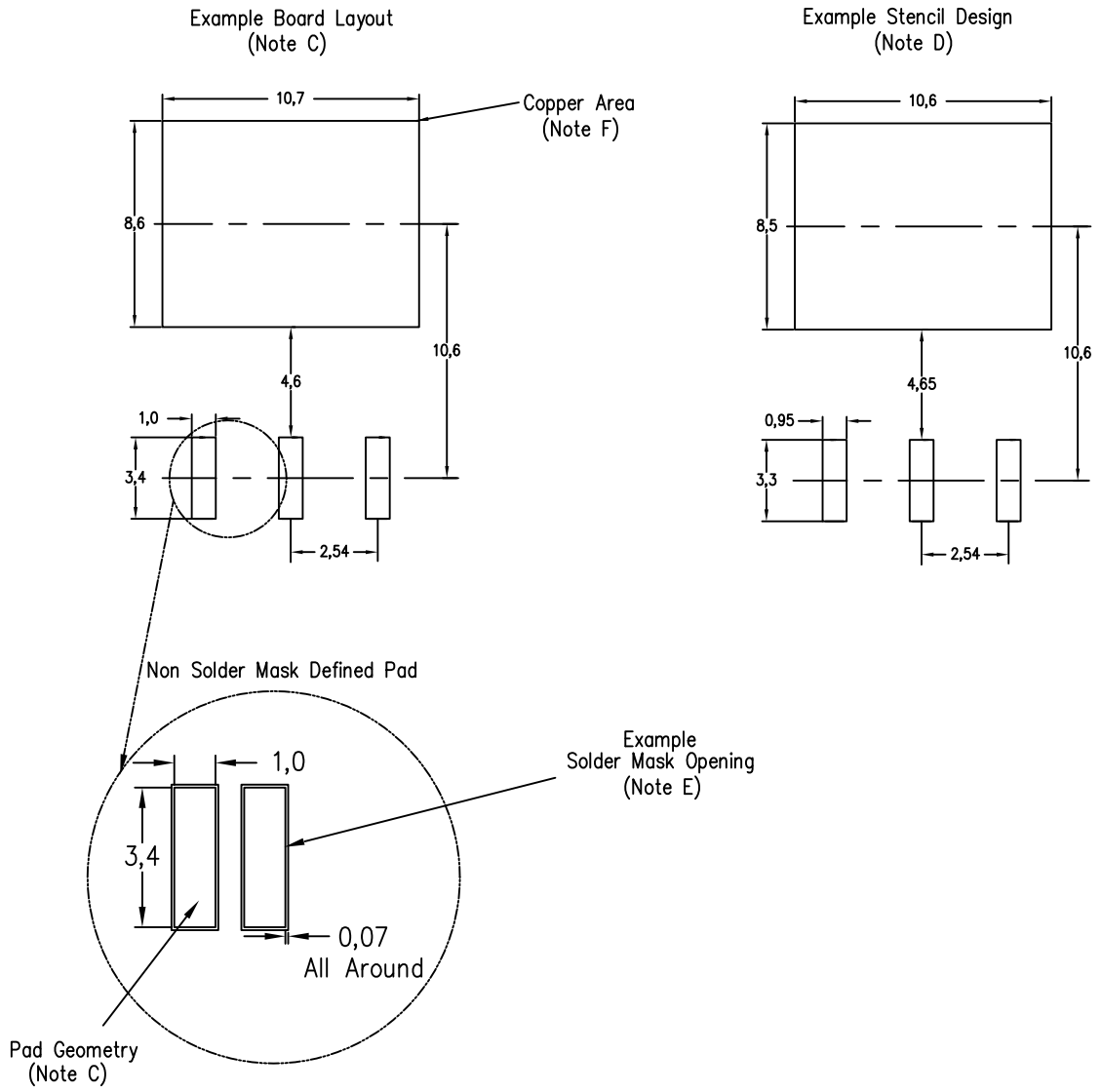

NOTES:
A. All linear dimensions are in millimeters.
B. This drawing is subject to change without notice.
C. Publication IPC–SM–782 is recommended for alternate designs.
D. Laser cutting apertures with trapezoidal walls and also rounding corners will offer better paste release. Customers should contact their board assembly site for stencil design recommendations. Refer to IPC–7525.
E. Customers should contact their board fabrication site for solder mask tolerances between and around signal pads.
F. This package is designed to be soldered to a thermal pad on the board. Refer to the Product Datasheet for specific thermal information, via requirements, and recommended thermal pad size. For thermal pad sizes larger than shown a solder mask defined pad is recommended in order to maintain the solderable pad geometry while increasing copper area.

KCS0003B

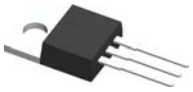

PACKAGE OUTLINE

TO-220 - 19.65 mm max height

TO-220

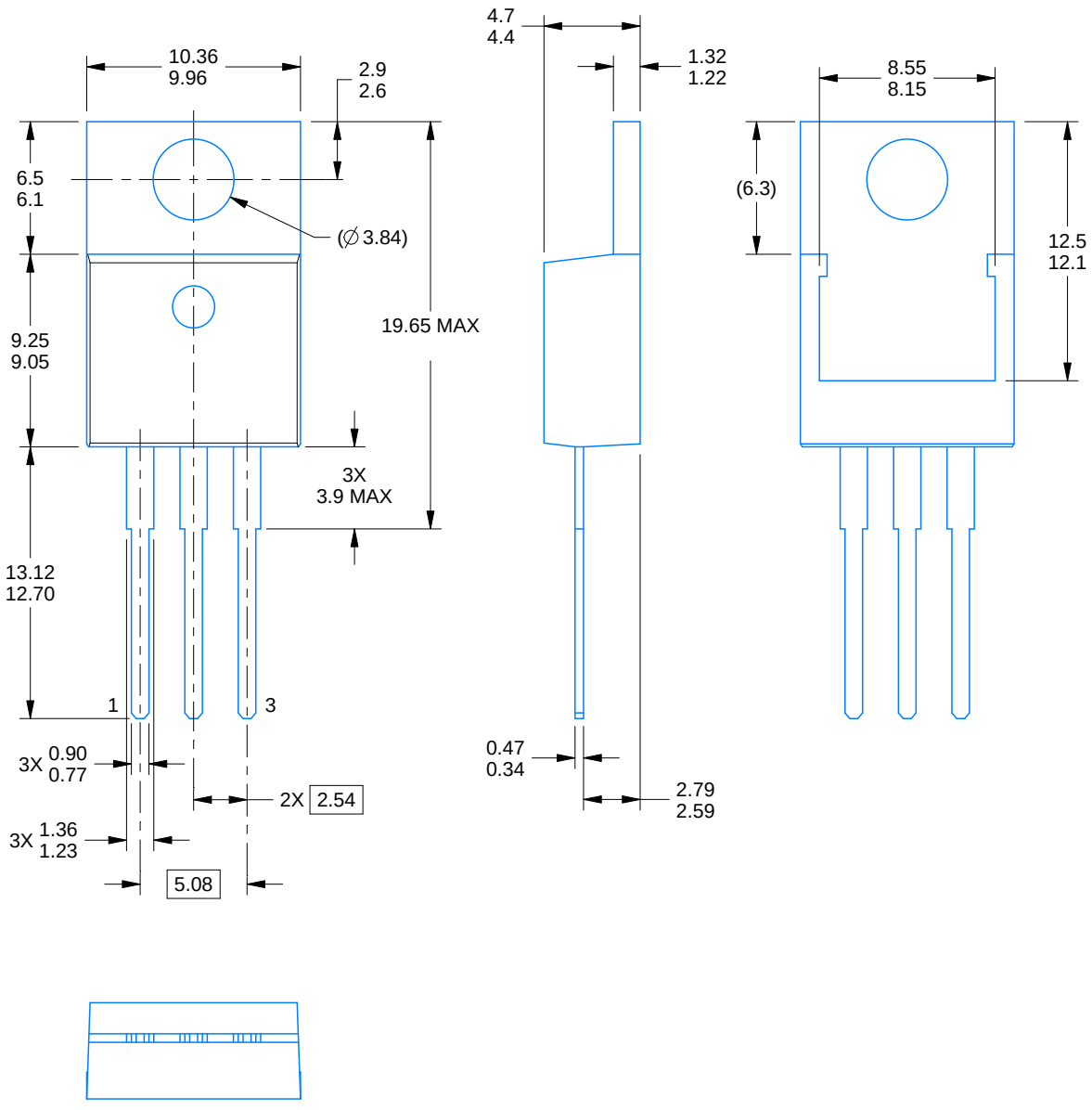

4222214/B 08/2018

NOTES:

1. Dimensions are in millimeters. Any dimension in brackets or parenthesis are for reference only. Dimensioning and tolerancing per ASME Y14.5M.
2. This drawing is subject to change without notice.
3. Reference JEDEC registration TO-220.

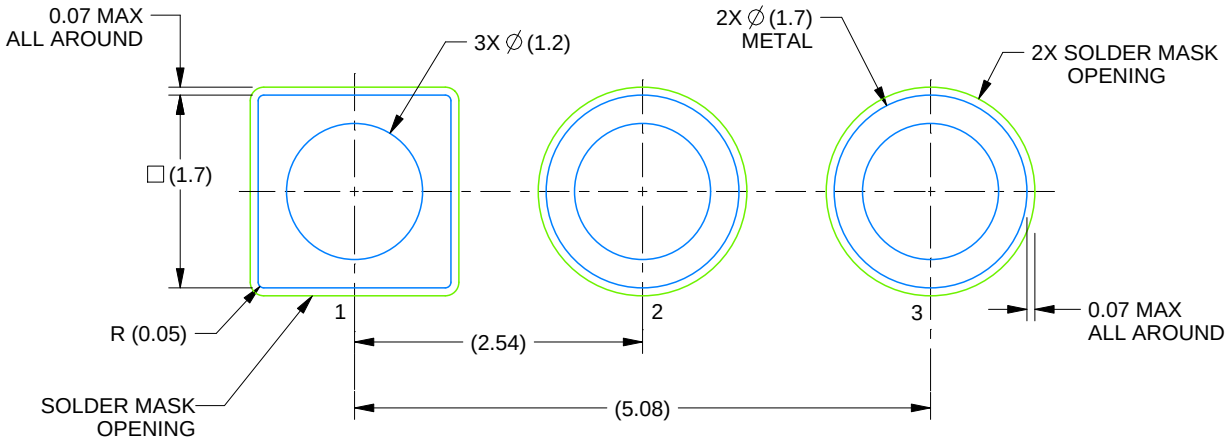

LAND PATTERN EXAMPLE
NON-SOLDER MASK DEFINED
SCALE:15X

4222214/B 08/2018

IMPORTANT NOTICE AND DISCLAIMER

TI PROVIDES TECHNICAL AND RELIABILITY DATA (INCLUDING DATASHEETS), DESIGN RESOURCES (INCLUDING REFERENCE DESIGNS), APPLICATION OR OTHER DESIGN ADVICE, WEB TOOLS, SAFETY INFORMATION, AND OTHER RESOURCES “AS IS” AND WITH ALL FAULTS, AND DISCLAIMS ALL WARRANTIES, EXPRESS AND IMPLIED, INCLUDING WITHOUT LIMITATION ANY IMPLIED WARRANTIES OF MERCHANTABILITY, FITNESS FOR A PARTICULAR PURPOSE OR NON-INFRINGEMENT OF THIRD PARTY INTELLECTUAL PROPERTY RIGHTS.

These resources are intended for skilled developers designing with TI products. You are solely responsible for (1) selecting the appropriate TI products for your application, (2) designing, validating and testing your application, and (3) ensuring your application meets applicable standards, and any other safety, security, regulatory or other requirements.

These resources are subject to change without notice. TI grants you permission to use these resources only for development of an application that uses the TI products described in the resource. Other reproduction and display of these resources is prohibited. No license is granted to any other TI intellectual property right or to any third party intellectual property right. TI disclaims responsibility for, and you fully indemnify TI and its representatives against any claims, damages, costs, losses, and liabilities arising out of your use of these resources.

TI’s products are provided subject to TI’s Terms of Sale, TI’s General Quality Guidelines, or other applicable terms available either on ti.com or provided in conjunction with such TI products. TI’s provision of these resources does not expand or otherwise alter TI’s applicable warranties or warranty disclaimers for TI products. Unless TI explicitly designates a product as custom or customer-specified, TI products are standard, catalog, general purpose devices.

TI objects to and rejects any additional or different terms you may propose.

Copyright © 2026, Texas Instruments Incorporated

Last updated 10/2025

ENTEGRECİ

Bu belge www.entegreci.com üzerinden sunulmaktadır.

Elektronik komponent tedarikinde Entegreci

Entegreci, Eskişehir merkezli, Türkiye geneline satış yapan bir elektronik komponent mağazasıdır. Entegreler (IC), mikrodenetleyiciler, transistörler, diyotlar, pasif elemanlar, konnektörler, modüller ve geliştirme kartları tek adetten seri üretim adetlerine kadar satılır. Ürün sayfalarında güncel stok durumunu, fiyatı ve datasheet bağlantısını bulabilirsiniz.

Parça koduyla arama

Üretici parça numarasını yazın; stok ve fiyatı hemen görün.

www.entegreci.com

Ürün kategorileri

Entegreden kapasitöre tüm elektronik komponent kategorileri.

Kategorilere göz atın

Üreticiler

Aradığınız üreticinin ürünlerini tek sayfada inceleyin.

Üreticileri görün

Toplu alım ve teklif

Listede olmayan ya da yüksek adetli parçalar için teklif isteyin.

Teklif isteyin

www.entegreci.com | **destek@entegreci.com** | **0850 305 90 34**

Entegreci is an online electronic components store based in Türkiye. Search by manufacturer part number to see stock, prices and datasheets for integrated circuits, microcontrollers, transistors, passive components and connectors, or request a quote for parts that are not listed.

Bu sayfa Entegreci tarafından eklenmiştir. Belgenin önceki sayfaları asıl yayıncısına aittir ve içeriği değiştirilmemiştir; en güncel sürüm için belgenin yayıncısına başvurun.