SPX1117

800mA Low Dropout Voltage Regulator

June 10, 2025 Rev. 2.2.0

GENERAL DESCRIPTION

The SPX1117 is a low power positive-voltage regulator designed to satisfy moderate power requirements with a cost effective, small footprint solution.

This device is an excellent choice for use in battery-powered applications and portable computers. The SPX1117 features very low quiescent current and a low dropout voltage of 1.1V at a full load. As output current decreases, quiescent current flows into the load, increasing efficiency. SPX1117 is available in adjustable or fixed 1.5V, 1.8V, 2.5V, 3.3V and 5V output voltages.

The SPX1117 is offered in a 3-pin SOT-223 surface mount packages.

An output capacitor of 10µF provides unconditional stability while a smaller 2.2µF capacitor is sufficient for most applications.

APPLICATIONS

- **Desktop PC Servers**
- **Graphic/Video Cards**
- **Industrial Equipments**
- **Power Supplies**

FEATURES

- **Guaranteed 800mA Output Current**
- **Guaranteed 1A Peak Current**
- **Three Terminal Adjustable or Fixed 1.5V, 1.8V, 2.5V, 3.3V and 5V**
- **Low Quiescent Current**
- **Low Dropout Voltage of 1.1V at 800mA**
- **0.1% Line and 0.2% Load Regulation**
- **Stable with 2.2µF Ceramic Capacitor**
- **Overcurrent and Thermal Protection**
- **Lead Free, RoHS Compliant SOT223 Package**

FUNCTIONAL DIAGRAM

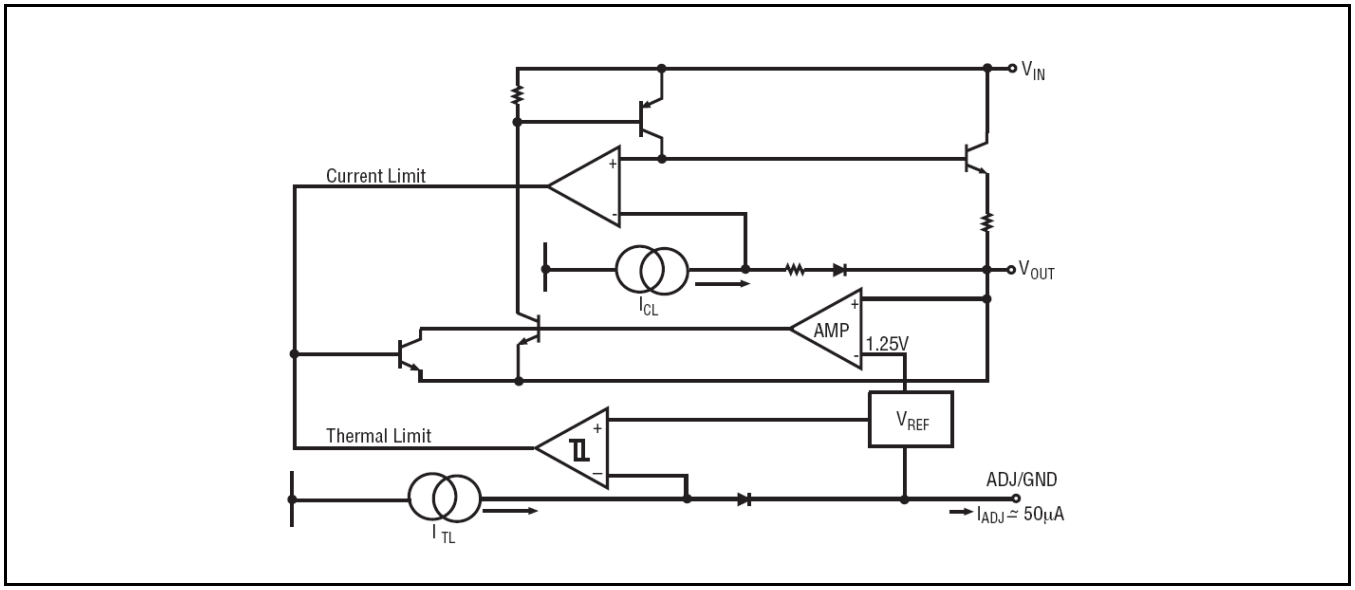

Fig. 1: SPX1117 Application Diagram

ABSOLUTE MAXIMUM RATINGS

These are stress ratings only and functional operation of the device at these ratings or any other above those indicated in the operation sections of the specifications below is not implied. Exposure to absolute maximum rating conditions for extended periods of time may affect reliability.

Power Dissipation ..... Internally Limited
Lead Temperature (Soldering, 5 sec) ..... 260°C
Storage Temperature ..... -65°C to 150°C
Operating Junction Temperature Range ... -40°C to +125°C
Input Supply Voltage 20V
Input to Output Voltage 18.8V
ESD Rating (HBM - Human Body Model) 2kV

ELECTRICAL SPECIFICATIONS

Specifications with standard type are for an Operating Ambient Temperature of T_A = 25°C only; limits applying over the full Operating Junction Temperature range are denoted by a "•". Minimum and Maximum limits are guaranteed through test, design, or statistical correlation. Typical values represent the most likely parametric norm at T_J = 25°C, and are provided for reference purposes only. Unless otherwise indicated, C_{IN} = C_{OUT} =10µF, T_A= 25°C.

Parameter	Min.	Typ.	Max.	Units		Conditions
1.5V Version						
Output Voltage	1.485	1.500	1.515	V		I_{OUT}=5mA, V_{IN}=3.0V, T_J=25°C
	1.470		1.530		•	5mA≤ I_{OUT} ≤800mA, 2.9V≤ V_{IN} ≤10V
1.8V Version						
Output Voltage	1.782	1.800	1.818	V		I_{OUT}=5mA, V_{IN}=3.3V, T_J=25°C
	1.764		1.836		•	5mA≤ I_{OUT} ≤800mA, 3.2V≤ V_{IN} ≤10V
2.5V Version						
Output Voltage	2.475	2.500	2.525	V		I_{OUT}=5mA, V_{IN}=4.0V, T_J=25°C
	2.450		2.550		•	5mA≤ I_{OUT} ≤800mA, 3.9V≤ V_{IN} ≤10V
3.3V Version						
Output Voltage	3.267	3.300	3.333	V		I_{OUT}=5mA, V_{IN}=4.8V, T_J=25°C
	3.234		3.366		•	
5.0V Version						
Output Voltage	4.950	5.000	5.050	V		I_{OUT}=5mA, V_{IN}=6.5V, T_J=25°C
	4.900		5.100		•	5mA≤ I_{OUT} ≤800mA, 6.4V≤ V_{IN} ≤12V
All Voltage Options						
Reference Voltage	1.238	1.250	1.262	V		I_{OUT}=5mA, (V_{IN} – V_{OUT})=2V, T_J=25°C
	1.225		1.270		•	5mA≤I_{OUT}≤800mA, 1.4V≤(V_{IN}–V_{OUT})≤10V
Output Voltage Temperature Stability		0.3		%		
Line Regulation (note 1)		3	7	mV		V_{INMIN}≤ V_{IN} ≤12V, V_{OUT} = Fixed/Adj., I_{OUT}=5mA
Load Regulation (note 1)		6	12	mV	•	5mA≤ I_{OUT} ≤800mA, V_{OUT} = Fixed/Adj.
Dropout Voltage (note 2)		1.00	1.20	V	•	I_{OUT}=100mA
		1.05	1.25		•	I_{OUT}=500mA
		1.10	1.30		•	I_{OUT}=800mA
Quiescent Current		5	10	mA	•	4.25V≤ V_{IN} ≤6.5V
Adjust Pin Current		50	120	µA	•	
Current Limit	1.0	1.5	2.0	A		(V_{IN} – V_{OUT})=5V
Thermal Regulation		0.01	0.1	%/W		25°C, 30ms pulse
Ripple Rejection	60	75		dB		f_{RIPPLE}=120Hz, (V_{IN} – V_{OUT})=2V, V_{RIPPLE}=1V_{PP}

Parameter	Min.	Typ.	Max.	Units		Conditions
Long Term Stability		0.03		%		125°C, 1000Hrs
RMS Output Noise		0.003		%		% of V_{OUT}, 10Hz≤f≤10kHz

Note 1:
For fixed voltage option $V_{INMIN}=V_{OUT}+1.5V$
For adjustable voltage option $V_{IN}-V_{OUT}=1.4V$
Note 2: Dropout voltage is the input voltage minus output voltage that produces a 1% decrease in output voltage with respect to the nominal output voltage at $V_{IN}=V_{OUT}+1.5V$

PIN ASSIGNMENT

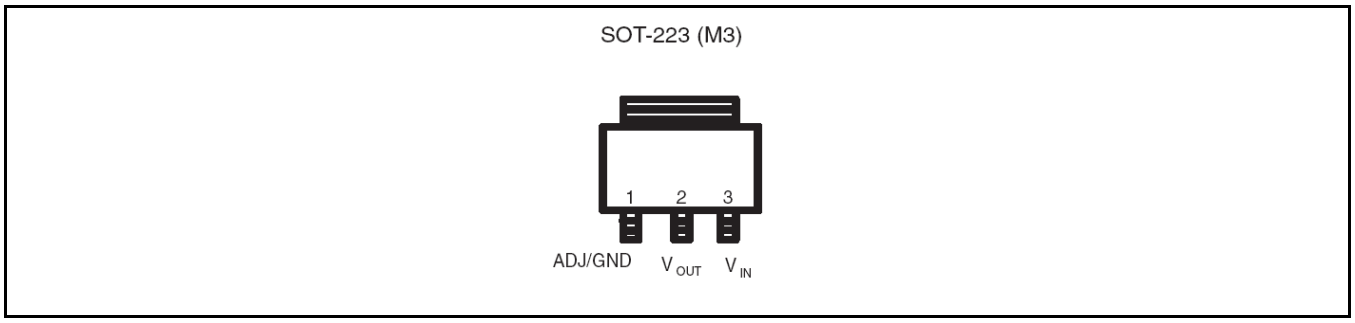

Fig. 2: SPX1117 Pin Assignment (Top View, TAB connected to V_{OUT})

ORDERING INFORMATION

Part Number	Operating Temperature Range	Lead-Free	Package	Packing Method	Output Voltage
SPX1117M3-L/TR	-40°C≤T_J≤+125°C	Yes	SOT223-3	Tape & Reel	Adjustable
SPX1117M3-L-1-5/TR					1.5V
SPX1117M3-L-1-8/TR					1.8V
SPX1117M3-L-2-5/TR					2.5V
SPX1117M3-L-3-3/TR					3.3V
SPX1117M3-L-5-0/TR					5.0V

NOTE: For more information about part numbers, as well as the most up-to-date ordering information and additional information on environment rating, go to www.maxlinear.com/SPX1117.

TYPICAL PERFORMANCE CHARACTERISTICS

All data taken at T_A = 25°C, unless otherwise specified - Schematic and BOM from Application Information section of this datasheet.

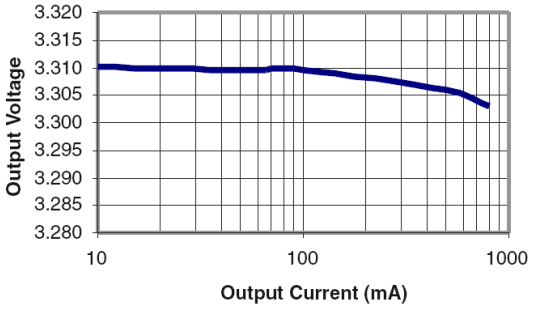

Fig. 3: Load Regulation
SPX1117M3-L-3-3, V_{IN}=4.8V

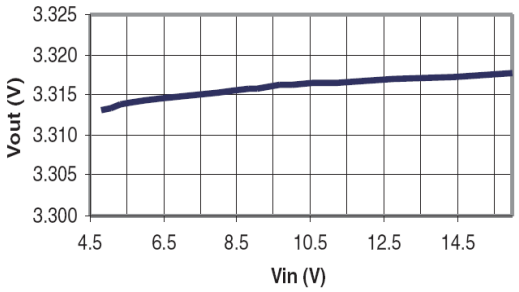

Fig. 4: Line Regulation
SPX1117M3-L-3-3, I_{OUT}=10mA

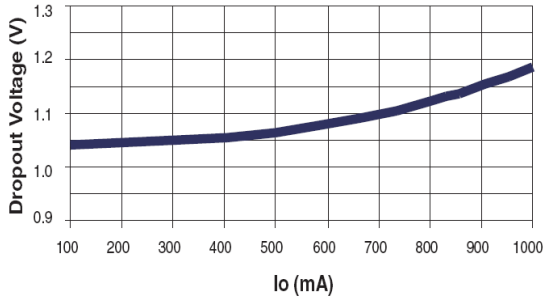

Fig. 5: Dropout Voltage vs Output Current
SPX1117M3-L-3-3, V_{IN}=4.8V, C_{OUT}=2.2µF

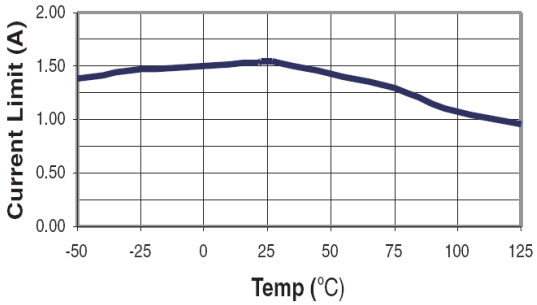

Fig. 6: Current Limit
I_{OUT} pulsed from 10mA to Current limit
SPX1117M3-L-3-3, V_{IN}=4.8V, C_{IN}=C_{OUT}=2.2µF

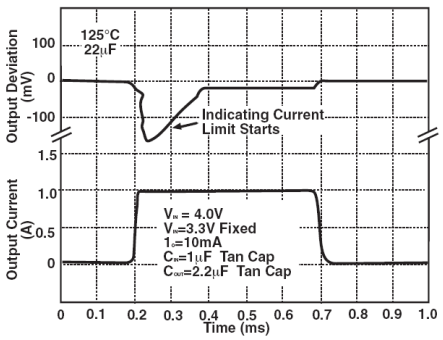

Fig. 7: Current Limit
Output Voltage Deviation
SPX1117M3-L-3-3, I_{OUT}=10mA to 1A Step

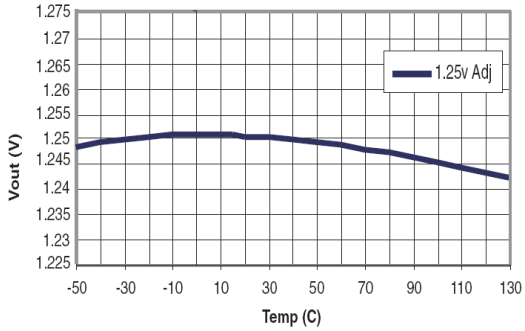

Fig. 8: V_{OUT} vs Temperature
V_{IN}=2.5V, I_{OUT}=10mA

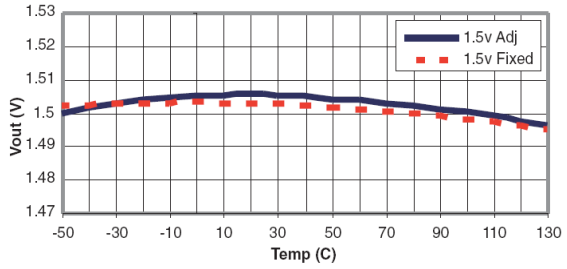

Fig. 9: V_{IN}=3.0V, I_{OUT}=10mA

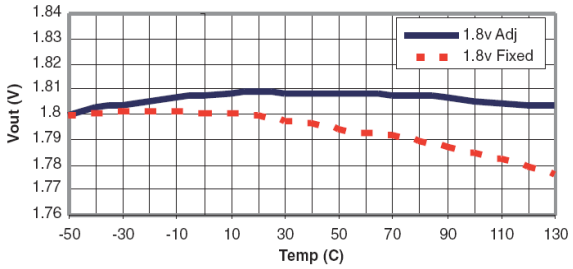

Fig. 10: V_{IN}=3.3V, I_{OUT}=10mA

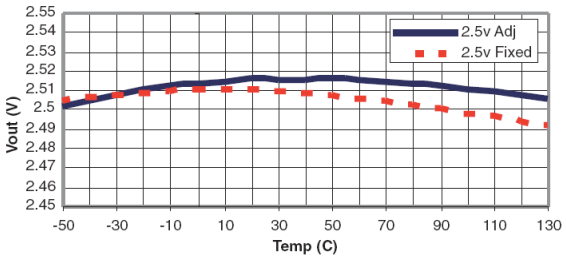

Fig. 11: V_{IN}=4.0V, I_{OUT}=10mA

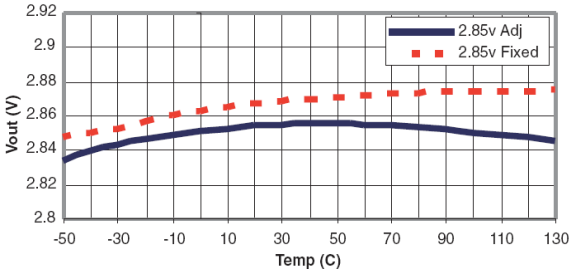

Fig. 12: V_{IN}=4.85V, I_{OUT}=10mA

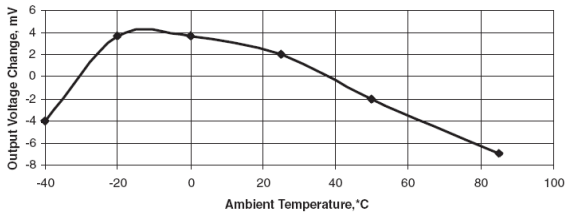

Fig. 13: Line Regulation vs Temperature
V_{OUT}=1.8V (Adj), V_{IN}=3.3V

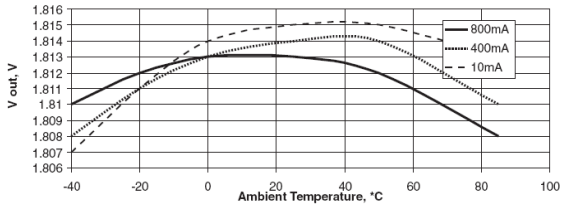

Fig. 14: Output Voltage vs Temperature
Different I_{OUT}, V_{OUT}=1.8V (Adj), V_{IN}=3.3V

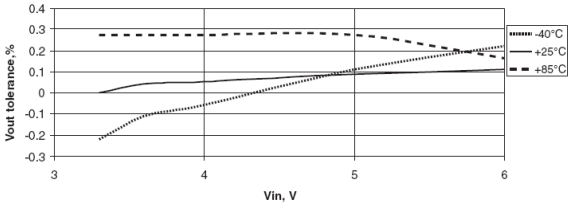

Fig. 15: Line Regulation over Temperature
I_{LOAD}=800mA, V_{OUT}=1.8V(adj)

APPLICATION INFORMATION

OUTPUT CAPACITOR

To ensure the stability of the SPX1117, an output capacitor of at least 2.2µF (tantalum or ceramic) or 10µF (aluminum) is required. The value may change based on the application requirements of the output load or temperature range. The value of ESR can vary based on the type of capacitor used in the applications to guarantee stability. The recommended value for ESR is 0.5Ω or less. A larger value of output capacitance (up to 100µF) can improve the load transient response.

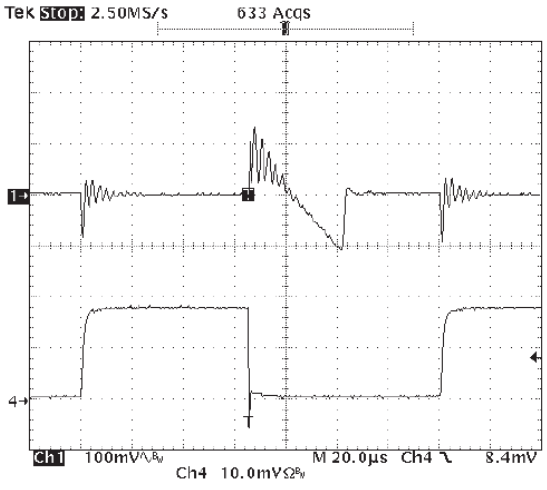

Fig. 16: Load Step Response 0mA to 800mA
V_{IN}=3.3V, V_{OUT}=1.8V, C_{IN}=10µF, C_{OUT}=2.2µF, Ceramic
Signal 1=V_{OUT}, Signal 4=I_{LOAD}

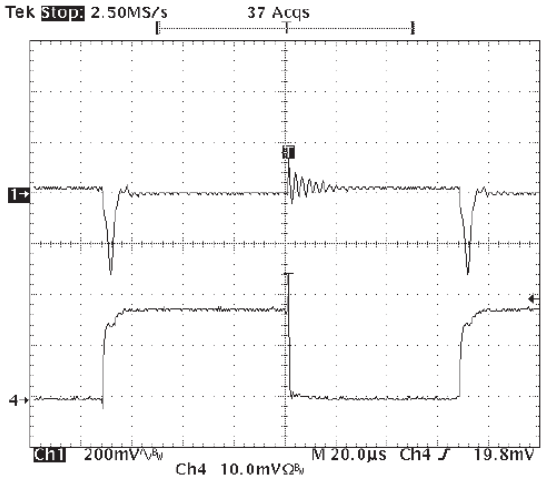

Fig. 17: Load Step Response 0mA to 800mA
V_{IN}=3.3V, V_{OUT}=1.8V, C_{IN}=10µF, C_{OUT}=2.2µF, OSCON
Signal 1=V_{OUT}, Signal 4=I_{LOAD}

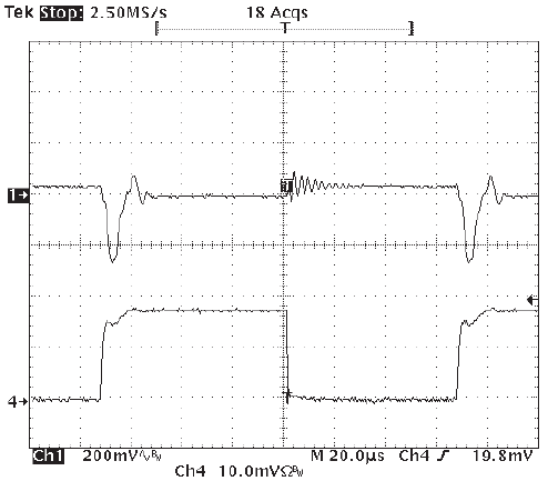

Fig. 18

SOLDERING METHODS

The SPX1117 SOT-223 package is designed to be compatible with infrared reflow or vapor-phase reflow soldering techniques. During soldering, the non-active or mildly active fluxes may be used. The SPX1117 die is attached to the heatsink lead which exits opposite the input, output, and ground pins.

Hand soldering and wave soldering should be avoided since these methods can cause damage to the device with excessive thermal gradients on the package. The SOT-223 recommended soldering method are as follows: vapor phase reflow and infrared reflow with the component preheated to within 65°C of the soldering temperature range.

THERMAL CHARACTERISTICS

The thermal resistance of SPX1117 (SOT-223 package) is 15°C/W from junction to tab and 31°C/W from tab to ambient for a total of 46 °C/W from junction to ambient (Table 1). The SPX1117 features the internal thermal limiting to protect the device during overload conditions. Special care needs to be taken during continuous load conditions such that the maximum junction temperature does not exceed 125 °C. Thermal protection is activated at >155°C and deactivated at <140 °C.

Taking the FR-4 printed circuit board and 1/16 thick with 1 ounce copper foil as an experiment (fig.19), the PCB material is effective at transmitting heat with the tab

attached to the pad area and a ground plane layer on the backside of the substrate. Refer to table 1 for the results of the experiment.

The thermal interaction from other components in the application can affect the thermal resistance of the SPX1117. The actual thermal resistance can be determined with experimentation.

SPX1117 power dissipation is calculated as follows:

$$P_D = (V_{IN} - V_{OUT}) \times I_{OUT}$$

Maximum Junction Temperature

$$T_J = T_{A(MAX)} + P_D \times thermal\ resistance\ (Jct\ to\ amb.)$$

Maximum junction temperature must not exceed 125°C.

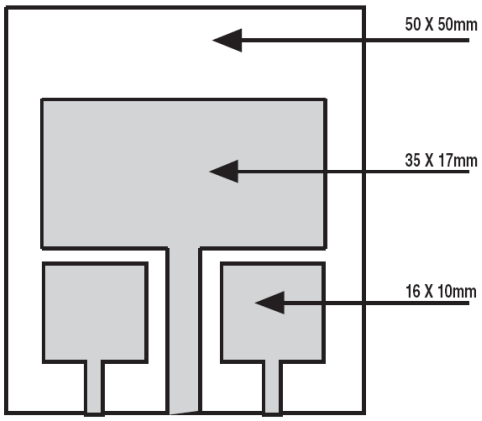

Fig. 19: Substrate Layout for SOT-223

RIPPLE REJECTION

Ripple rejection can be improved by adding a capacitor between the ADJ pin and ground as shown in Figure 23. When ADJ pin bypassing is used, the value of the output capacitor required increases to its maximum. If the ADJ pin is not bypassed, the value of the output capacitor can be lowered to 10µF for an electrolytic aluminum capacitor or 2.2µF for a ceramic or solid tantalum capacitor (Fig 22).

However the value of the ADJ-bypass capacitor should be chosen with respect to the following equation:

$$C = \frac{1}{6.28 \times F_R \times R_1}$$

Where

C: value of capacitor in Farads
F_R: ripple frequency in Hz
R1: value of resistor R1 in ohms

If an ADJ-bypass capacitor is used, the amplitude of the output ripple will be independent of the output voltage. If an ADJ-bypass capacitor is not used, the output ripple will be proportional to the ratio of the output voltage to the reference voltage:

$$M = \frac{V_{OUT}}{V_{REF}}$$

Where M=multiplier for the ripple seen when the ADJ pin is optimally bypassed.

V_{REF}=1.25V

Ripple rejection for the adjustable version is shown in Figure 20.

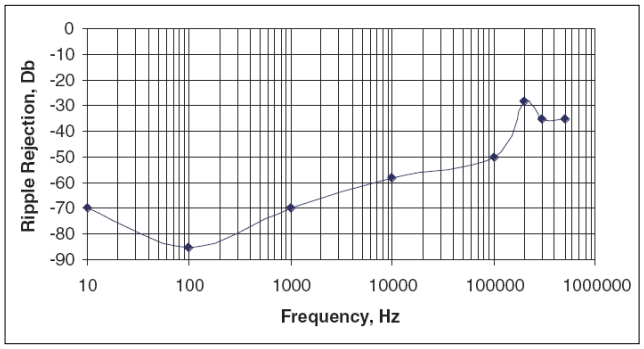

Fig. 20: Ripple Rejection
V_{IN}=3.3V, V_{OUT}=1.8V(adj), I_{LOAD}=200mA

OUTPUT VOLTAGE

The output of the adjustable regulator can be set to any voltage between 1.25V and 15V. The value of V_{OUT} can be quickly approximated using the formula

$$V_{OUT} = 1.25 \times \frac{R_1 + R_2}{R_1}$$

A small correction to this formula is required depending on the values of resistors R1 and R2, since the adjustable pin current (approx 50µA) flows through R2. When IADJ is taken into account, the formula becomes

$$V_{OUT} = V_{REF} \times \frac{R_1 + R_2}{R_1} + I_{ADJ} \times R_2$$

Where V_{REF}=1.25V

PRE-BIAS OUTPUT VOLTAGE START-UP

The SPX1117 is not intended for operations requiring start-up into a pre-biased load. Proper discharge of the output voltage is recommended prior of turning on the device through the application of the input voltage.

LAYOUT CONSIDERATIONS

Parasitic line resistance can degrade local regulation. In order to avoid this, connect R_1 directly to V_{OUT} as illustrated in figure 25. For the same reason R_2 should be connected to the negative side of the load.

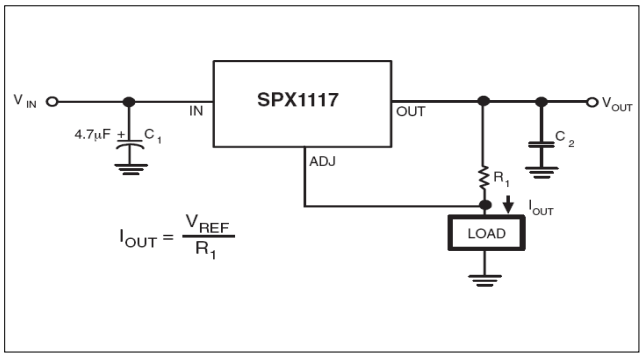

Fig. 21: Current Cource

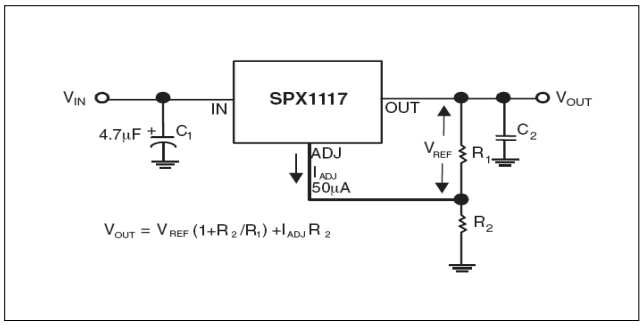

Fig. 22:Typical Adjustable Regulator

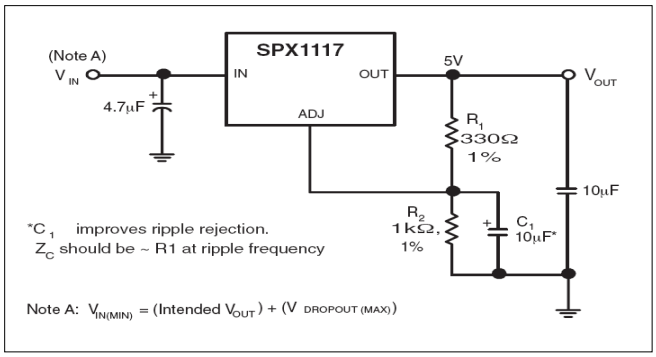

Fig. 23: Improving Ripple Rejection

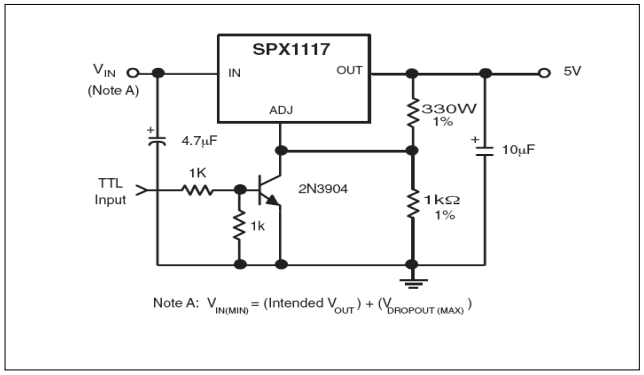

Fig. 24: 5V Regulator with Shutdown

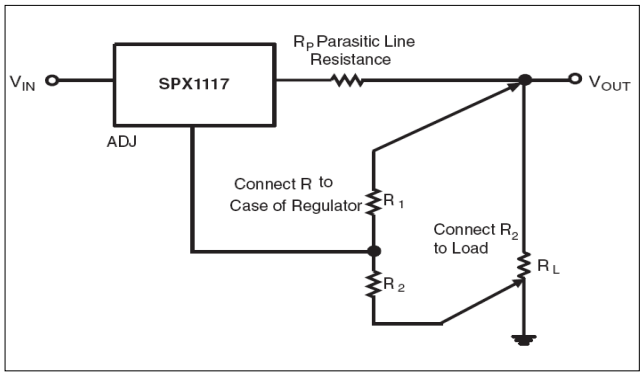

Fig. 25: Recommended Connections for Best Results

PC Board mm²	Topside Copper mm²	Backside Copper mm²	Thermal Resistance Jct to amb. °C/W
2500	2500	2500	46
2500	1250	2500	47
2500	950	2500	49
2500	2500	0	51
2500	1800	0	53
1600	600	1600	55
2500	1250	0	58
2500	915	0	59
1600	600	0	67
900	240	900	72
900	240	0	85

Table 1

MECHANICAL DIMENSIONS

3-PIN SOT-223

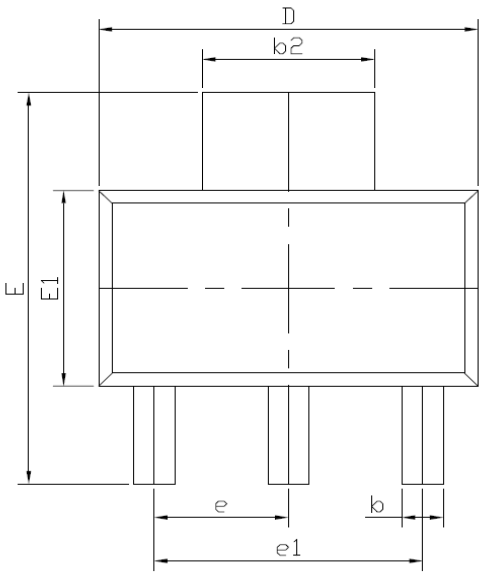

TOP VIEW

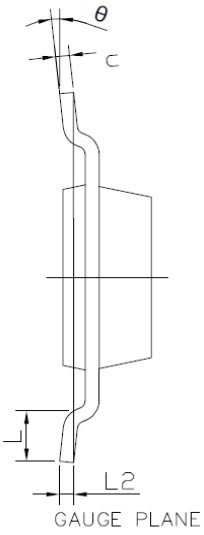

SIDE VIEW 1

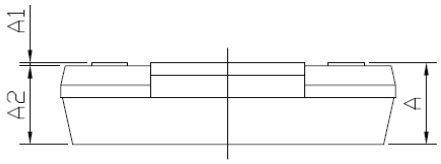

SIDE VIEW 2

DIM / SYMBOL	MIN.	NOM.	MAX.
A	–	–	1.80
A1	0.02	–	0.10
A2	1.50	1.60	1.70
b	0.66	0.76	0.84
b2	2.90	3.00	3.10
c	0.23	0.30	0.35
D	6.30	6.50	6.70
E	6.70	7.00	7.30
E1	3.30	3.50	3.70
e	2.30 BSC		
e1	4.60 BSC		
L	0.75	–	–
L2	0.25 BSC		
θ	0°	–	10°
N	3		

TERMINAL DETAILS

NOTE : ALL DIMENSIONS ARE IN MILLIMETERS, ANGLES ARE IN DEGREES.

Drawing No.: POD-00000098

Revision: D

RECOMMENDED LAND PATTERN AND STENCIL

3-PIN SOT-223

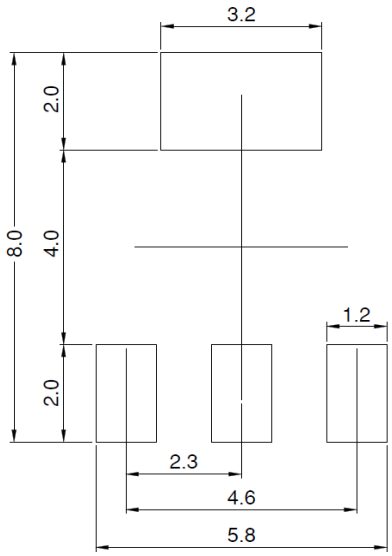

TYPICAL RECOMMENDED LAND PATTERN

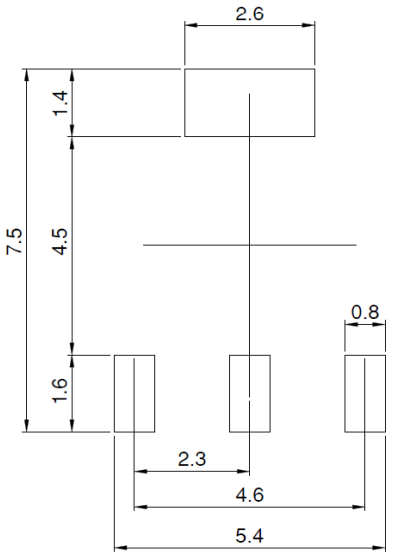

TYPICAL RECOMMENDED STENCIL

NOTE : ALL DIMENSIONS ARE IN MILLIMETERS, ANGLES ARE IN DEGREES.

Drawing No.: POD-00000098

Revision: D

REVISION HISTORY

Revision	Date	Description
2.0.0	06/23/2010	Reformat of Datasheet
2.1.0	08/24/2011	Addition of the Pre-Bias Output Voltage Start-up section
2.1.1	09/05/2018	Update to MaxLinear logo. Update format and Ordering Information. Removed obsolete TO-263-3.
2.2.0	June 10, 2025	**Updated:** ■ Note under "Ordering Information" table. ■ In "Mechanical Dimensions" section, "3-Pin SOT-223" figure from Revision C to Revision D. No change to content; MxL document registration only. ■ In "Recommended Land Pattern and Stencil" section, "3-Pin SOT-223" figure: dimensions corrected.

MaxLinear, Inc.:
5966 La Place Court Suite 100
Carlsbad, CA 92008
Tel.: +1 (760) 692-0711
Fax: +1 (760) 444-8598
www.maxlinear.com

The content of this document is furnished for informational use only, is subject to change without notice, and should not be construed as a commitment by MaxLinear, Inc. MaxLinear, Inc. assumes no responsibility or liability for any errors or inaccuracies that may appear in the informational content contained in this document. Complying with all applicable copyright laws is the responsibility of the user. Without limiting the rights under copyright, no part of this document may be reproduced into, stored in, or introduced into a retrieval system, or transmitted in any form or by any means (electronic, mechanical, photocopying, recording, or otherwise), or for any purpose, without the express written permission of MaxLinear, Inc.

EXCEPT AS OTHERWISE PROVIDED EXPRESSLY IN WRITING BY MAXLINEAR, AND TO THE MAXIMUM EXTENT PERMITTED BY LAW: (A) THE MAXLINEAR PRODUCTS ARE PROVIDED ON AN "AS IS" BASIS WITHOUT REPRESENTATIONS OR WARRANTIES OF ANY KIND, INCLUDING WITHOUT LIMITATION ANY IMPLIED OR STATUTORY WARRANTIES AND ANY WARRANTIES OF MERCHANTABILITY, FITNESS FOR A PARTICULAR PURPOSE, NON-INFRINGEMENT, OR TITLE; AND (B) MAXLINEAR DOES NOT GUARANTEE THAT THE PRODUCTS WILL BE FREE OF ERRORS OR DEFECTS. MAXLINEAR PRODUCTS SHOULD NOT BE USED IN ANY EMERGENCY, SECURITY, MILITARY, LIFE-SAVING, OR OTHER CRITICAL USE CASE WHERE A FAILURE OR MALFUNCTION COULD CAUSE PERSONAL INJURY OR DEATH, OR DAMAGE TO OR LOSS OF PROPERTY. USERS ASSUME ALL RISK FOR USING THE MAXLINEAR PRODUCTS IN SUCH USE CASE. CUSTOMERS AND USERS ARE SOLELY RESPONSIBLE FOR USING THEIR OWN SKILL AND JUDGMENT TO DETERMINE WHETHER MAXLINEAR PRODUCTS ARE SUITABLE FOR THE INTENDED USE CASE.

MaxLinear, Inc. may have patents, patent applications, trademarks, copyrights, or other intellectual property rights covering subject matter in this document. Except as expressly provided in any written license agreement from MaxLinear, Inc., the furnishing of this document does not give you any license to these patents, trademarks, copyrights, or other intellectual property.

MaxLinear, the MaxLinear logo, and any other MaxLinear trademarks (including but not limited to MxL, Full-Spectrum Capture, FSC, AirPHY, Puma, AnyWAN, VectorBoost, MXL WARE, and Panther) are all property of MaxLinear, Inc. or one of MaxLinear's subsidiaries in the U.S.A. and other countries. All rights reserved.

All third-party marks and logos are trademarks™ or registered® trademarks of their respective holders/owners. Use of such marks does not imply any affiliation with, sponsorship or endorsement by the owners/holders of such trademarks. All references by MaxLinear to third party trademarks are intended to constitute nominative fair use under applicable trademark laws.

The URLs provided are for informational purposes only; they do not constitute an endorsement or an approval by MaxLinear of any of the products or services of the corporation or organization or individual. MaxLinear bears no responsibility for the accuracy, legality or content of the external site or for that of subsequent links. Contact the external site for answers to questions regarding its content.

© 2025 MaxLinear, Inc. All rights reserved.

ENTEGRECİ

Bu belge www.entegreci.com üzerinden sunulmaktadır.

Elektronik komponent tedarikinde Entegreci

Entegreci, Eskişehir merkezli, Türkiye geneline satış yapan bir elektronik komponent mağazasıdır. Entegreler (IC), mikrodenetleyiciler, transistörler, diyotlar, pasif elemanlar, konnektörler, modüller ve geliştirme kartları tek adetten seri üretim adetlerine kadar satılır. Ürün sayfalarında güncel stok durumunu, fiyatı ve datasheet bağlantısını bulabilirsiniz.

Parça koduyla arama

Üretici parça numarasını yazın; stok ve fiyatı hemen görün.

www.entegreci.com

Ürün kategorileri

Entegreden kapasitöre tüm elektronik komponent kategorileri.

Kategorilere göz atın

Üreticiler

Aradığınız üreticinin ürünlerini tek sayfada inceleyin.

Üreticileri görün

Toplu alım ve teklif

Listede olmayan ya da yüksek adetli parçalar için teklif isteyin.

Teklif isteyin

www.entegreci.com | **destek@entegreci.com** | **0850 305 90 34**

Entegreci is an online electronic components store based in Türkiye. Search by manufacturer part number to see stock, prices and datasheets for integrated circuits, microcontrollers, transistors, passive components and connectors, or request a quote for parts that are not listed.

Bu sayfa Entegreci tarafından eklenmiştir. Belgenin önceki sayfaları asıl yayıncısına aittir ve içeriği değiştirilmemiştir; en güncel sürüm için belgenin yayıncısına başvurun.