SPX1587

3A Low Dropout Voltage Regulator

June 26, 2023 Rev. 2.0.1

GENERAL DESCRIPTION

The SPX1587 is a low power positive-voltage regulator designed to satisfy moderate power requirements with a cost effective, small footprint solution.

This device is an excellent choice for use in battery-powered applications and portable computers. The SPX1587 features very low quiescent current and a low dropout voltage of 1.1V at a full load. As output current decreases, quiescent current flows into the load, increasing efficiency. SPX1587 is available in adjustable or fixed 1.5V, 2.5V, 3.3V and 5.0V output voltages.

The SPX1587 is offered in several 3-pin surface mount packages: TO-252, TO-220 and TO-263. An output capacitor of 10µF ceramic or tantalum provides unconditional stability.

Adjustable and 3.3V TO-263 versions available, TO-252 and TO-220 versions obsolete

APPLICATIONS

- **Desktop PC's Servers**
- **Powering VGA and Sound Cards**
- **Adjustable Power Supplies**
- **Portable Instrumentation**

FEATURES

- **Guaranteed 3A Output Current**
- **Three Terminal Adjustable or Fixed 1.5V, 2.5V, 3.3V and 5.0V**
- **Low Quiescent Current**
- **Low Dropout Voltage: 1.1V at 3A**
- **Line Regulation: 0.1%**
- **Load Regulation: 0.1%**
- **Stable with 10uF Ceramic Capacitor**
- **Over Current and Thermal Protection**
- **Similar to Industry Standard LT1587**
- **RoHS Compliant Lead Free 3-Pin TO-220, TO-252 and TO-263 Packages**

FUNCTIONAL DIAGRAM

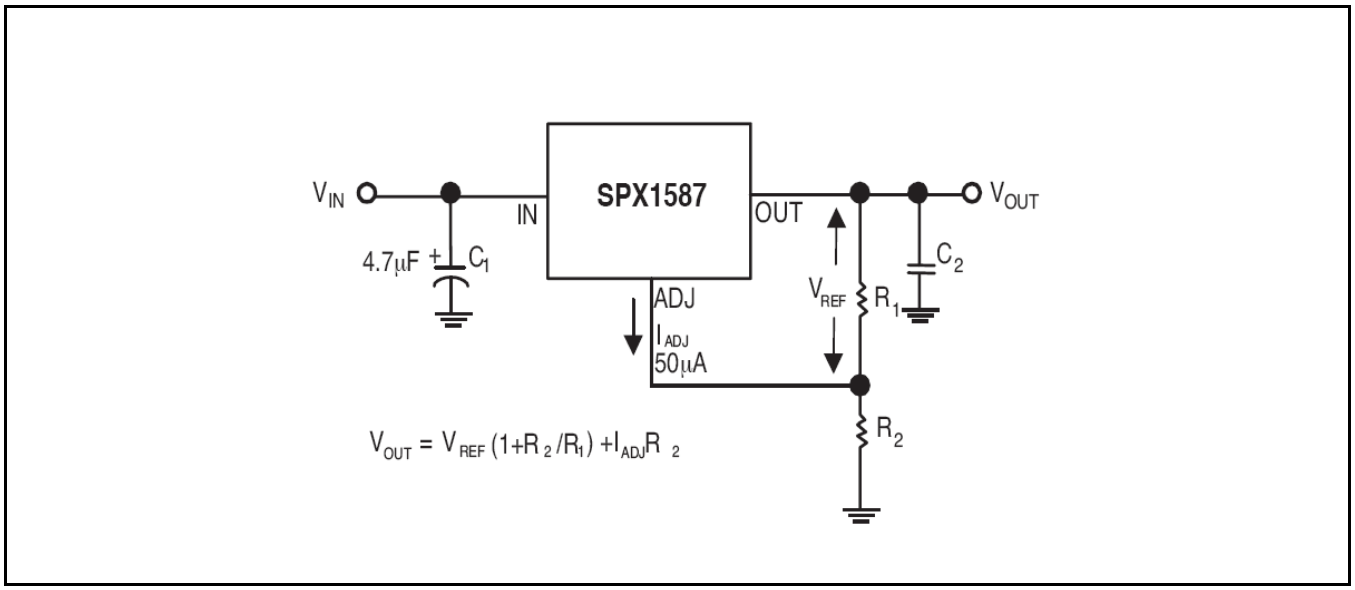

Fig. 1: SPX1587 Functional Diagram (Adjustable version)

ABSOLUTE MAXIMUM RATINGS

These are stress ratings only and functional operation of the device at these ratings or any other above those indicated in the operation sections of the specifications below is not implied. Exposure to absolute maximum rating conditions for extended periods of time may affect reliability.

Input Supply Voltage V_{IN} ..... +10.0V
Input to Output Voltage ..... +8.8V
Storage Temperature ..... -65°C to 150°C
Power Dissipation ..... Internally Limited
Lead Temperature (Soldering, 5 sec) ..... 260°C
ESD Rating (HBM - Human Body Model) 2kV

OPERATING RATINGS

Adjustable and 3.3V TO-263 versions available, TO-252 and TO-220 versions obsolete

Junction Temperature Range .....-40°C to 125°C
Thermal Resistance
TO-220 θ_{JC} ..... 3°C/W
TO-220 θ_{JA} .....29.4°C/W
TO-263 θ_{JC} ..... 3°C/W
TO-263 θ_{JA} .....31.4°C/W
TO-252 θ_{JC} ..... 6°C/W
TO-252 θ_{JA} ..... 50°C/W

ELECTRICAL SPECIFICATIONS

Specifications with standard type are for an Operating Ambient Temperature of T_A = 25°C only; limits applying over the full Operating Temperature range (-40°C to +85°C) are denoted by a "•". Minimum and Maximum limits are guaranteed through test, design, or statistical correlation. Typical values represent the most likely parametric norm at T_A = 25°C, and are provided for reference purposes only. Unless otherwise indicated, V_{IN} = V_{OUT} + 1.5V, T_A = 25°C, C_{IN} = C_{OUT} =10µF, I_{OUT}=10mA.

Parameter	Min.	Typ.	Max.	Units		Conditions
1.5V Version						
Output Voltage SPX1587A	1.485	1.500	1.515	V		I_{OUT}=10mA, V_{OUT}=3.5V
	1.470		1.530		•	10mA≤I_{OUT}≤3A, 3.0V≤V_{OUT}≤10V
2.5V Version						
Output Voltage SPX1587	2.450	2.500	2.550	V		I_{OUT}=10mA, V_{OUT}=4.5V
	2.425		2.575		•	10mA≤I_{OUT}≤3A, 4.25V≤I_{OUT}≤10V
3.3V Version						
Output Voltage SPX1587A	3.267	3.300	3.333	V		I_{OUT}=10mA, V_{OUT}=5V
	3.234		3.366		•	10mA≤I_{OUT}≤3A, 4.75V≤V_{OUT}≤10V
Output Voltage SPX1587	3.234	3.300	3.366	V		I_{OUT}=10mA, V_{OUT}=5V
	3.201		3.399		•	10mA≤I_{OUT}≤3A, 4.75V≤V_{OUT}≤10V
5.0V Version						
Output Voltage SPX1587A	4.950	5.000	5.050	V		I_{OUT}=10mA, V_{OUT}=7V
	4.900		5.100		•	10mA≤I_{OUT}≤3A, 6.50V≤V_{OUT}≤10V
All Voltage Options						
Reference Voltage SPX1587A	1.238	1.250	1.262	V		I_{OUT}=10mA, V_{IN}-V_{OUT}=2V
	1.225		1.275		•	10mA≤I_{OUT}≤3A, 1.50V≤V_{IN}-V_{OUT}≤10V
Reference Voltage SPX1587	1.225	1.250	1.275	V		I_{OUT}=10mA, V_{IN}-V_{OUT}=2V
	1.212		1.287		•	10mA≤I_{OUT}≤3A, 1.50V≤V_{IN}-V_{OUT}≤10V
Output Voltage Temperature Stability – SPX1587A		0.3		%		
Output Voltage Temperature Stability – SPX1587		0.5		%		
Line Regulation		0.1	0.2	%		3.0V≤V_{IN}≤10V, V_{OUT}=1.5V
						4.25V≤V_{IN}≤10V, V_{OUT}=2.5V
						4.75V≤V_{IN}≤10V, V_{OUT}=3.3V
						6.50V≤V_{IN}≤10V, V_{OUT}=5.0V
Load Regulation		0.1	0.3	%		10mA≤I_{OUT}≤3A, V_{OUT}=1.5V
						10mA≤I_{OUT}≤3A, V_{OUT}=2.5V
						10mA≤I_{OUT}≤3A, V_{OUT}=3.3V
						10mA≤I_{OUT}≤3A, V_{OUT}=5.0V

Parameter	Min.	Typ.	Max.	Units		Conditions
Dropout Voltage (note 2)		1.00		V		I_{OUT}=1A
		1.05				I_{OUT}=2A
		1.10	1.2			I_{OUT}=3A
Minimum Load Current (note 4)		4	10	mA		
Quiescent Current		4	10	mA		Fixed Voltage Versions
Adjust Pin Current		50		µA		
			120	µA	•	
Current Limit	3.2	5		A		V_{IN}-V_{OUT}=2V
Thermal Regulation		0.01	0.1	%/W		25°C, 30ms pulse
Ripple Rejection	60	75		dB		F_{RIPPLE}=120Hz, V_{IN}-V_{OUT}=2V, V_{RIPPLE}=1V_{PP}
Long Term Stability		0.03		%		125°C, 1000 hours
RMS Output Noise		0.03		%		% of V_{OUT}, 10Hz ≤ f ≤ 10kHz

Note 1: Output temperature coefficient is defined as the worst-case voltage change divided by the total temperature range
Note 2: Dropout voltage is defined as the input to output differential at which the output voltage drops 100mV below its nominal value measured at 1V differential at very low values of programmed output voltage, the minimum input supply voltage of 2V (2.3V over temperature) must be taken into account.
Note 3: Thermal regulation is defined as the change in output voltage at a time T after a change in power dissipation is applied. Excluding load or line regulation effect.
Note 4: Adjustable Version Only.

BLOCK DIAGRAM

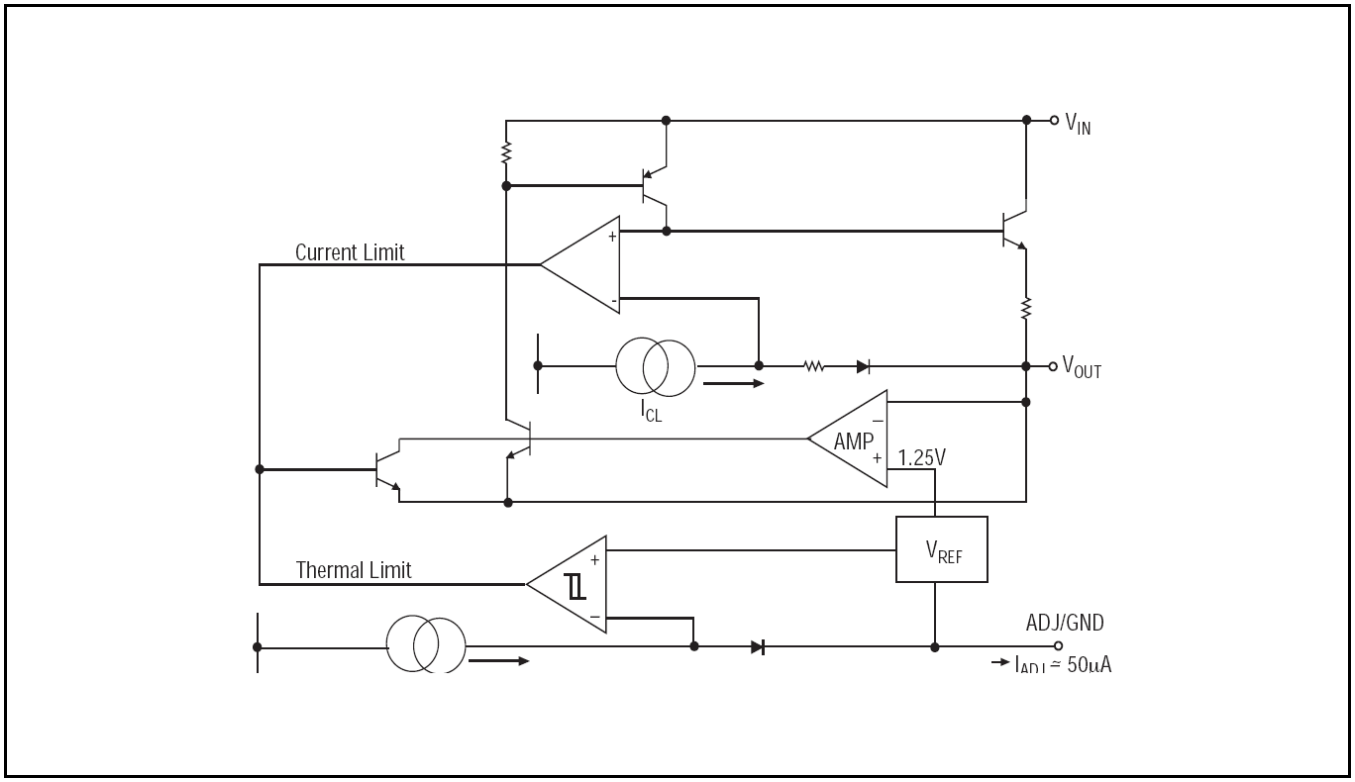

Fig. 2: SPX1587 Block Diagram

PIN ASSIGNMENT

Adjustable and 3.3V TO-263 versions available, TO-252 and TO-220 versions obsolete

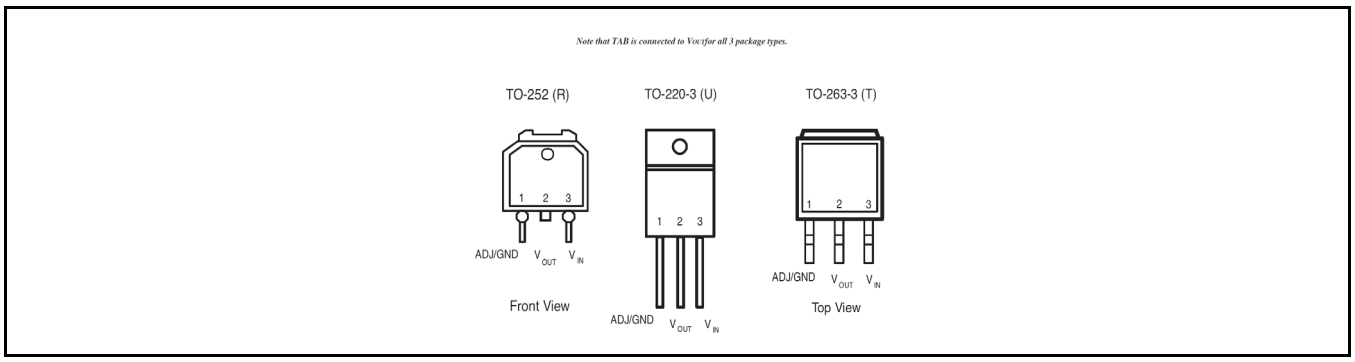

Fig. 3: SPX1587 Pin Assignment

PIN DESCRIPTION

Name	Pin Number	Description
ADJ/GND	1	Adjustable Voltage Pin or Ground signal for fixed voltage versions.
VOUT	2	Output Voltage
VIN	3	Input Voltage
TAB	TAB	Tab is connected to VOUT (pin 2) for all packages

ORDERING INFORMATION

Part Number	Junction Temperature Range	Lead-Free	Package	Packing Quantity
SPX1587AT-L/TR	-40°C≤T_J≤+125°C	Yes	TO-263-3	500/Tape & Reel
SPX1587AT-L-3-3/TR				

NOTE: For more information about part numbers, as well as the most up-to-date ordering information and additional information on environmental rating, go to www.maxlinear.com/SPX1587.

TYPICAL PERFORMANCE CHARACTERISTICS

All data taken at V_{IN} = V_{OUT} + 1.5V, T_A = 25°C, C_{IN} = C_{OUT} =10µF, I_{OUT}=10mA unless otherwise specified - Schematic and BOM from Application Information section of this datasheet.

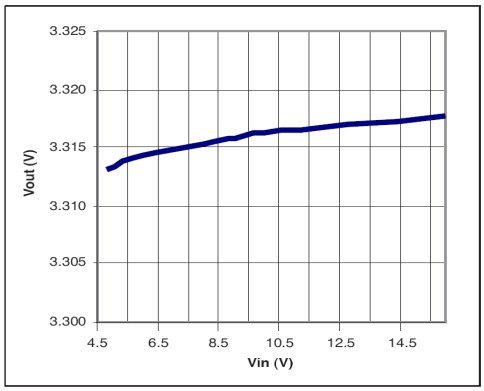

Fig. 4: Line Regulation for SPX1587U-3-3
I_{OUT}=10mA

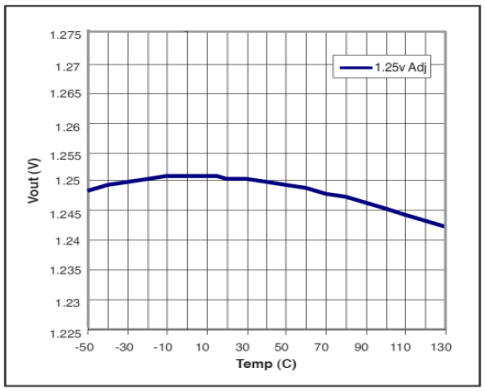

Fig. 5: V_{OUT} versus Temperature
V_{IN}=2.5V, I_{OUT}=10mA

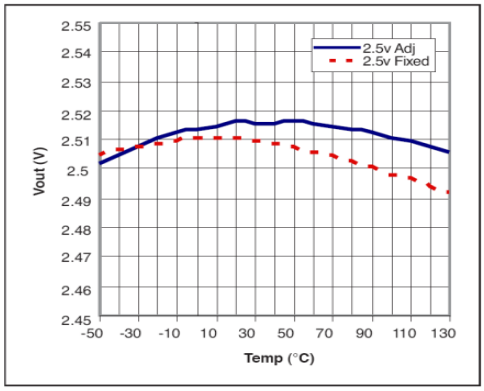

Fig. 6: V_{OUT} versus Temperature
V_{IN}=4.0V, I_{OUT}=10mA

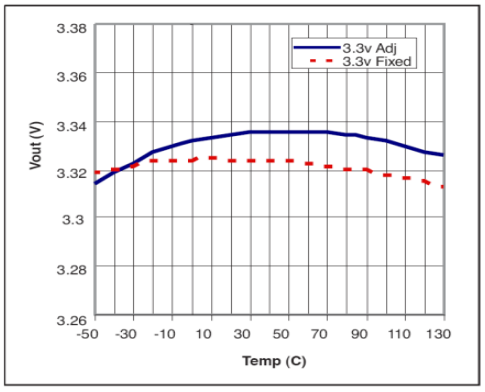

Fig. 7: V_{OUT} versus Temperature
V_{IN}=5.0V, I_{OUT}=10mA

APPLICATION INFORMATION

OUTPUT CAPACITOR

To ensure the stability of the SPX1587, an output capacitor of at least 10µF (ceramic or tantalum) or 22µF (aluminum) is required. The value may change based on the application requirements of the output load or temperature range. The value of ESR can vary based on the type of capacitor used in the applications to guarantee stability. The recommended value for ESR is 0.5Ω or less. A larger value of output capacitance (up to 100µF) can improve the load transient response.

SOLDERING METHODS

The SPX1587 die is attached to the heatsink lead which exits opposite the input, output, and ground pins.

THERMAL CHARACTERISTICS

The SPX1587 features the internal thermal limiting to protect the device during overload conditions. Special care needs to be taken during continuous load conditions such that the maximum junction temperature does not exceed 125°C. Thermal protection is activated at >179°C and deactivated at <165 °C.

The thermal interaction from other components in the application can affect the

thermal resistance of the SPX1587. The actual thermal resistance can be determined with experimentation.

The SPX1587 power dissipation is calculated as follows:

$$P_D = (V_{IN} - V_{OUT}) \times I_{OUT}$$

Maximum Junction Temperature range:

$$T_J = T_{A(MAX)} + P_D \times \theta_{JA}$$

Where θ_{JA} is the junction-to-ambient thermal resistance of the package.

Maximum junction temperature must not exceed 125°C.

RIPPLE REJECTION

Ripple rejection can be improved by adding a capacitor between the ADJ pin and ground as shown in Figure 11. When ADJ pin bypassing is used, the value of the output capacitor required increases to its maximum. If the ADJ pin is not bypassed, the value of the output capacitor can be lowered to 22µF for an electrolytic aluminum capacitor or 10µF for a solid tantalum capacitor (Fig 10).

However, the value of the ADJ-bypass capacitor should be chosen with respect to the following equation:

$$C = \frac{1}{6.28 \times F_R \times R_1}$$

Where

C = value of the capacitor in Farads (select an equal or larger standard value)

F_R= ripple frequency in Hz

R_1= value of resistor R1 in Ohms.

If an ADJ-bypass capacitor is used, the amplitude of the output ripple will be independent of the output voltage. If an ADJ-bypass capacitor is not used, the output ripple will be proportional to the ratio of the output voltage to the reference voltage:

$$M = \frac{V_{OUT}}{V_{REF}}$$

Where

M = multiplier for the ripple seen when the ADJ pin is optimally bypassed.

V_{REF}=1.25V

Ripple rejection for the adjustable version is showing in Figure 8.

OUTPUT VOLTAGE

The output of the adjustable regulator can be set to any voltage between 1.25V and 15V. The value of V_{OUT} can be quickly approximated using the formula

$$V_{OUT} = 1.25 \times \frac{R_1 + R_2}{R_1}$$

Small correction to this formula is required depending on the values of resistors R1 and R2, since the adjustable pin current (approx 50µA) flows through R2. When I_{ADJ} is taken into account, the formula becomes

$$V_{OUT} = V_{REF} \times \left(1 + \frac{R_2}{R_1}\right) + I_{ADJ} \times R_2$$

Where

V_{REF}=1.25V

LAYOUT CONSIDERATIONS

Parasitic line resistance can degrade load regulation. In order to avoid this, connect R1 directly to V_{OUT} as illustrated in Figure 13. For the same reason, R2 should be connected to the negative side of the load.

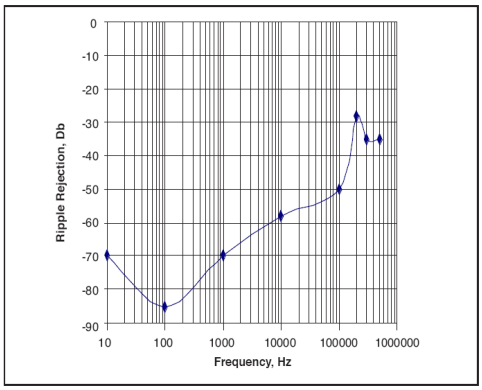

Fig. 8: Ripple Rejection
V_{IN}=3.3V, V_{OUT}=1.8V(adj), I_{LOAD}=200mA

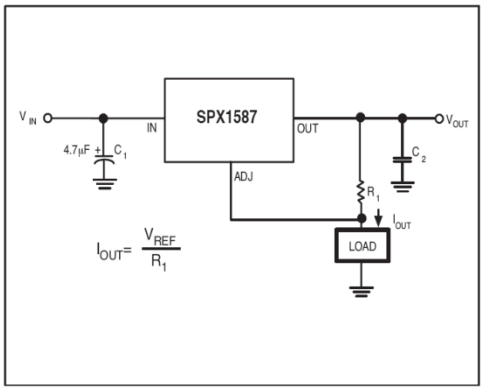

Fig. 9: Current Source

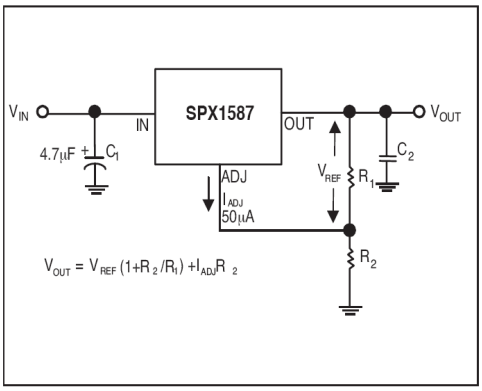

Fig. 10: Typical Adjustable Regulator

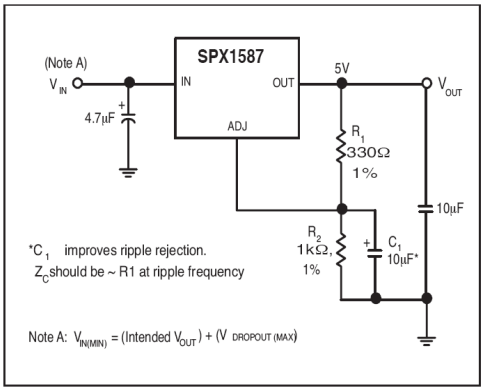

Fig. 11: Improving Ripple Rejection

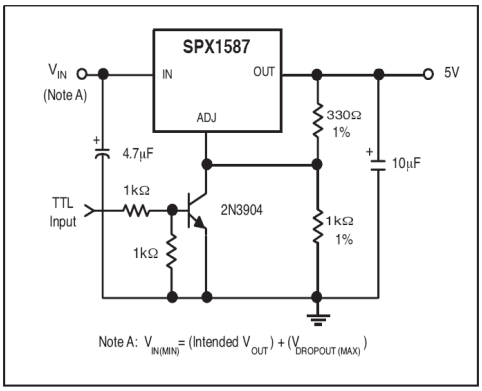

Fig. 12: 5V Regulator with Shutdown

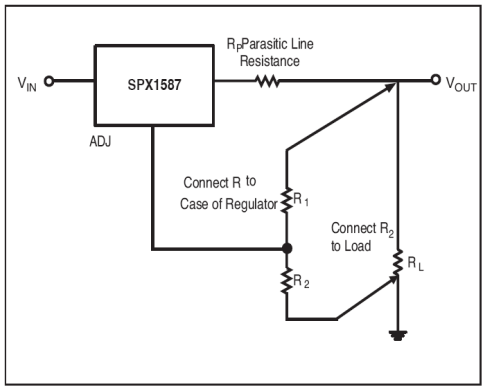

Fig. 13: Recommended Connections for Best Results

PACKAGE SPECIFICATION

3-PIN TO-263

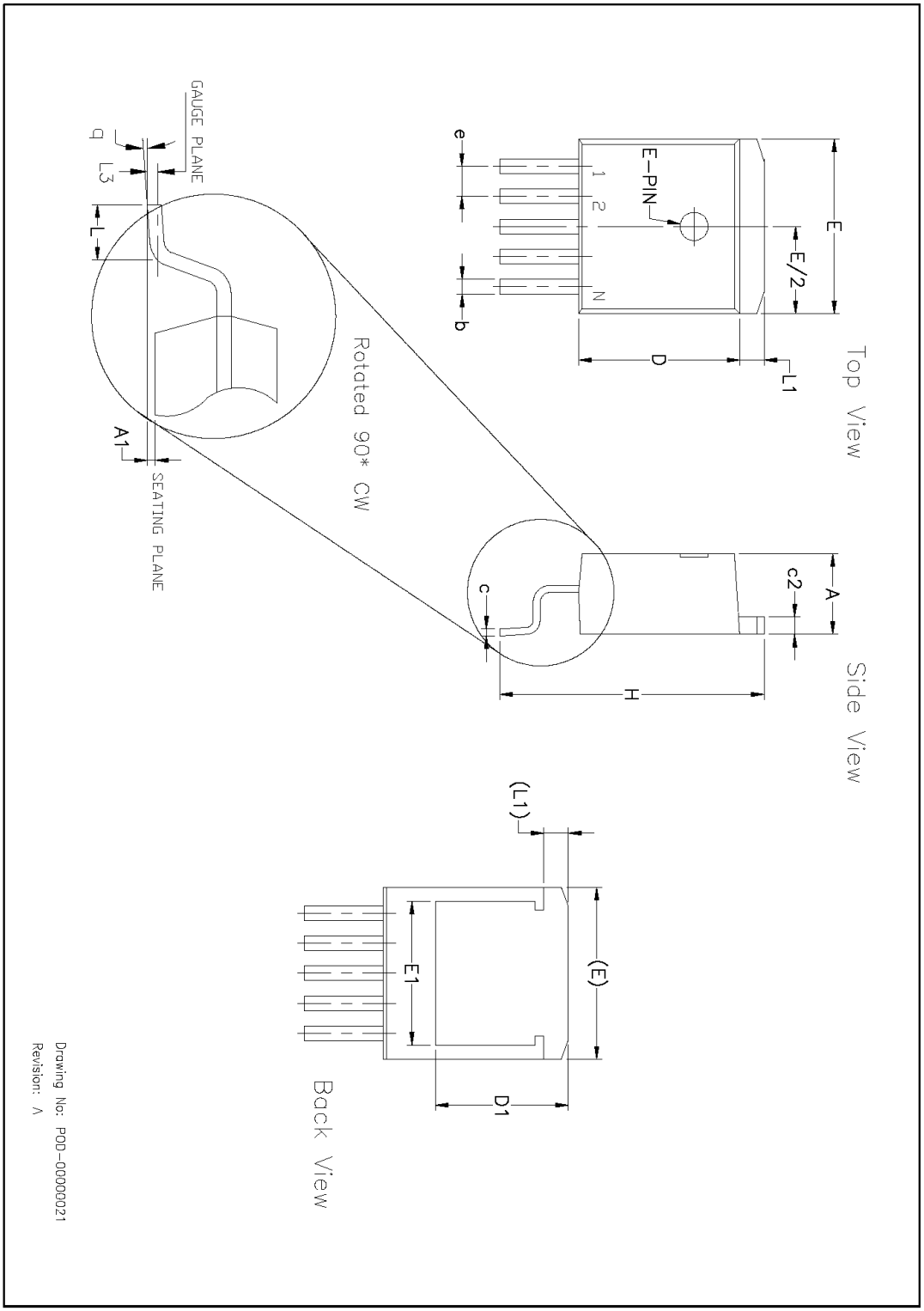

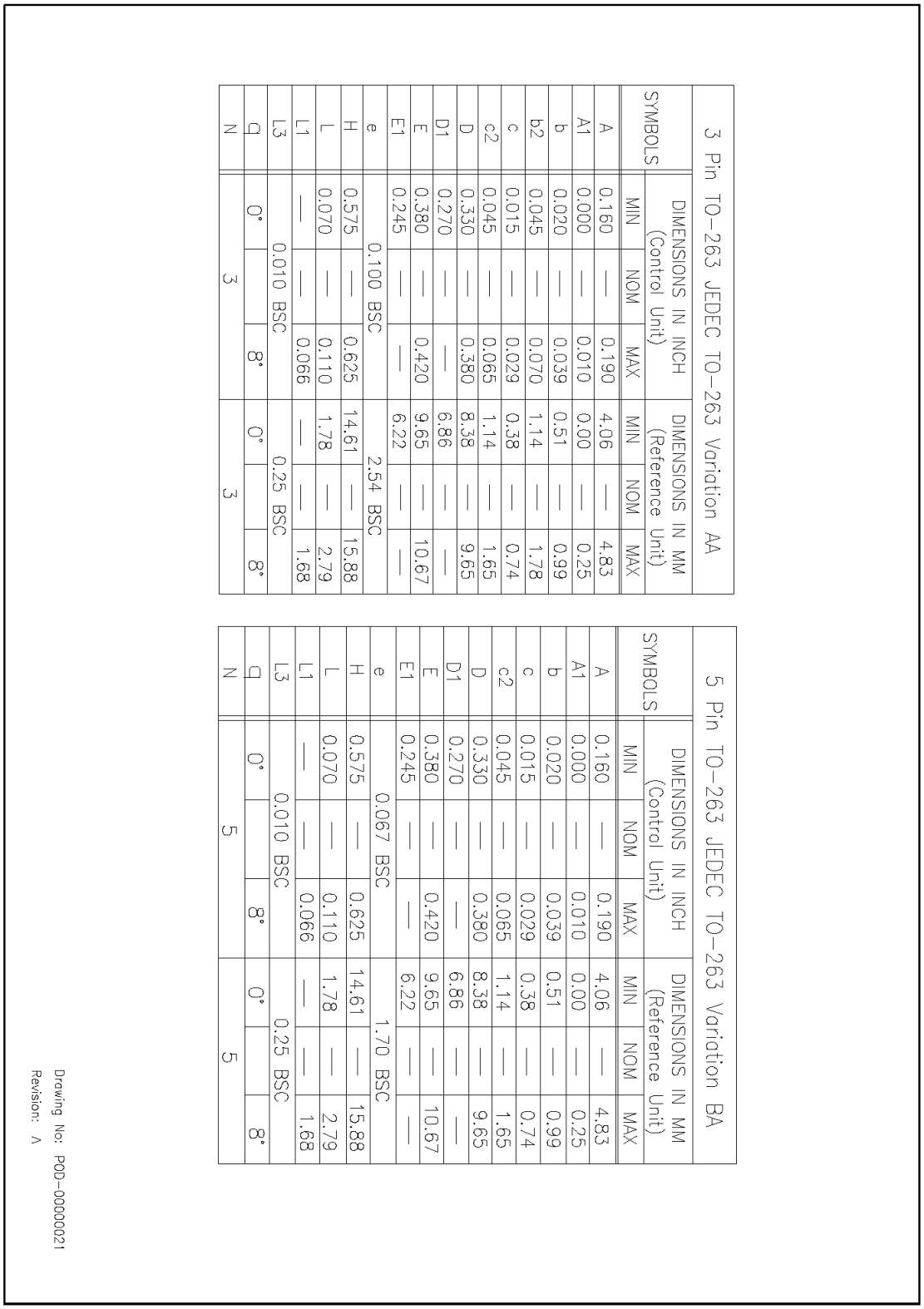

3 Pin TO-263 JEDEC TO-263 Variation AA

SYMBOLS	DIMENSIONS IN INCH (Control Unit)			DIMENSIONS IN MM (Reference Unit)		
	MIN	NOM	MAX	MIN	NOM	MAX
A	0.160	—	0.190	4.06	—	4.83
A1	0.000	—	0.010	0.00	—	0.25
b	0.020	—	0.039	0.51	—	0.99
b2	0.045	—	0.070	1.14	—	1.78
c	0.015	—	0.029	0.38	—	0.74
c2	0.045	—	0.065	1.14	—	1.65
D	0.330	—	0.380	8.38	—	9.65
D1	0.270	—	—	6.86	—	—
E	0.380	—	0.420	9.65	—	10.67
E1	0.245	—	—	6.22	—	—
e	0.100 BSC			2.54 BSC		
H	0.575	—	0.625	14.61	—	15.88
L	0.070	—	0.110	1.78	—	2.79
L1	—	—	0.066	—	—	1.68
L3	0.010 BSC			0.25 BSC		
q	0°		8°	0°		8°
N	3			3		

5 Pin TO-263 JEDEC TO-263 Variation BA

SYMBOLS	DIMENSIONS IN INCH (Control Unit)			DIMENSIONS IN MM (Reference Unit)		
	MIN	NOM	MAX	MIN	NOM	MAX
A	0.160	—	0.190	4.06	—	4.83
A1	0.000	—	0.010	0.00	—	0.25
b	0.020	—	0.039	0.51	—	0.99
c	0.015	—	0.029	0.38	—	0.74
c2	0.045	—	0.065	1.14	—	1.65
D	0.330	—	0.380	8.38	—	9.65
D1	0.270	—	—	6.86	—	—
E	0.380	—	0.420	9.65	—	10.67
E1	0.245	—	—	6.22	—	—
e	0.067 BSC			1.70 BSC		
H	0.575	—	0.625	14.61	—	15.88
L	0.070	—	0.110	1.78	—	2.79
L1	—	—	0.066	—	—	1.68
L3	0.010 BSC			0.25 BSC		
q	0°		8°	0°		8°
N	5			5		

Drawing No: POD-00000021
Revision: A

3-PIN TO-220

TO-220 version obsolete

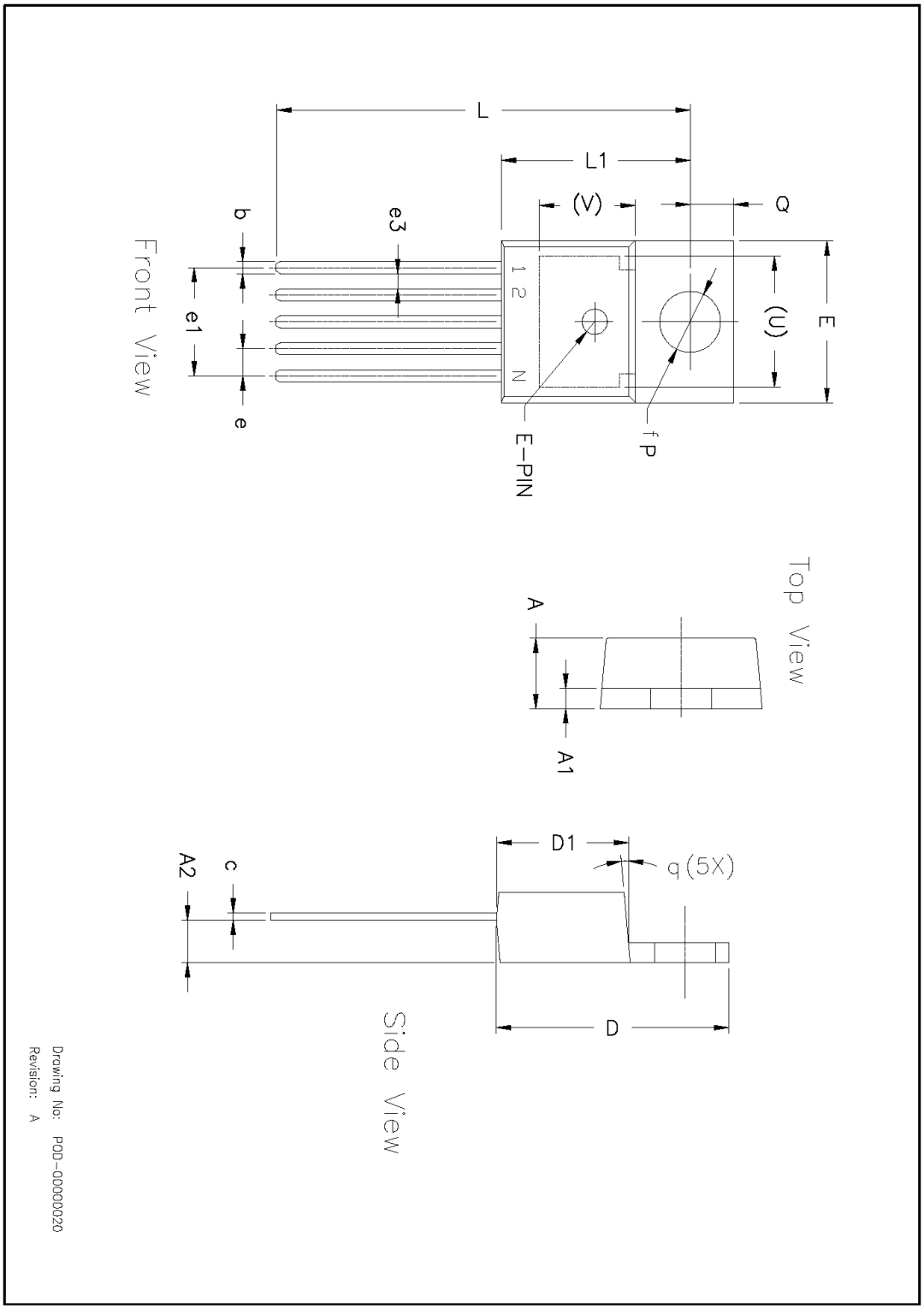

3 Pin TO-220 (Option 1)* JEDEC TO-220-AB

SYMBOLS	DIMENSIONS IN INCH (Control Unit)		DIMENSIONS IN MM (Reference Unit)	
	MIN	MAX	MIN	MAX
A	0.140	0.190	3.56	4.82
A1	0.020	0.055	0.51	1.40
A2	0.080	0.115	2.03	2.92
b	0.015	0.040	0.38	1.02
c	0.014	0.024	0.36	0.61
D	0.560	0.650	14.22	16.51
D1	0.330	0.355	8.38	9.02
D2	0.480	0.507	12.19	12.88
E	0.380	0.420	9.65	10.67
E1	0.270	0.350	6.86	8.89
e	0.100 BSC		2.54 BSC	
e1	0.200 BSC		5.08 BSC	
H1	0.230	0.270	5.84	6.86
L	0.500	0.580	12.70	14.73
L1	——	0.250	——	6.35
P	0.139	0.156	3.53	3.96
Q	0.103	0.113	2.62	2.87
V	0.240 REF		6.10 REF	
q	3°	7°	3°	7°
N	3		3	

* Refer to product datasheet for POD option being used

3 Pin TO-220 (Option 2)*

SYMBOLS	DIMENSIONS IN INCH (Control Unit)		DIMENSIONS IN MM (Reference Unit)	
	MIN	MAX	MIN	MAX
A	0.140	0.190	3.56	4.82
A1	0.020	0.055	0.51	1.40
A2	0.080	0.115	2.03	2.92
b	0.015	0.040	0.38	1.02
c	0.014	0.024	0.36	0.61
D	0.560	0.650	14.22	16.51
D1	0.330	0.355	8.38	9.02
D2	0.480	0.507	12.19	12.88
E	0.380	0.420	9.65	10.67
E1	0.270	0.350	6.86	8.89
e	0.100 BSC		2.54 BSC	
e1	0.200 BSC		5.08 BSC	
H1	0.230	0.270	5.84	6.86
L	0.500	0.580	12.70	14.73
L1	0.345 BSC		8.76 BSC	
P	0.139	0.156	3.53	3.96
Q	0.103	0.113	2.62	2.87
V	0.240 REF		6.10 REF	
q	3°	7°	3°	7°
N	3		3	

* Refer to product datasheet for POD option being used

5 Pin TO-220 JEDEC TS-001 Variation AA

SYMBOLS	DIMENSIONS IN INCH (Control Unit)		DIMENSIONS IN MM (Reference Unit)	
	MIN	MAX	MIN	MAX
A	0.165	0.190	4.19	4.82
A1	0.035	0.055	0.89	1.39
A2	0.085	0.115	2.16	2.92
b	0.020	0.040	0.51	1.01
c	0.012	0.025	0.31	0.63
D	0.570	0.625	14.48	15.87
D1	0.330	0.370	8.39	9.39
E	0.390	0.415	9.91	10.54
e	0.067 BSC		1.70 BSC	
e1	0.263	0.273	6.68	6.93
e3	0.030	0.040	0.76	1.02
L	0.945	1.045	24.00	26.54
L1	0.465	0.539	11.81	13.69
P	0.139	0.156	3.53	3.96
Q	0.103	0.113	2.62	2.87
U	0.300 REF		7.62 REF	
V	0.240 REF		6.10 REF	
q	3°	7°	3°	7°
N	5		5	

Drawing No: POD-00000020

Revision: A

3-Pin TO-252

TO-252 version obsolete

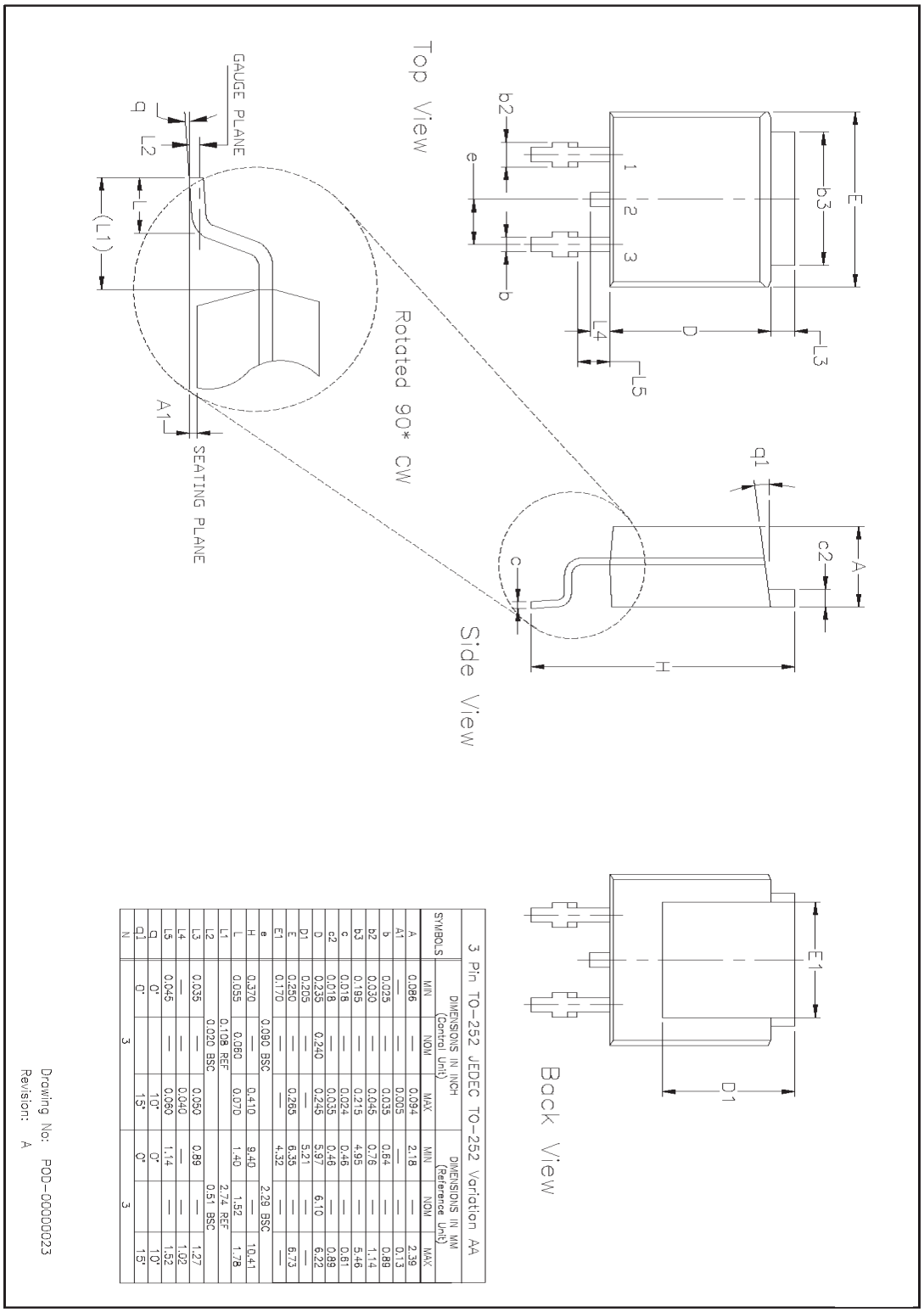

3 Pin TO-252 JEDEC TO-252 Variation AA

SYMBOLS	DIMENSIONS IN INCH (Control Unit) MIN	NOM	MAX	DIMENSIONS IN MM (Reference Unit) MIN	NOM	MAX
A	0.086	—	0.094	2.18	—	2.39
A1	—	—	0.005	—	—	0.13
b	0.025	—	0.035	0.64	—	0.89
b2	0.030	—	0.045	0.76	—	1.14
b3	0.195	—	0.215	4.95	—	5.46
c	0.018	—	0.024	0.46	—	0.61
c2	0.018	—	0.035	0.46	—	0.89
D	0.235	0.240	0.245	5.97	6.10	6.22
D1	0.205	—	—	5.21	—	—
E	0.250	—	0.265	6.35	—	6.73
E1	0.170	—	—	4.32	—	—
e		0.090 BSC			2.29 BSC	
H	0.370	—	0.410	9.40	—	10.41
L	0.055	0.060	0.070	1.40	1.52	1.78
L1		0.108 REF			2.74 REF	
L2		0.020 BSC			0.51 BSC	
L3	0.035	—	0.050	0.89	—	1.27
L4	—	—	0.040	—	—	1.02
L5	0.045	—	0.060	1.14	—	1.52
q	0°	—	10°	0°	—	10°
q1	0°	—	15°	0°	—	15°
N	3			3		

Drawing No: POD-00000023
Revision: A

REVISION HISTORY

Revision	Date	Description
2.0.0	September, 2010	Reformat of datasheet Added marking information
2.0.1	June 26, 2023	**Updated:** ■ In "Features" section, industry standard "LT1085/LT1585" replaced with "LT1587". ■ In "Package Specification" section: ▪ "3-pin TO-263" figure. ▪ "3-pin TO-220" figure. ▪ "3-pin TO-252" figure. **Removed:** ■ In "Ordering Information" table, SPX1587T-L, SPX1587T-L/TR, SPX1587T-L-1-5, SPX1587T-L-1-5/TR, SPX1587T-L-5-0, SPX1587T-L-5-0/TR, SPX1587U-L-3-3, SPX1587U-L-5-0, SPX1587AR-L, SPX1587AR-L/TR, SPX1587AT-L, SPX1587AT-L-2-5, SPX1587AT-L-2-5/TR, SPX1587AT-L-3-3, and SPX1587AU-L obsolete part numbers. Removed also "Marking" column.

MaxLinear, Inc.:
5966 La Place Court Suite 100
Carlsbad, CA 92008
Tel.: +1 (760) 692-0711
Fax: +1 (760) 444-8598
www.maxlinear.com

The content of this document is furnished for informational use only, is subject to change without notice, and should not be construed as a commitment by MaxLinear, Inc. MaxLinear, Inc. assumes no responsibility or liability for any errors or inaccuracies that may appear in the informational content contained in this document. Complying with all applicable copyright laws is the responsibility of the user. Without limiting the rights under copyright, no part of this document may be reproduced into, stored in, or introduced into a retrieval system, or transmitted in any form or by any means (electronic, mechanical, photocopying, recording, or otherwise), or for any purpose, without the express written permission of MaxLinear, Inc.

EXCEPT AS OTHERWISE PROVIDED EXPRESSLY IN WRITING BY MAXLINEAR, AND TO THE MAXIMUM EXTENT PERMITTED BY LAW: (A) THE MAXLINEAR PRODUCTS ARE PROVIDED ON AN "AS IS" BASIS WITHOUT REPRESENTATIONS OR WARRANTIES OF ANY KIND, INCLUDING WITHOUT LIMITATION ANY IMPLIED OR STATUTORY WARRANTIES AND ANY WARRANTIES OF MERCHANTABILITY, FITNESS FOR A PARTICULAR PURPOSE, NON-INFRINGEMENT, OR TITLE; AND (B) MAXLINEAR DOES NOT GUARANTEE THAT THE PRODUCTS WILL BE FREE OF ERRORS OR DEFECTS. MAXLINEAR PRODUCTS SHOULD NOT BE USED IN ANY EMERGENCY, SECURITY, MILITARY, LIFE-SAVING, OR OTHER CRITICAL USE CASE WHERE A FAILURE OR MALFUNCTION COULD CAUSE PERSONAL INJURY OR DEATH, OR DAMAGE TO OR LOSS OF PROPERTY. USERS ASSUME ALL RISK FOR USING THE MAXLINEAR PRODUCTS IN SUCH USE CASE. CUSTOMERS AND USERS ARE SOLELY RESPONSIBLE FOR USING THEIR OWN SKILL AND JUDGMENT TO DETERMINE WHETHER MAXLINEAR PRODUCTS ARE SUITABLE FOR THE INTENDED USE CASE.

MaxLinear, Inc. may have patents, patent applications, trademarks, copyrights, or other intellectual property rights covering subject matter in this document. Except as expressly provided in any written license agreement from MaxLinear, Inc., the furnishing of this document does not give you any license to these patents, trademarks, copyrights, or other intellectual property.

MaxLinear, the MaxLinear logo, any other MaxLinear trademarks (including but not limited to MxL, Full-Spectrum Capture, FSC, AirPHY, Puma, AnyWAN, VectorBoost, MXL WARE, and Panther), and the MaxLinear logo on the products sold are all property of MaxLinear, Inc. or one of MaxLinear's subsidiaries in the U.S.A. and other countries. All rights reserved.

All third-party products, company names and logos are trademarks™ or registered® trademarks and remain the property of their respective holders/owners. Use of such marks does not imply any affiliation with, sponsorship or endorsement by the owners/holders of such trademarks. All references by MaxLinear to third party trademarks are intended to constitute nominative fair use under applicable trademark laws.

The URLs provided are for informational purposes only; they do not constitute an endorsement or an approval by MaxLinear of any of the products or services of the corporation or organization or individual. MaxLinear bears no responsibility for the accuracy, legality or content of the external site or for that of subsequent links. Contact the external site for answers to questions regarding its content.
© 2023 MaxLinear, Inc. All rights reserved.

ENTEGRECİ

Bu belge www.entegreci.com üzerinden sunulmaktadır.

Elektronik komponent tedarikinde Entegreci

Entegreci, Eskişehir merkezli, Türkiye geneline satış yapan bir elektronik komponent mağazasıdır. Entegreler (IC), mikrodenetleyiciler, transistörler, diyotlar, pasif elemanlar, konnektörler, modüller ve geliştirme kartları tek adetten seri üretim adetlerine kadar satılır. Ürün sayfalarında güncel stok durumunu, fiyatı ve datasheet bağlantısını bulabilirsiniz.

Parça koduyla arama

Üretici parça numarasını yazın; stok ve fiyatı hemen görün.

www.entegreci.com

Ürün kategorileri

Entegreden kapasitöre tüm elektronik komponent kategorileri.

Kategorilere göz atın

Üreticiler

Aradığınız üreticinin ürünlerini tek sayfada inceleyin.

Üreticileri görün

Toplu alım ve teklif

Listede olmayan ya da yüksek adetli parçalar için teklif isteyin.

Teklif isteyin

www.entegreci.com | **destek@entegreci.com** | **0850 305 90 34**

Entegreci is an online electronic components store based in Türkiye. Search by manufacturer part number to see stock, prices and datasheets for integrated circuits, microcontrollers, transistors, passive components and connectors, or request a quote for parts that are not listed.

Bu sayfa Entegreci tarafından eklenmiştir. Belgenin önceki sayfaları asıl yayıncısına aittir ve içeriği değiştirilmemiştir; en güncel sürüm için belgenin yayıncısına başvurun.