GENERAL DESCRIPTION

The SPX3940 is a 1A, accurate voltage regulator with a low drop out voltage of 280mV (typical) at 1A.

These regulators are specifically designed for low voltage applications that require a low dropout voltage and a fast transient response. They are fully fault protected against over-current, reverse battery, and positive and negative voltage transients.

The SPX3940 is offered in 3-pin SOT223 and TO-263 packages. For a 3A version, refer to the SPX29300 data sheet.

APPLICATIONS

- **Power Supplies**
- **LCD Monitors**
- **Portable Instrumentation**
- **Medical and Industrial Equipment**

FEATURES

- **Guaranteed 1.5A Peak Current**
- **1% Output Accuracy SPX3940A**
- **Low Quiescent Current**
- **Low Dropout Voltage of 280mV at 1A**
- **Extremely Tight Load and Line Regulation**
- **Extremely Fast Transient Response**
- **Reverse-battery Protection**
- **Internal Thermal Protection**
- **Internal Short Circuit Current Limit**
- **Replacement for LM3940**
- **Standard SOT223 & TO-263 packages**

TYPICAL APPLICATION DIAGRAM

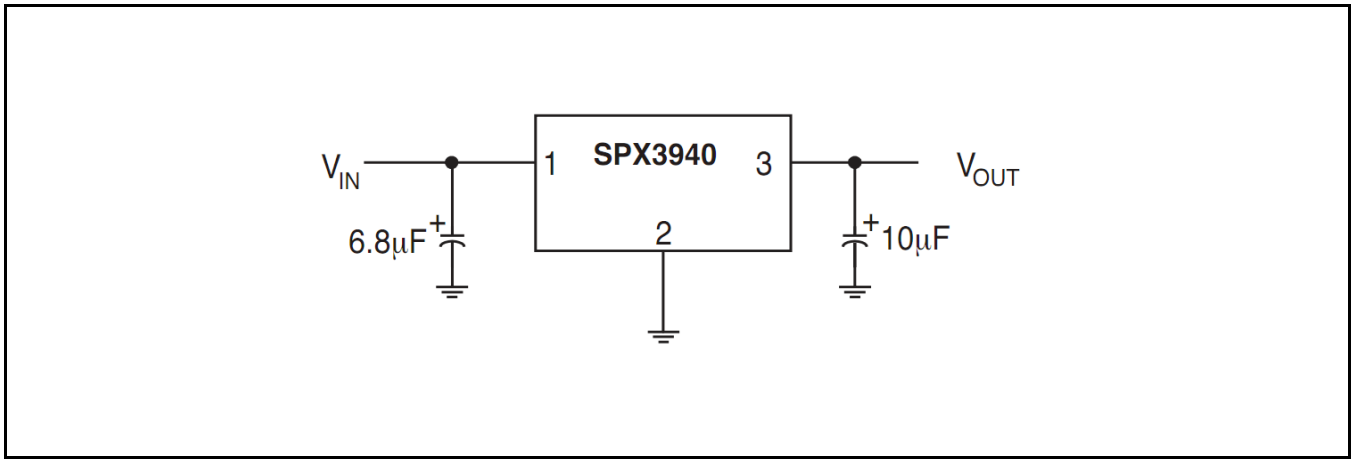

Fig. 1: SPX3940 Application Diagram – Fixed Output Linear Regulator

ABSOLUTE MAXIMUM RATINGS

These are stress ratings only and functional operation of the device at these ratings or any other above those indicated in the operation sections of the specifications below is not implied. Exposure to absolute maximum rating conditions for extended periods of time may affect reliability.

Input Voltage V_{IN} ..... 20V[1]
Storage Temperature ..... -65°C to 150°C
Lead Temperature (Soldering, 5 sec) ..... 260°C

OPERATING RATINGS

Input Voltage V_{IN} 16V
Junction Temperature Range ..... -40°C to 125°C
Packages Thermal Resistance
SOT-223 Junction to Case (at T_A) ..... 15°C/W
SOT-223 Junction to Ambient ..... 62.3°C/W
TO-263 Junction to Case (at T_A) ..... 3°C/W
TO-263 Junction to Ambient ..... 31.4°C/W

Note 1: Maximum positive supply voltage of 20V must be of limited duration (<100ms) and duty cycle (<1%). The maximum continuous supply voltage is 16V.

ELECTRICAL SPECIFICATIONS

Specifications with standard type are for an Operating Ambient Temperature of T_A = 25°C only; limits applying over the full Operating Junction Temperature range are denoted by a "•". Minimum and Maximum limits are guaranteed through test, design, or statistical correlation. Typical values represent the most likely parametric norm at T_A = 25°C, and are provided for reference purposes only. Unless otherwise indicated, V_{IN} = V_{IN} +1V, I_{OUT} = 10mA, C_{IN} = 6.8µF, C_{OUT} = 10µF, T_A = 25°C.

Parameter	Min.	Typ.	Max.	Units		Conditions
1.8V version						
Output Voltage - SPX3940A (1%)	1.782	1.8	1.818	V		I_{OUT}=10mA 10mA≤I_{OUT}≤1A, 6V≤V_{IN}≤16V
	1.755	1.8	1.845		•	
Output Voltage - SPX3940 (2%)	1.764	1.8	1.836	V		
	1.737	1.8	1.863		•	
2.5V version						
Output Voltage - SPX3940A (1%)	2.475	2.5	2.525	V		I_{OUT}=10mA 10mA≤I_{OUT}≤1A, 6V≤V_{IN}≤16V
	2.437	2.5	2.563		•	
Output Voltage - SPX3940 (2%)	2.450	2.5	2.550	V		
	2.412	2.5	2.588		•	
3.3V version						
Output Voltage - SPX3940A (1%)	3.267	3.3	3.333	V		I_{OUT}=10mA 10mA≤I_{OUT}≤1A, 6V≤V_{IN}≤16V
	3.217	3.3	3.383		•	
Output Voltage - SPX3940 (2%)	3.234	3.3	3.366	V		
	3.184	3.3	3.416		•	
5.0V version						
Output Voltage - SPX3940A (1%)	4.950	5.0	5.050	V		I_{OUT}=10mA 10mA≤I_{OUT}≤1A, 6V≤V_{IN}≤16V
	4.875	5.0	5.125		•	
Output Voltage - SPX3940 (2%)	4.900	5.0	5.100	V		
	4.825	5.0	5.175		•	
All Voltage Options						
Line Regulation		0.2	1.0	%		I_{OUT}=10mA, (V_{OUT} +1V)≤V_{IN}≤16V
Load Regulation		0.3	1.5	%		V_{IN} = V_{OUT} +1V,10mA≤I_{OUT}≤1A
$\frac{\Delta V}{\Delta T}$ - Output Voltage temperature Coefficient		20	100	ppm/°C	•	
Dropout Voltage[2] (except 1.8V version)		70	200	mV	•	I_{OUT}=100mA
		280	550	mV	•	I_{OUT}=1A
Ground Current[3]		12	25	mA	•	I_{OUT}=750mA, V_{IN} = V_{OUT} +1V
		18		mA		I_{OUT}=1A
I_{GNDDO} Ground Pin Current at Dropout		1.2		mA		V_{IN} = 0.1V less than specified V_{OUT} I_{OUT}=10mA,
Current Limit	1.5	2.2		A		V_{OUT} = 0V[4]
Output Noise Voltage		400		μV_{RMS}		10Hz-100KHz, I_L=100mA, C_L=10µF
		260		μV_{RMS}		10Hz-100KHz, I_L=100mA, C_L=33µF

Note 2: Dropout voltage is defined as the input to output differential when the output voltage drops to 99% of its normal value.
Note 3: Ground pin current is the regulator quiescent current. The total current drawn from the source is the sum of the load current to the ground current.
Note 4: $V_{IN}=V_{OUT(NOMINAL)}+1V$. For example, use $V_{IN}=4.3V$ for a 3.3V regulator. Employ pulse-testing procedures to minimize temperature rise.

BLOCK DIAGRAM

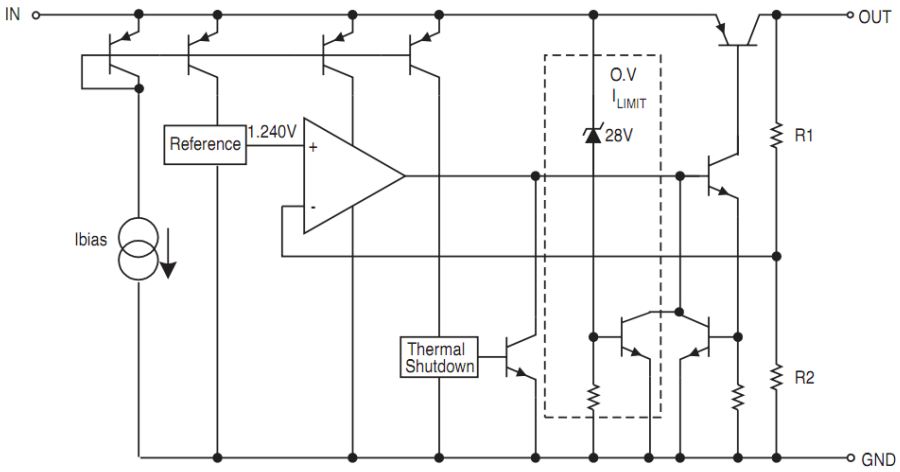

Fig. 2: SPX3940 Block Diagram

PIN ASSIGNMENT

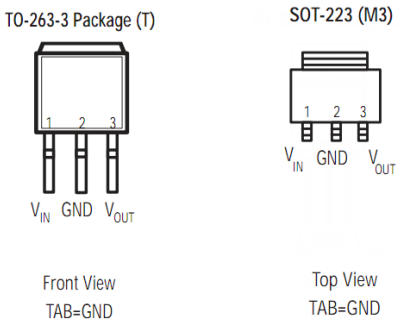

Fig. 3: SPX3940 Pin Assignment

ORDERING INFORMATION

Part Number	Temperature Range	Package	Package Method	Lead Free	Note 2
SPX3940AM3-L-3-3/TR	-40°C≤T_J≤+125°C	3-pin SOT-223	2.5k/Tape & Reel	Yes	3.3V Output Voltage – 1%
SPX3940AM3-L-5-0-TR	-40°C≤T_J≤+125°C	3-pin SOT-223	2.5k/Tape & Reel	Yes	5.0V Output Voltage – 1%
SPX3940AT-L-3-3/TR	-40°C≤T_J≤+125°C	3-pin TO-263	500/Tape & Reel	Yes	3.3V Output Voltage – 1%
SPX3940M3-L-2-5/TR	-40°C≤T_J≤+125°C	3-pin SOT-223	2.5k/Tape & Reel	Yes	2.5V Output Voltage – 2%
SPX3940M3-L-5-0/TR	-40°C≤T_J≤+125°	3-pin SOT-223	2.5k/Tape & Reel	Yes	5.0V Output Voltage – 2%
SPX3940T-L-3-3/TR	-40°C≤T_J≤+125°	3-pin TO-263	500/Tape & Reel	Yes	3.3V Output Voltage – 2%

NOTE: For more information about part numbers, as well as the most up-to-date ordering information and additional information on environment rating, go to www.maxlinear.com/SPX3940

TYPICAL PERFORMANCE CHARACTERISTICS

Schematic and BOM from Application Information section of this datasheet.

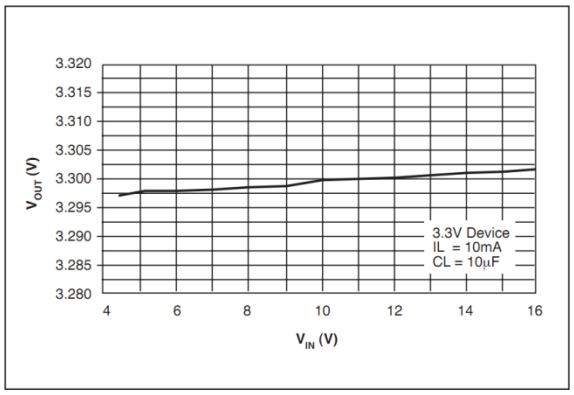

Fig. 4: Line Regulation

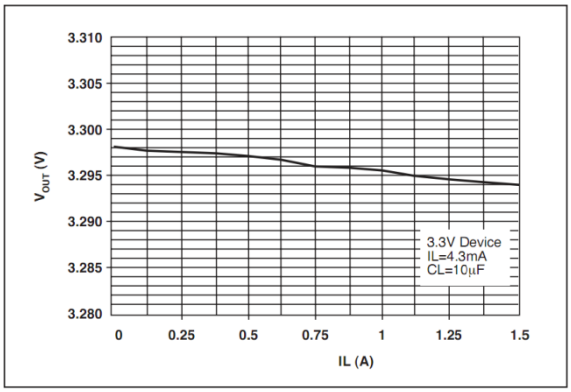

Fig. 5: Load Regulation

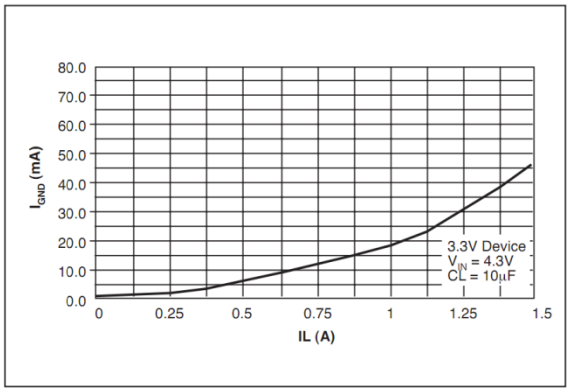

Fig. 6: Ground Current vs Load Current

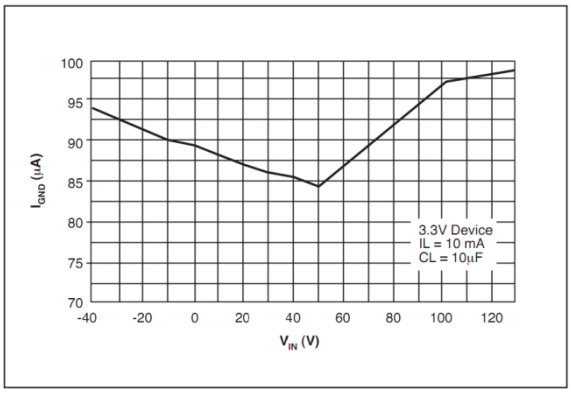

Fig. 7: Ground Current vs Input Voltage

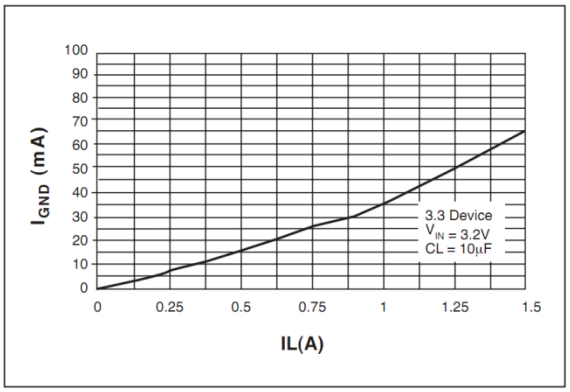

Fig. 8: Ground Current vs Load Current in Dropout

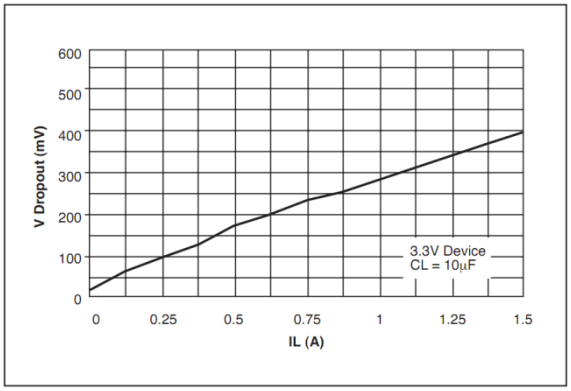

Fig. 9: Dropout Voltage vs Load Current

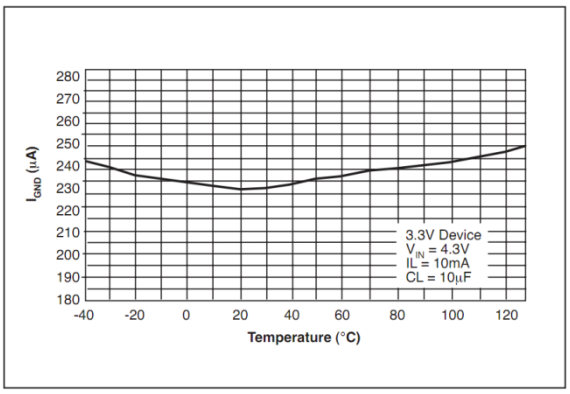

Fig. 10: Ground Current vs Temperature
I_{LOAD}=100mA

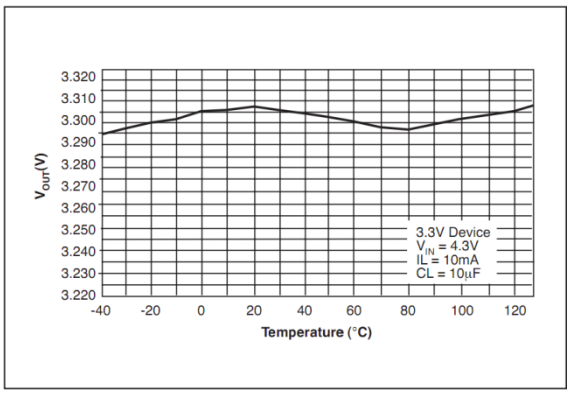

Fig. 11: Output Voltage vs Temperature
I_{LOAD}=100mA

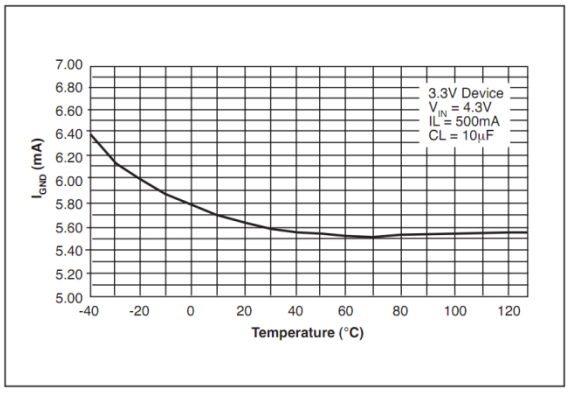

Fig. 12: Ground Current vs Temperature
I_{LOAD}=500mA

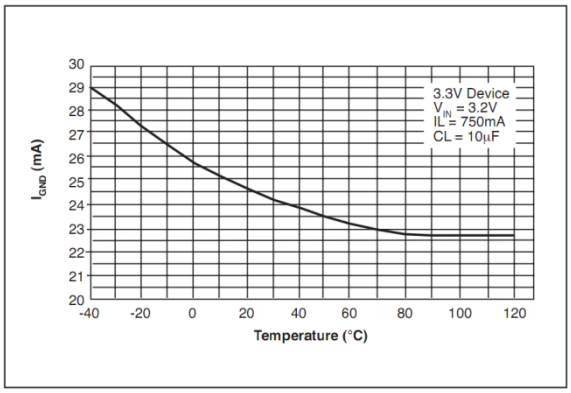

Fig. 13: Ground Current vs Temperature
Dropout, I_{LOAD}=750mA

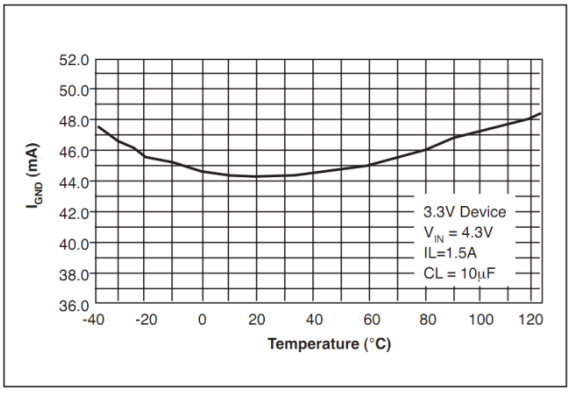

Fig. 14: Ground Current vs Temperature
I_{LOAD}=1.5A

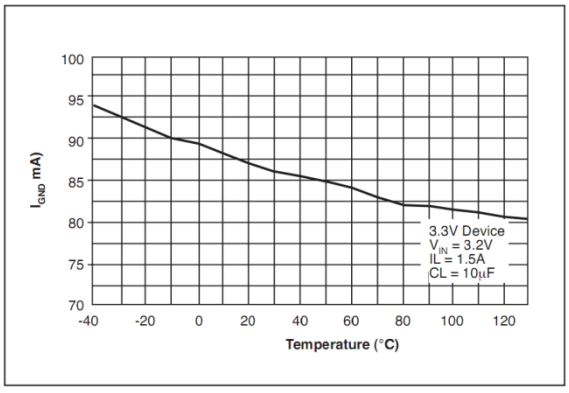

Fig. 15: Ground Current vs Temperature
Dropout, I_{LOAD}=1.5A

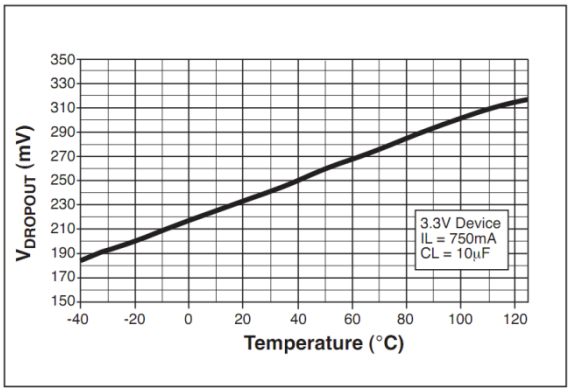

Fig. 16: Dropout Voltage vs Temperature
I_{LOAD}=750mA

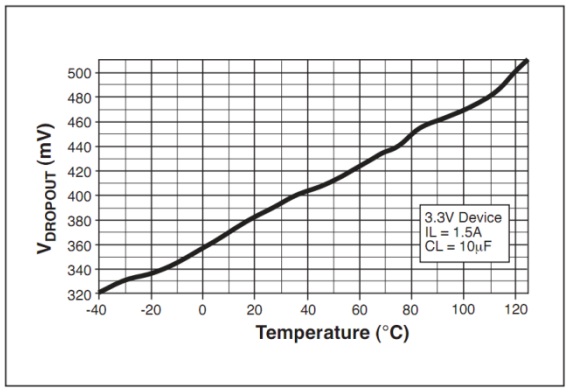

Fig. 17: Dropout Voltage vs Temperature
I_{LOAD}=1.5A

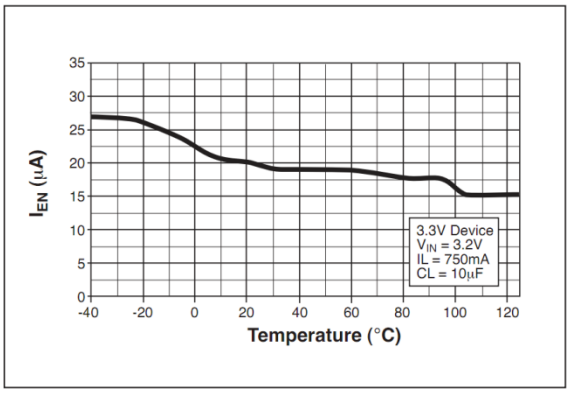

Fig. 18: Enable Current vs Temperature
V_{EN}=16V

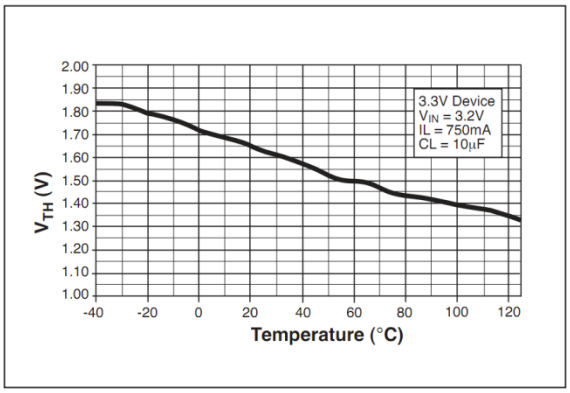

Fig. 19: Enable Threshold vs Temperature

THEORY OF OPERATION

The SPX3940 incorporates protection against over-current faults, reversed load insertion, over temperature operation, and positive and negative transient voltage.

THERMAL CONSIDERATIONS

Although the SPX3940 offers limiting circuitry for overload conditions, it is still necessary to insure that the maximum junction temperature is not exceeded in the application. Heat will flow through the lowest resistance path, the junction-to-case path. In order to insure the best thermal flow of the component, proper mount-ing is required. Consult heatsink manufacturer for thermal resistance and design of heatsink.

TO-220 Design Example:

Assume that V_{IN} = 10V, V_{OUT} = 5V, I_{OUT} = 1.5A, T_A = 50°C/W, θ_{HA}= 1°C/W, θ_{CH} = 2°C/W, and θ_{JC} = 3°C/W.

Where T_A = ambient temperature

θ_{HA} = heatsink to ambient thermal resistance

θ_{CH} = case to heatsink thermal resistance

θ_{JC} = junction to case thermal resistance

The power calculated under these conditions is:

$$P_D = (V_{IN} - V_{OUT}) * I_{OUT} = 7.5W.$$

And the junction temperature is calculated as

$T_J = T_A + P_D * (\theta_{HA} + \theta_{CH} + \theta_{JC})$ or

$T_J = 50 + 7.5 * (1 + 2 + 3) = 95°C$

Reliable operation is insured.

CAPACITOR REQUIREMENTS

The output capacitor is needed to insure stability and minimize the output noise. The value of the capacitor varies with the load. However, a minimum value of 10µF aluminum capacitor will guarantee stability over all load conditions. A tantalum capacitor is recommended if a faster load transient response is needed.

If the power source has a high AC impedance, a 0.1µF ceramic capacitor between input & ground is recommended.

MINIMUM LOAD CURRENT

To ensure a proper behavior of the regulator under light load, a minimum load of 5mA for SPX3940 is required.

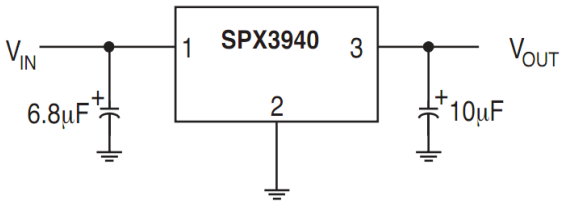

Fig. 20: Fixed Output Linear Regulator

PACKAGE SPECIFICATION

3-PIN SOT-223

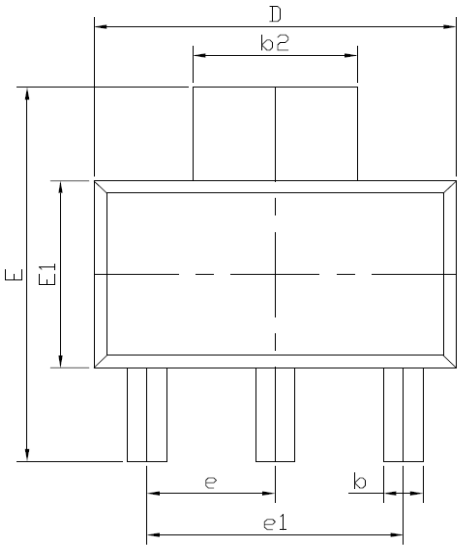

TOP VIEW

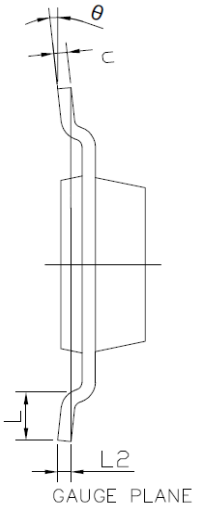

SIDE VIEW 1

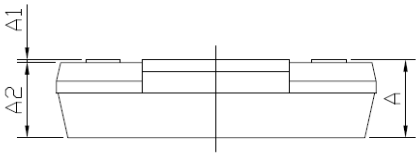

SIDE VIEW 2

DIM / SYMBOL	MIN.	NOM.	MAX.
A	–	–	1.80
A1	0.02	–	0.10
A2	1.50	1.60	1.70
b	0.66	0.76	0.84
b2	2.90	3.00	3.10
c	0.23	0.30	0.35
D	6.30	6.50	6.70
E	6.70	7.00	7.30
E1	3.30	3.50	3.70
e	2.30 BSC		
e1	4.60 BSC		
L	0.75	–	–
L2	0.25 BSC		
θ	0°	–	10°
N	3		

TERMINAL DETAILS

NOTE : ALL DIMENSIONS ARE IN MILLIMETERS, ANGLES ARE IN DEGREES.

Drawing No. : POD-00000098

Revision: D

RECOMMENDED LAND PATTERN AND STENCIL

3-PIN SOT-223

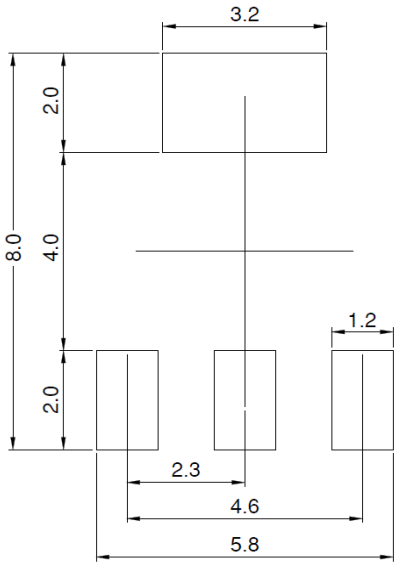

TYPICAL RECOMMENDED LAND PATTERN

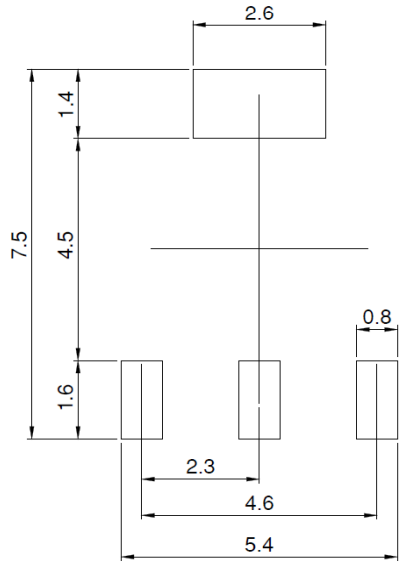

TYPICAL RECOMMENDED STENCIL

NOTE : ALL DIMENSIONS ARE IN MILLIMETERS, ANGLES ARE IN DEGREES.

Drawing No. : POD-00000098

Revision: D

PACKAGE SPECIFICATION

3-PIN TO-263

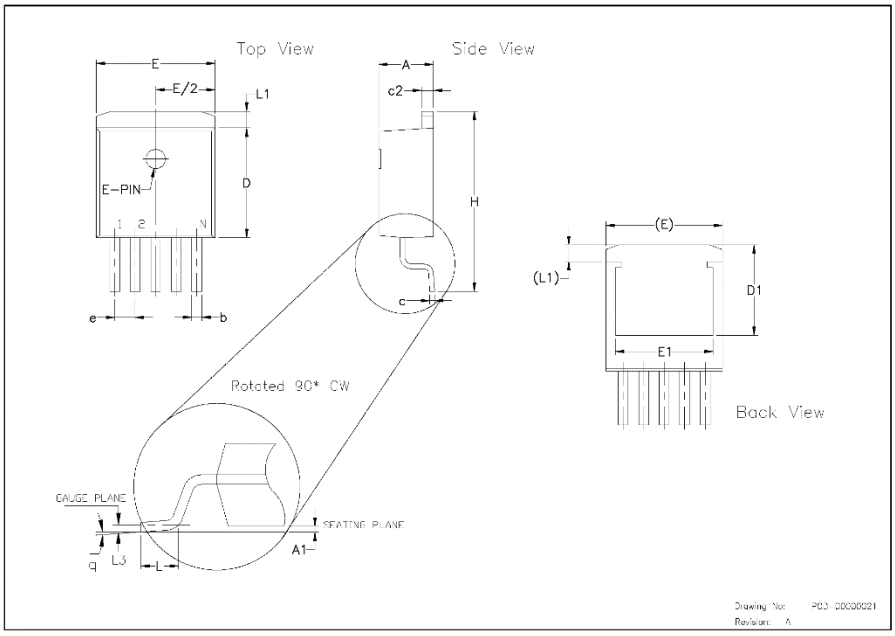

3 Pin TO-263 JEDEC TO-263 Variation AA

SYMBOLS	DIMENSIONS IN INCH (Control Unit)			DIMENSIONS IN MM (Reference Unit)		
	MIN	NOM	MAX	MIN	NOM	MAX
A	0.160	—	0.190	4.06	—	4.83
A1	0.000	—	0.010	0.00	—	0.25
b	0.020	—	0.039	0.51	—	0.99
b2	0.045	—	0.070	1.14	—	1.78
c	0.015	—	0.029	0.38	—	0.74
c2	0.045	—	0.065	1.14	—	1.65
D	0.330	—	0.380	8.38	—	9.65
D1	0.270	—	—	6.86	—	—
E	0.380	—	0.420	9.65	—	10.67
E1	0.245	—	—	6.22	—	—
e	0.100 BSC			2.54 BSC		
H	0.575	—	0.625	14.61	—	15.88
L	0.070	—	0.110	1.78	—	2.79
L1	—	—	0.066	—	—	1.68
L3	0.010 BSC			0.25 BSC		
q	0°		8°	0°		8°
N	3			3		

5 Pin TO-263 JEDEC TO-263 Variation BA

SYMBOLS	DIMENSIONS IN INCH (Control Unit)			DIMENSIONS IN MM (Reference Unit)		
	MIN	NOM	MAX	MIN	NOM	MAX
A	0.160	—	0.190	4.06	—	4.83
A1	0.000	—	0.010	0.00	—	0.25
b	0.020	—	0.039	0.51	—	0.99
c	0.015	—	0.029	0.38	—	0.74
c2	0.045	—	0.065	1.14	—	1.65
D	0.330	—	0.380	8.38	—	9.65
D1	0.270	—	—	6.86	—	—
E	0.380	—	0.420	9.65	—	10.67
E1	0.245	—	—	6.22	—	—
e	0.067 BSC			1.70 BSC		
H	0.575	—	0.625	14.61	—	15.88
L	0.070	—	0.110	1.78	—	2.79
L1	—	—	0.066	—	—	1.68
L3	0.010 BSC			0.25 BSC		
q	0°		8°	0°		8°
N	5			5		

Drawing No: PDD 00000021
Revision: A

REVISION HISTORY

Revision	Date	Description
A	04/14/2006	
1.0.0	02/29/2012	Reformat of Datasheet Package drawing corrections
1.0.1	July 3, 2023	**Updated:** • In "Ordering Information" table, removed SPX3940AM3-L-1-8, SPX3940AM3-L-1-8/TR, SPX3940AM3-L-2-5, SPX3940AM3-L-2-5/TR, SPX3940AM3-L-3-3, SPX3940AM3-L-5-0, SPX3940AT-L-1-8, SPX3940AT-L-1-8/TR, SPX3940AT-L-3-3, SPX3940AT-L-5-0, SPX3940AT-L-5-0/TR, SPX3940M3-L-2-5, SPX3940M3-L-3-3, SPX3940M3-L-3-3/TR, SPX3940M3-L-5-0, SPX3940T-L-3-3, SPX3940T-L-5-0, and SPX3940T-L-5-0/TR obsolete part numbers. • "Package Specification 3-Pin SOT-223" figure. • "Recommended Land Pattern and Stencil 3-Pin SOT-223" figure. • "Package Specification 3-Pin TO-263" figures.
1.0.2	June 23, 2025	**Updated:** • "Package Specification 3-Pin SOT-223" figure from Revision C to Revision D. No change to content; MxL document registration only. • "Recommended land pattern and stencil 3-Pin SOT-223" figure: dimensions corrected.

CORPORATE HEADQUARTERS:
5966 La Place Court
Suite 100
Carlsbad, CA 92008
Tel.: +1 (760) 692-0711
Fax: +1 (760) 444-8598
www.maxlinear.com

The content of this document is furnished for informational use only, is subject to change without notice, and should not be construed as a commitment by MaxLinear, Inc. MaxLinear, Inc. assumes no responsibility or liability for any errors or inaccuracies that may appear in the informational content contained in this document. Complying with all applicable copyright laws is the responsibility of the user. Without limiting the rights under copyright, no part of this document may be reproduced into, stored in, or introduced into a retrieval system, or transmitted in any form or by any means (electronic, mechanical, photocopying, recording, or otherwise), or for any purpose, without the express written permission of MaxLinear, Inc.

EXCEPT AS OTHERWISE PROVIDED EXPRESSLY IN WRITING BY MAXLINEAR, AND TO THE MAXIMUM EXTENT PERMITTED BY LAW: (A) THE MAXLINEAR PRODUCTS ARE PROVIDED ON AN "AS IS" BASIS WITHOUT REPRESENTATIONS OR WARRANTIES OF ANY KIND, INCLUDING WITHOUT LIMITATION ANY IMPLIED OR STATUTORY WARRANTIES AND ANY WARRANTIES OF MERCHANTABILITY, FITNESS FOR A PARTICULAR PURPOSE, NON-INFRINGEMENT, OR TITLE; AND (B) MAXLINEAR DOES NOT GUARANTEE THAT THE PRODUCTS WILL BE FREE OF ERRORS OR DEFECTS. MAXLINEAR PRODUCTS SHOULD NOT BE USED IN ANY EMERGENCY, SECURITY, MILITARY, LIFE-SAVING, OR OTHER CRITICAL USE CASE WHERE A FAILURE OR MALFUNCTION COULD CAUSE PERSONAL INJURY OR DEATH, OR DAMAGE TO OR LOSS OF PROPERTY. USERS ASSUME ALL RISK FOR USING THE MAXLINEAR PRODUCTS IN SUCH USE CASE. CUSTOMERS AND USERS ARE SOLELY RESPONSIBLE FOR USING THEIR OWN SKILL AND JUDGMENT TO DETERMINE WHETHER MAXLINEAR PRODUCTS ARE SUITABLE FOR THE INTENDED USE CASE.

MaxLinear, Inc. may have patents, patent applications, trademarks, copyrights, or other intellectual property rights covering subject matter in this document. Except as expressly provided in any written license agreement from MaxLinear, Inc., the furnishing of this document does not give you any license to these patents, trademarks, copyrights, or other intellectual property.

MaxLinear, the MaxLinear logo, any other MaxLinear trademarks (including but not limited to MxL, Full-Spectrum Capture, FSC, AirPHY, Puma, AnyWAN, VectorBoost, MXL WARE, and Panther), and the MaxLinear logo on the products sold are all property of MaxLinear, Inc. or one of MaxLinear's subsidiaries in the U.S.A. and other countries. All rights reserved.

All third-party products, company names and logos are trademarks™ or registered® trademarks and remain the property of their respective holders/owners. Use of such marks does not imply any affiliation with, sponsorship or endorsement by the owners/holders of such trademarks. All references by MaxLinear to third party trademarks are intended to constitute nominative fair use under applicable trademark laws.

The URLs provided are for informational purposes only; they do not constitute an endorsement or an approval by MaxLinear of any of the products or services of the corporation or organization or individual. MaxLinear bears no responsibility for the accuracy, legality or content of the external site or for that of subsequent links. Contact the external site for answers to questions regarding its content.

© 2025 Maxlinear, Inc. All rights reserved.

ENTEGRECİ

Bu belge www.entegreci.com üzerinden sunulmaktadır.

Elektronik komponent tedarikinde Entegreci

Entegreci, Eskişehir merkezli, Türkiye geneline satış yapan bir elektronik komponent mağazasıdır. Entegreler (IC), mikrodenetleyiciler, transistörler, diyotlar, pasif elemanlar, konnektörler, modüller ve geliştirme kartları tek adetten seri üretim adetlerine kadar satılır. Ürün sayfalarında güncel stok durumunu, fiyatı ve datasheet bağlantısını bulabilirsiniz.

Parça koduyla arama

Üretici parça numarasını yazın; stok ve fiyatı hemen görün.

www.entegreci.com

Ürün kategorileri

Entegreden kapasitöre tüm elektronik komponent kategorileri.

Kategorilere göz atın

Üreticiler

Aradığınız üreticinin ürünlerini tek sayfada inceleyin.

Üreticileri görün

Toplu alım ve teklif

Listede olmayan ya da yüksek adetli parçalar için teklif isteyin.

Teklif isteyin

www.entegreci.com | **destek@entegreci.com** | **0850 305 90 34**

Entegreci is an online electronic components store based in Türkiye. Search by manufacturer part number to see stock, prices and datasheets for integrated circuits, microcontrollers, transistors, passive components and connectors, or request a quote for parts that are not listed.

Bu sayfa Entegreci tarafından eklenmiştir. Belgenin önceki sayfaları asıl yayıncısına aittir ve içeriği değiştirilmemiştir; en güncel sürüm için belgenin yayıncısına başvurun.