# TLV702-Q1 300-mA, Low-$I_Q$, Low-Dropout Regulator

## 1 Features

- Qualified for Automotive Applications
- AEC-Q100 Qualified with the Following Results:
  - Device Temperature Grade 1: –40°C to 125°C Ambient Operating Temperature Range
  - Device HBM ESD Classification Level H2
  - Device CDM ESD Classification Level C4B
- Very Low Dropout:
  - 37 mV at $I_{OUT}$ = 50 mA, $V_{OUT}$ = 2.8 V
  - 75 mV at $I_{OUT}$ = 100 mA, $V_{OUT}$ = 2.8 V
  - 220 mV at $I_{OUT}$ = 300 mA, $V_{OUT}$ = 2.8 V
- 2% Accuracy Over Temperature
- Low $I_Q$: 35 µA
- Fixed-Output Voltage Combinations Possible from 1.2 V to 4.8 V
- High PSRR: 68 dB at 1 kHz
- Stable with Effective Capacitance of 0.1 µF(1)
- Thermal Shutdown and Overcurrent Protection
- Packages: 5-Pin SOT (DBV and DDC) and 1.5-mm × 1.5-mm, 6-Pin WSON

(1) See the *Input and Output Capacitor Requirements* in the *Application Information* section.

## 2 Applications

- Automotive Camera Modules
- Image Sensor Power
- Microprocessor Rails
- Automotive Infotainment Head Units
- Automotive Body Electronics

## 3 Description

The TLV702-Q1 series of low-dropout (LDO) linear regulators are low quiescent current devices with excellent line and load transient performance. These LDOs are designed for power-sensitive applications.

A precision bandgap and an error amplifier provide overall 2% accuracy. Low output noise, very high power-supply rejection ratio (PSRR), and low-dropout voltage make this series of devices ideal for a wide selection of battery-operated equipment. All device versions have thermal shutdown and current limit protections for safety.

Furthermore, these devices are stable with an effective output capacitance of only 0.1 µF. This feature enables the use of cost-effective capacitors that have higher bias voltages and temperature derating. The devices regulate to specified accuracy with no output load.

The TLV702-Q1 series of LDO linear regulators is available in SOT and WSON packages.

**Device Information(1)**

| PART NUMBER | PACKAGE | BODY SIZE (NOM) |
|---|---|---|
| TLV702-Q1 | SOT (5) | 2.90 mm × 1.60 mm |
| | WSON (6) | 1.50 mm × 1.50 mm |

(1) For all available packages, see the package option addendum at the end of the data sheet.

**Typical Application**

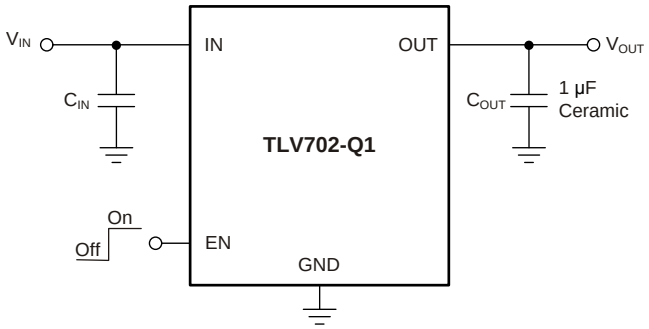


An IMPORTANT NOTICE at the end of this data sheet addresses availability, warranty, changes, use in safety-critical applications, intellectual property matters and other important disclaimers. PRODUCTION DATA.

# Table of Contents

1 Features ... 1
2 Applications ... 1
3 Description ... 1
4 Revision History ... 2
5 Pin Configuration and Functions ... 4
6 Specifications ... 5
6.1 Absolute Maximum Ratings ... 5
6.2 ESD Ratings ... 5
6.3 Recommended Operating Conditions ... 5
6.4 Thermal Information ... 5
6.5 Electrical Characteristics ... 6
6.6 Typical Characteristics ... 7
7 Detailed Description ... 11
7.1 Overview ... 11
7.2 Functional Block Diagrams ... 11
7.3 Feature Description ... 11
7.4 Device Functional Modes ... 12
8 Application and Implementation ... 13
8.1 Application Information ... 13
8.2 Typical Application ... 13
9 Power Supply Recommendations ... 15
9.1 Power Dissipation ... 15
10 Layout ... 15
10.1 Layout Guidelines ... 15
10.2 Layout Examples ... 16
11 Device and Documentation Support ... 17
11.1 Device Support ... 17
11.2 Documentation Support ... 17
11.3 Receiving Notification of Documentation Updates 17
11.4 Community Resources ... 17
11.5 Trademarks ... 17
11.6 Electrostatic Discharge Caution ... 17
11.7 Glossary ... 18
12 Mechanical, Packaging, and Orderable Information ... 18

## 4 Revision History

NOTE: Page numbers for previous revisions may differ from page numbers in the current version.

**Changes from Revision C (January 2018) to Revision D** — **Page**

- Changed OUT pin number from 5 to 3 in DSE column of *Pin Functions* table ... 4
- Added footnote to maximum EN voltage specification ... 5
- Added parameter names to *Recommended Operating Conditions* table ... 5

**Changes from Revision B (June 2015) to Revision C** — **Page**

- Added DBV package to document ... 1
- Changed *Packages* Features bullet to include DBV package ... 1
- Added DBV package to *Pin Configuration and Functions* section ... 4
- Added DBV column to *Thermal Information* table ... 5
- Changed title of *Layout Example for the DDC and DBV Packages* figure to include DBV package ... 16

**Changes from Revision A (August 2013) to Revision B** — **Page**

- Added DSE (6-Pin WSON) package to data sheet ... 1
- Added *Device Information*, *ESD Ratings*, and *Recommended Operating Conditions* tables, and *Detailed Description*, *Application and Implementation*, *Power Supply Recommendations*, *Layout*, *Device and Documentation Support*, and *Mechanical, Packaging, and Orderable Information* sections to data sheet ... 1
- Deleted all references to P version of device throughout data sheet ... 1
- Added "Over Temperature" to 2% accuracy *Features* bullet ... 1
- Changed DDC package name from TSOT23 to SOT throughout data sheet ... 1
- Changed *Applications* bullets ... 1
- Changed *Description* section text ... 1
- Changed ceramic capacitor units on *Typical Application* circuit from mF to µF (typo) ... 1
- Changed "free-air temperature" to "junction temperature" in *Absolute Maximum Ratings* condition statement ... 5
- Added $T_J$ to $T_A$ condition in *Electrical Characteristics* condition statement ... 6


Copyright © 2013–2019, Texas Instruments Incorporated

- Changed $T_A$ to $T_J$ for typical values in *Electrcial Characteristics* condition statement ..... 6

Copyright © 2013–2019, Texas Instruments Incorporated

# 5 Pin Configuration and Functions

**DDC and DBV Package**
**5-pin SOT**
**Top View**

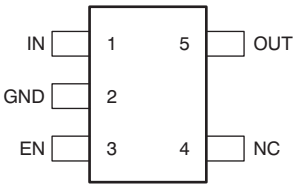


**DSE Package**
**6-Pin WSON**
**Top View**

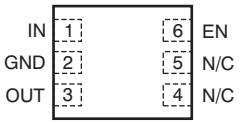


**Pin Functions**

| PIN | | | I/O | DESCRIPTION |
|---|---|---|---|---|
| NAME | DDC, DBV (SOT) | DSE (WSON) | | |
| IN | 1 | 1 | I | Input pin. A small, 1-μF ceramic capacitor is recommended from this pin to ground to assure stability and good transient performance. See *Input and Output Capacitor Requirements* in the *Application Information* section for more details. |
| GND | 2 | 2 | — | Ground pin |
| EN | 3 | 6 | I | Enable pin. Driving EN over 0.9 V turns on the regulator. Driving EN below 0.4 V puts the regulator into shutdown mode and reduces operating current to 1 μA, nominal. |
| NC | 4 | 4, 5 | — | No connection. Tie this pin to ground to improve thermal dissipation. |
| OUT | 5 | 3 | O | Regulated output voltage pin. A small, 1-μF ceramic capacitor is needed from this pin to ground for stability. See *Input and Output Capacitor Requirements* in the *Application Information* section for more details. |


Copyright © 2013–2019, Texas Instruments Incorporated

# 6 Specifications

## 6.1 Absolute Maximum Ratings

over operating junction temperature range (unless otherwise noted)(1)

| | | MIN | MAX | UNIT |
|---|---|---|---|---|
| Voltage(2) | IN | –0.3 | 6 | V |
| | EN | –0.3 | 6(3) | V |
| | OUT | –0.3 | 6 | V |
| Current (source) | OUT | Internally limited | | A |
| Output short-circuit duration | | Indefinite | | |
| Temperature | Operating virtual junction, $T_J$ | –55 | 150 | °C |
| | Storage, $T_{stg}$ | –55 | 150 | °C |

(1) Stresses beyond those listed under *Absolute Maximum Ratings* may cause permanent damage to the device. These are stress ratings only, which do not imply functional operation of the device at these or any other conditions beyond those indicated under *Recommended Operating Conditions*. Exposure to absolute-maximum-rated conditions for extended periods may affect device reliability.
(2) All voltages are with respect to network ground terminal.
(3) The absolute maximum rating is $V_{IN}$ + 0.3 V or 6.0 V, whichever is smaller.

## 6.2 ESD Ratings

| | | | VALUE | UNIT |
|---|---|---|---|---|
| $V_{(ESD)}$ | Electrostatic discharge | Human-body model (HBM), per AEC Q100-002(1) | ±2000 | V |
| | | Charged-device model (CDM), per AEC Q100-011 | ±750 | |

(1) AEC Q100-002 indicates that HBM stressing shall be in accordance with the ANSI/ESDA/JEDEC JS-001 specification.

## 6.3 Recommended Operating Conditions

over operating free-air temperature range (unless otherwise noted)

| | | MIN | NOM | MAX | UNIT |
|---|---|---|---|---|---|
| $V_{IN}$ | Input voltage | 2 | | 5.5 | V |
| $V_{OUT}$ | Output voltage | 1.2 | | 4.8 | V |
| $I_{OUT}$ | Output current | 0 | | 300 | mA |
| $T_A$ | Ambient temperature | –40 | | 125 | °C |
| $T_J$ | Operating virtual junction temperature | –40 | | 125 | °C |

## 6.4 Thermal Information

| THERMAL METRIC(1) | | TLV702-Q1 | | | UNIT |
|---|---|---|---|---|---|
| | | DDC (SOT) | DBV (SOT) | DSE (WSON) | |
| | | 5 PINS | 5 PINS | 6 PINS | |
| $R_{\theta JA}$ | Junction-to-ambient thermal resistance | 262.8 | 249.2 | 321.3 | °C/W |
| $R_{\theta JC(top)}$ | Junction-to-case (top) thermal resistance | 68.2 | 136.4 | 207.9 | °C/W |
| $R_{\theta JB}$ | Junction-to-board thermal resistance | 81.6 | 85.9 | 281.5 | °C/W |
| $\psi_{JT}$ | Junction-to-top characterization parameter | 1.1 | 19.5 | 42.4 | °C/W |
| $\psi_{JB}$ | Junction-to-board characterization parameter | 80.9 | 85.3 | 284.8 | °C/W |
| $R_{\theta JC(bot)}$ | Junction-to-case (bottom) thermal resistance | N/A | N/A | 142.3 | °C/W |

(1) For more information about traditional and new thermal metrics, see the *Semiconductor and IC Package Thermal Metrics* application report.

Copyright © 2013–2019, Texas Instruments Incorporated

## 6.5 Electrical Characteristics

At $V_{IN}$ = $V_{OUT(nom)}$ + 0.5 V or 2 V (whichever is greater); $I_{OUT}$ = 10 mA, $V_{EN}$ = 0.9 V, $C_{OUT}$ = 1 µF, and $T_J$, $T_A$ = –40°C to +125°C, unless otherwise noted. Typical values are at $T_J$ = 25°C.

| PARAMETER | | TEST CONDITIONS | MIN | TYP | MAX | UNIT |
|---|---|---|---|---|---|---|
| | DC output accuracy | | –2% | 0.5% | 2% | |
| $\Delta V_{O(\Delta VI)}$ | Line regulation | $V_{OUT(nom)}$ + 0.5 V ≤ $V_{IN}$ ≤ 5.5 V, $I_{OUT}$ = 10 mA | | 1 | 5 | mV |
| $\Delta V_{O(\Delta IO)}$ | Load regulation | 0 mA ≤ $I_{OUT}$ ≤ 300 mA | | 1 | 15 | mV |
| $V_{DO}$ | Dropout voltage(1) | $V_{IN}$ = 0.98 × $V_{OUT(nom)}$, $I_{OUT}$ = 300 mA | | 260 | 375 | mV |
| $I_{CL}$ | Output current limit | $V_{OUT}$ = 0.9 × $V_{OUT(nom)}$ | 320 | 500 | 860 | mA |
| $I_{GND}$ | Ground pin current | $I_{OUT}$ = 0 mA | | 35 | 55 | µA |
| | | $I_{OUT}$ = 300 mA, $V_{IN}$ = $V_{OUT}$ + 0.5 V | | 370 | | µA |
| $I_{SHDN}$ | Ground pin current (shutdown) | $V_{EN}$ ≤ 0.4 V, $V_{IN}$ = 2 V | | 400 | | nA |
| | | $V_{EN}$ ≤ 0.4 V, 2 V ≤ $V_{IN}$ ≤ 4.5 V | | 1 | 2.5 | µA |
| PSRR | Power-supply rejection ratio | $V_{IN}$ = 2.3 V, $V_{OUT}$ = 1.8 V, $I_{OUT}$ = 10 mA, f = 1 kHz | | 68 | | dB |
| $V_n$ | Output noise voltage | BW = 100 Hz to 100 kHz, $V_{IN}$ = 2.3 V, $V_{OUT}$ = 1.8 V, $I_{OUT}$ = 10 mA | | 48 | | $\mu V_{RMS}$ |
| $t_{STR}$ | Start-up time(2) | $C_{OUT}$ = 1 µF, $I_{OUT}$ = 300 mA | | 100 | | µs |
| $V_{EN(high)}$ | Enable pin high (enabled) | | 0.9 | | $V_{IN}$ | V |
| $V_{EN(low)}$ | Enable pin low (disabled) | | 0 | | 0.4 | V |
| $I_{EN}$ | Enable pin current | $V_{IN}$ = $V_{EN}$ = 5.5 V | | 0.04 | | µA |
| UVLO | Undervoltage lockout | $V_{IN}$ rising | | 1.9 | | V |
| $T_{sd}$ | Thermal shutdown temperature | Shutdown, temperature increasing | | 165 | | °C |
| | | Reset, temperature decreasing | | 145 | | °C |

(1) $V_{DO}$ is measured for devices with $V_{OUT(nom)}$ ≥ 2.35 V.
(2) Start-up time = time from EN assertion to 0.98 × $V_{OUT(nom)}$.


Copyright © 2013–2019, Texas Instruments Incorporated

## 6.6 Typical Characteristics

Over operating temperature range ($T_J$ = –40°C to +125°C), $V_{IN}$ = $V_{OUT(nom)}$ + 0.5 V or 2 V, whichever is greater; $I_{OUT}$ = 10 mA, $V_{EN}$ = $V_{IN}$, $C_{OUT}$ = 1 µF, unless otherwise noted. Typical values are at $T_J$ = 25°C.

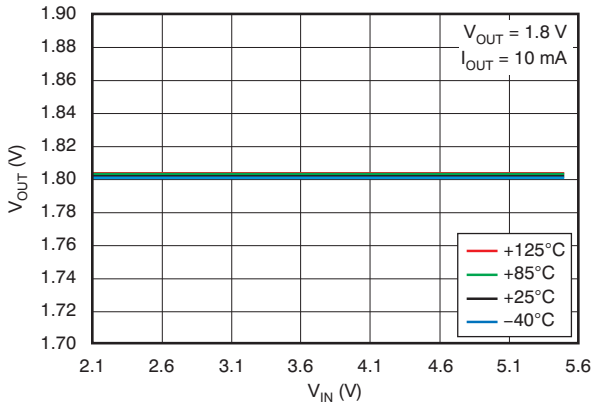


**Figure 1. Line Regulation**

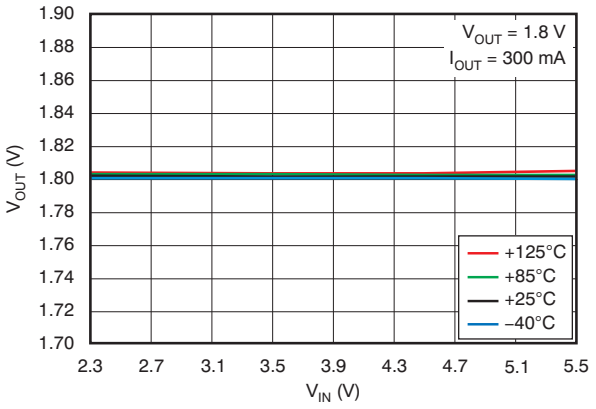


**Figure 2. Line Regulation**

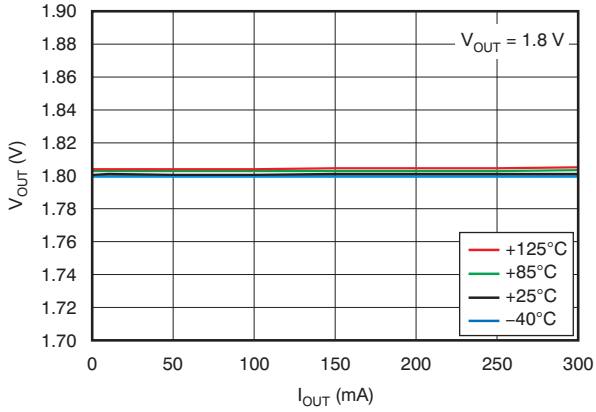


**Figure 3. Load Regulation**

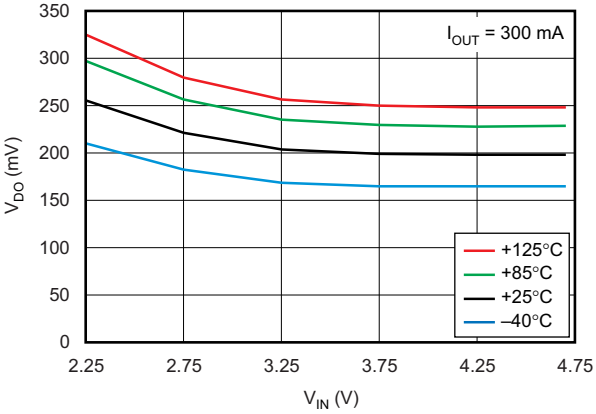


**Figure 4. Dropout Voltage vs Input Voltage**

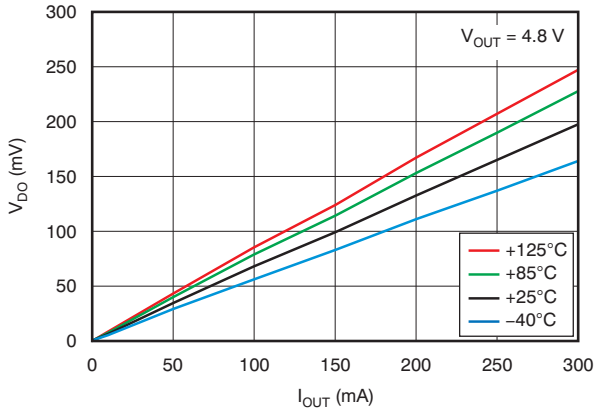


**Figure 5. Dropout Voltage vs Output Current**

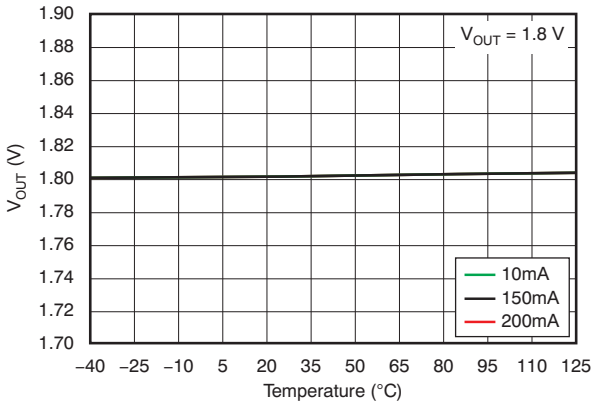


**Figure 6. Output Voltage vs Temperature**

Copyright © 2013–2019, Texas Instruments Incorporated

## Typical Characteristics (continued)

Over operating temperature range ($T_J$ = –40°C to +125°C), $V_{IN}$ = $V_{OUT(nom)}$ + 0.5 V or 2 V, whichever is greater; $I_{OUT}$ = 10 mA, $V_{EN}$ = $V_{IN}$, $C_{OUT}$ = 1 µF, unless otherwise noted. Typical values are at $T_J$ = 25°C.

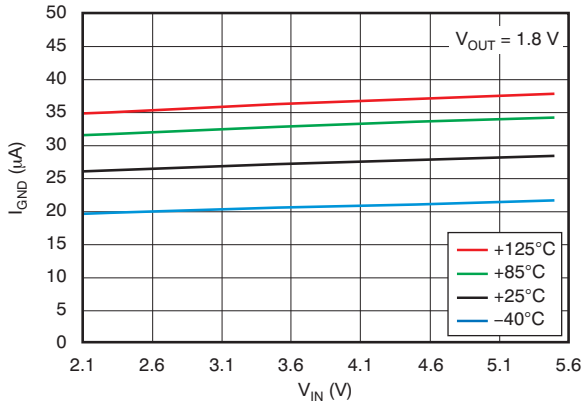


**Figure 7. Ground Pin Current vs Input Voltage**

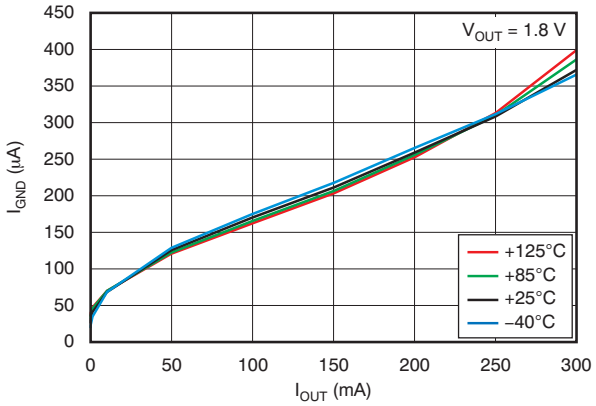


**Figure 8. Ground Pin Current vs Load**

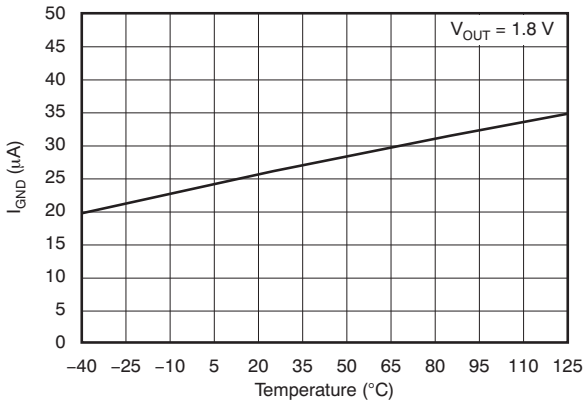


**Figure 9. Ground Pin Current vs Temperature**

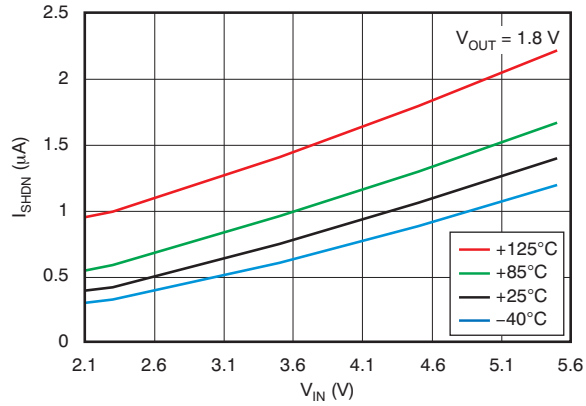


**Figure 10. Shutdown Current vs Input Voltage**

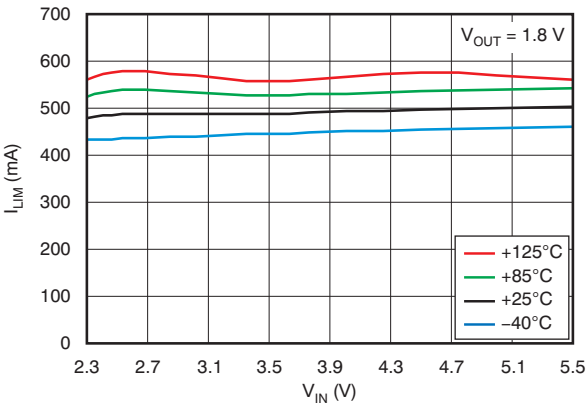


**Figure 11. Current Limit vs Input Voltage**

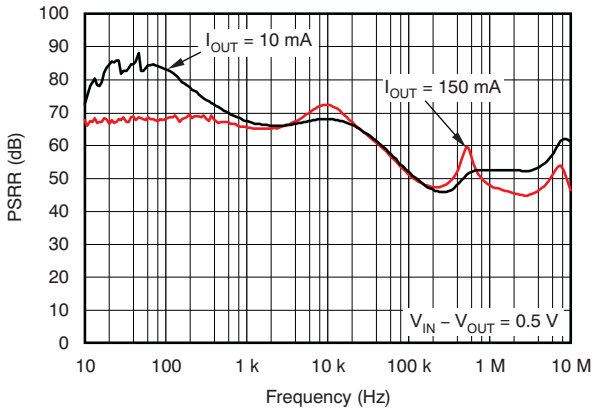


**Figure 12. Power-Supply Ripple Rejection vs Frequency**


Copyright © 2013–2019, Texas Instruments Incorporated

## Typical Characteristics (continued)

Over operating temperature range ($T_J$ = –40°C to +125°C), $V_{IN}$ = $V_{OUT(nom)}$ + 0.5 V or 2 V, whichever is greater; $I_{OUT}$ = 10 mA, $V_{EN}$ = $V_{IN}$, $C_{OUT}$ = 1 µF, unless otherwise noted. Typical values are at $T_J$ = 25°C.

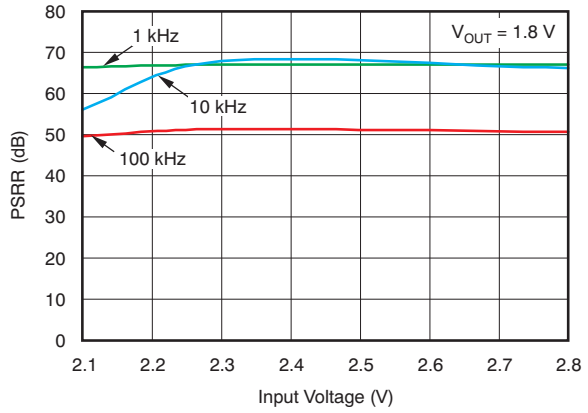


**Figure 13. Power-Supply Ripple Rejection vs Input Voltage**

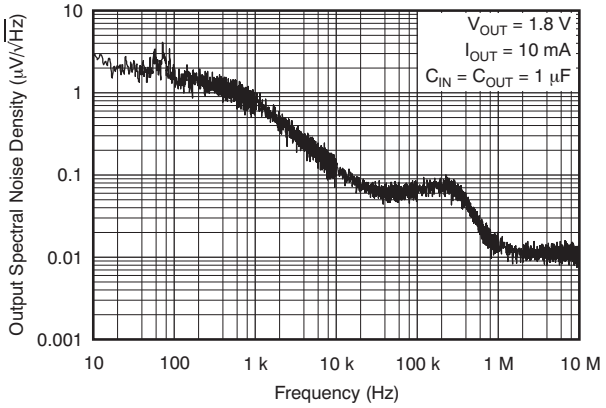


**Figure 14. Output Spectral Noise Density vs Frequency**

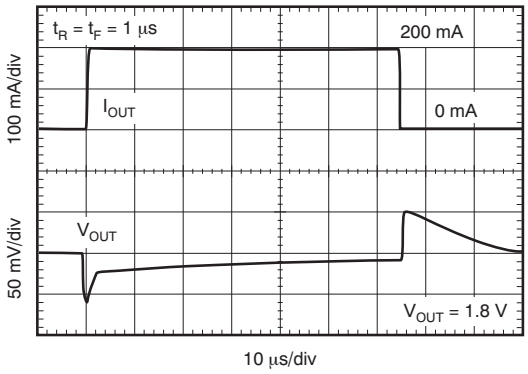


**Figure 15. Load Transient Response**

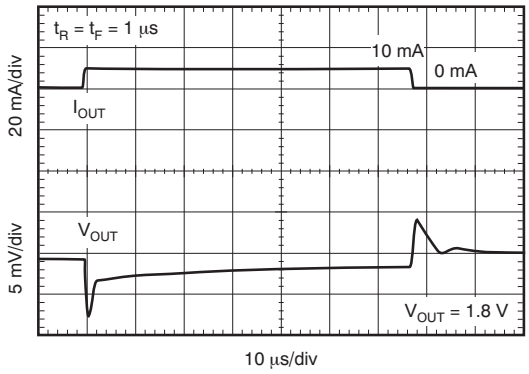


**Figure 16. Load Transient Response**

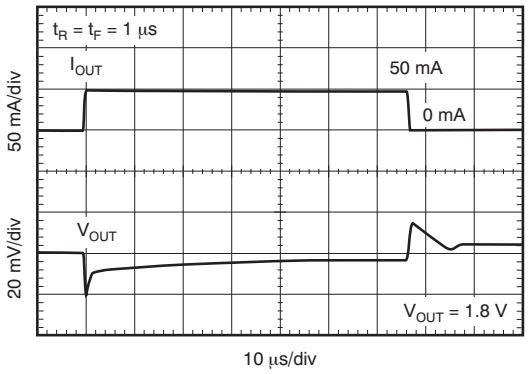


**Figure 17. Load Transient Response**

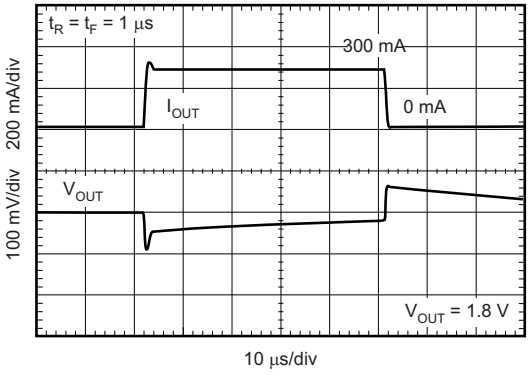


**Figure 18. Load Transient Response**

## Typical Characteristics (continued)

Over operating temperature range ($T_J$ = –40°C to +125°C), $V_{IN}$ = $V_{OUT(nom)}$ + 0.5 V or 2 V, whichever is greater; $I_{OUT}$ = 10 mA, $V_{EN}$ = $V_{IN}$, $C_{OUT}$ = 1 µF, unless otherwise noted. Typical values are at $T_J$ = 25°C.

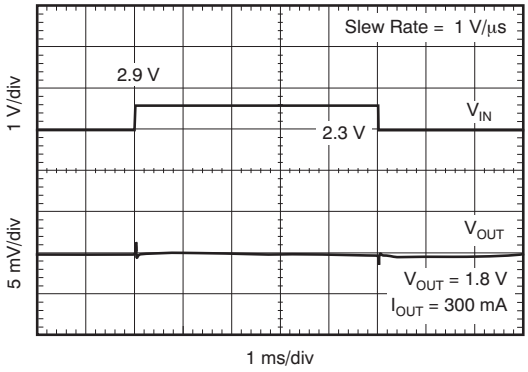


**Figure 19. Line Transient Response**

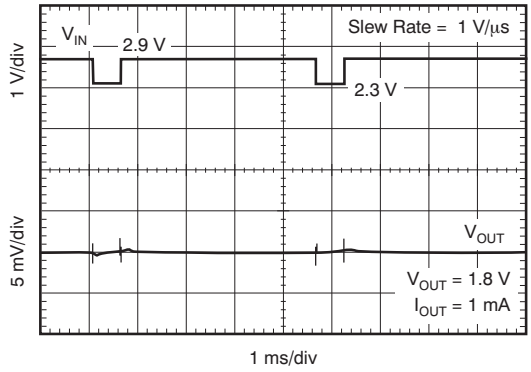


**Figure 20. Line Transient Response**

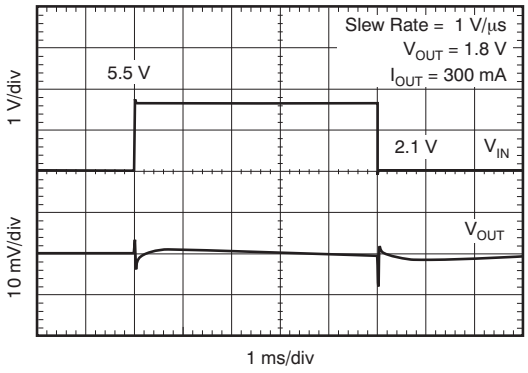


**Figure 21. Line Transient Response**

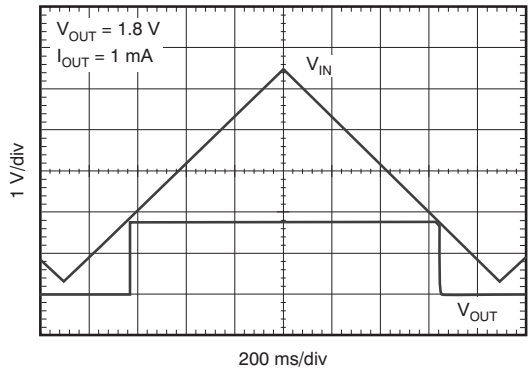


**Figure 22. $V_{IN}$ Ramp Up, Ramp Down Response**


Copyright © 2013–2019, Texas Instruments Incorporated

# 7 Detailed Description

## 7.1 Overview

The TLV702-Q1 series of low-dropout (LDO) linear regulators are low quiescent current devices with excellent line and load transient performance. These LDOs are designed for power-sensitive applications. A precision bandgap and error amplifier provides overall 2% accuracy. Low output noise, very high power-supply rejection ratio (PSRR), and low dropout voltage make this series of devices ideal for most battery-operated handheld equipment. All device versions have integrated thermal shutdown, current limit, and undervoltage lockout (UVLO) protections.

## 7.2 Functional Block Diagrams

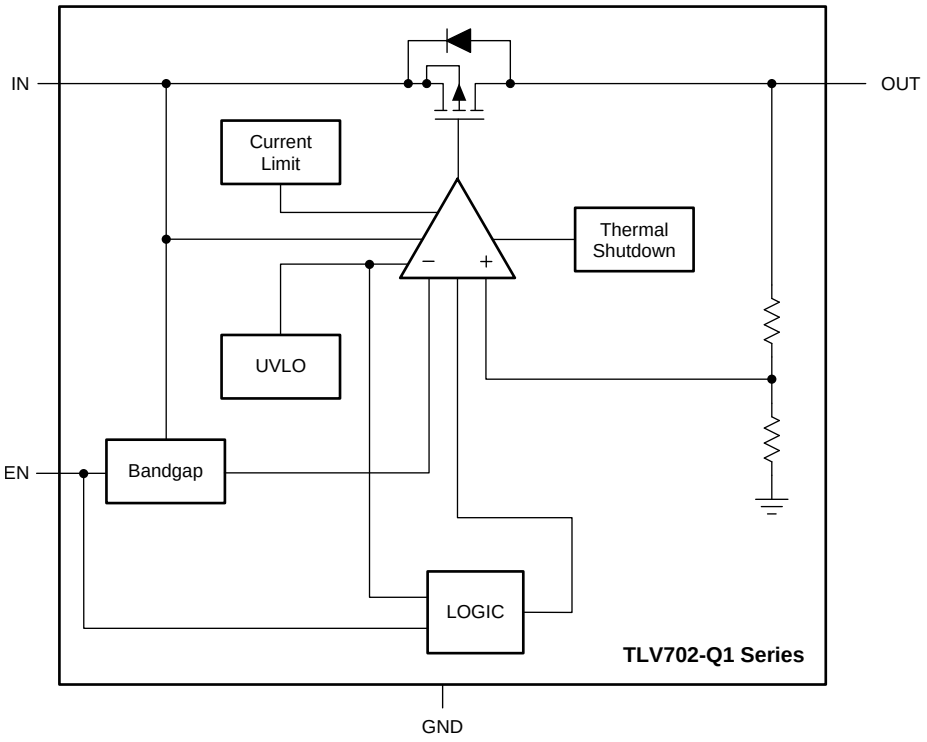


**Figure 23. TLV702-Q1 Block Diagram**

## 7.3 Feature Description

### 7.3.1 Internal Current Limit

The TLV702-Q1 internal current limit protection helps to protect the regulator during fault conditions. During current limit operation, the output sources a fixed amount of current that is largely independent of the output voltage. In such a case, the output voltage is not regulated, and is $V_{OUT} = I_{CL} \times R_{LOAD}$. The PMOS pass transistor dissipates $(V_{IN} – V_{OUT}) \times I_{CL}$ until thermal shutdown is triggered and the device turns off. As the device cools, the device is turned on by the internal thermal shutdown circuit. If the fault condition continues, the device cycles between current limit operation and thermal shutdown. See *Thermal Consideration* for more details.

The PMOS pass element in the TLV702-Q1 has a built-in body diode that conducts current when the voltage at the OUT pin exceeds the voltage at IN. This current is not limited; if extended reverse-voltage operation is anticipated, externally limit the output current to 5% of the rated $I_{OUT}$ specification.

Copyright © 2013–2019, Texas Instruments Incorporated

## Feature Description (continued)

### 7.3.2 Shutdown

The enable pin (EN) is active high. The device is enabled when voltage at EN pin exceeds 0.9 V. The device is turned off when the EN pin is held at less than 0.4 V. When shutdown capability is not required, connect the EN pin to the IN pin.

### 7.3.3 Dropout Voltage

The TLV702-Q1 uses a PMOS pass transistor to achieve low dropout. When ($V_{IN}$ – $V_{OUT}$) is less than the dropout voltage ($V_{DO}$), the PMOS pass device is in the linear (triode) region of operation. The input-to-output resistance is equal to the drain-source on-state resistance ($R_{DS(on)}$) of the PMOS pass element. $V_{DO}$ scales approximately with output current because the PMOS device behaves as a resistor in dropout.

As with any linear regulator, PSRR and transient response are degraded as ($V_{IN}$ – $V_{OUT}$) approaches dropout. This effect is shown in Figure 13.

### 7.3.4 Undervoltage Lockout

The TLV702-Q1 uses a UVLO circuit to keep the output shut off until internal circuitry is operating properly.

## 7.4 Device Functional Modes

### 7.4.1 Normal Operation

The device regulates to the nominal output voltage under the following conditions:

- The input voltage is greater than the nominal output voltage added to the dropout voltage.
- The output current is less than the current limit.
- The input voltage is greater than the UVLO voltage.

### 7.4.2 Dropout Operation

If the input voltage is less than the nominal output voltage plus the specified dropout voltage, but all other conditions are met for normal operation, the device operates in dropout mode. In this condition, the output voltage is the same as the input voltage minus the dropout voltage. The transient performance of the device is significantly degraded because the pass device is in a triode state and no longer regulates the output voltage of the LDO. Line or load transients in dropout may result in large output voltage deviations.

Table 1 lists the conditions that lead to the different modes of operation.

**Table 1. Device Functional Mode Comparison**

| OPERATING MODE | PARAMETER | |
|---|---|---|
| | $V_{IN}$ | $I_{OUT}$ |
| Normal mode | $V_{IN} > V_{OUT(nom)} + V_{DO}$ | $I_{OUT} < I_{CL}$ |
| Dropout mode | $V_{IN} < V_{OUT(nom)} + V_{DO}$ | $I_{OUT} < I_{CL}$ |
| Current limit | $V_{IN} >$ UVLO | $I_{OUT} > I_{CL}$ |


Copyright © 2013–2019, Texas Instruments Incorporated

# 8 Application and Implementation

**NOTE**

Information in the following applications sections is not part of the TI component specification, and TI does not warrant its accuracy or completeness. TI's customers are responsible for determining suitability of components for their purposes. Customers should validate and test their design implementation to confirm system functionality.

## 8.1 Application Information

The TLV702-Q1 belongs to a new family of next-generation value LDO regulators. These devices consume low quiescent current and deliver excellent line and load transient performance. These characteristics, combined with low noise and very good PSRR with little ($V_{IN}$ – $V_{OUT}$) headroom, make this family of devices ideal for portable RF applications. This family of regulators offers current limit and thermal protection, and is specified from –40°C to +125°C.

## 8.2 Typical Application

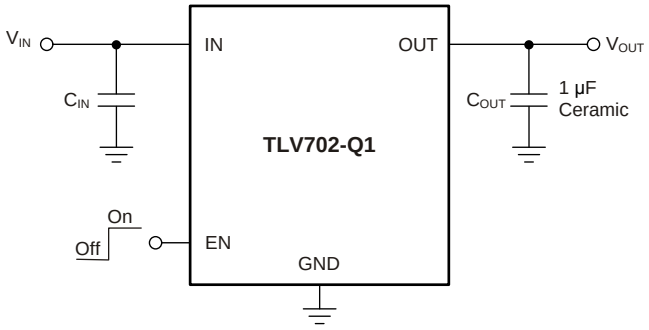


**Figure 24. Typical Application Circuit**

### 8.2.1 Design Requirements

Table 2 lists the design parameters.

**Table 2. Design Parameters**

| PARAMETER | DESIGN REQUIREMENT |
|---|---|
| Input voltage | 2.5 V to 3.3 V |
| Output voltage | 1.8 V |
| Output current | 100 mA |

### 8.2.2 Detailed Design Procedure

#### *8.2.2.1 Input and Output Capacitor Requirements*

1-μF X5R- and X7R-type ceramic capacitors are recommended because these capacitors have minimal variation in value and equivalent series resistance (ESR) over temperature.

However, the TLV702-Q1 is designed to be stable with an *effective capacitance* of 0.1 μF or larger at the output. Thus, the device is stable with capacitors of other dielectric types as well, as long as the effective capacitance under operating bias voltage and temperature is greater than 0.1 μF. This effective capacitance refers to the capacitance that the LDO sees under operating bias voltage and temperature conditions; that is, the capacitance after taking both bias voltage and temperature derating into consideration. In addition to allowing the use of lower-cost dielectrics, this capability of being stable with 0.1-μF effective capacitance also enables the use of smaller footprint capacitors that have higher derating in size- and space-constrained applications.

Using a 0.1-μF rated capacitor at the output of the LDO does not ensure stability because the effective capacitance under the specified operating conditions must not be less than 0.1 μF. Maximum ESR should be less than 200 mΩ.

Although an input capacitor is not required for stability, it is good analog design practice to connect a 0.1-μF to 1-μF, low ESR capacitor across the IN pin and GND pin of the regulator. This capacitor counteracts reactive input sources and improves transient response, noise rejection, and ripple rejection. A higher-value capacitor may be necessary if large, fast rise-time load transients are anticipated, or if the device is not located close to the power source. If source impedance is more than 2 Ω, a 0.1-μF input capacitor may be necessary for stability.

#### *8.2.2.2 Transient Response*

As with any regulator, increasing the size of the output capacitor reduces overshoot and undershoot magnitude, but increases the duration of the transient response.

### 8.2.3 Application Curves

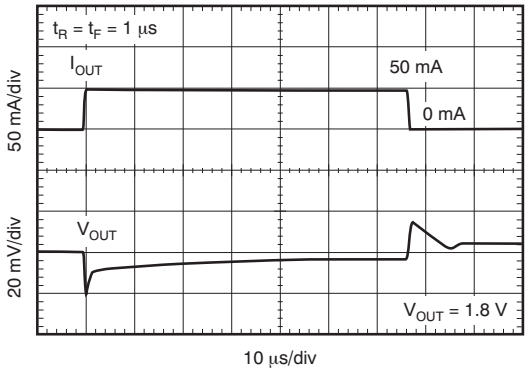


**Figure 25. Load Transient Response**

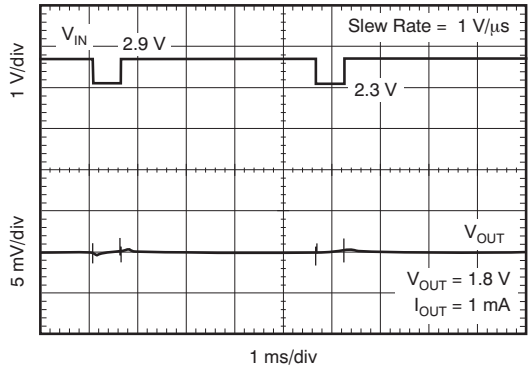


**Figure 26. Line Transient Response**


Copyright © 2013–2019, Texas Instruments Incorporated

# 9 Power Supply Recommendations

Connect a low output impedance power supply directly to the IN pin of the TLV702-Q1. Inductive impedances between the input supply and the IN pin can create significant voltage excursions at the IN pin during start-up or load transient events.

## 9.1 Power Dissipation

The ability to remove heat from the die is different for each package type, presenting different considerations in the printed-circuit-board (PCB) layout. The PCB area around the device that is free of other components moves the heat from the device to the ambient air.

Refer to *Thermal Information* for thermal performance on the TLV702-Q1 evaluation module (EVM). The EVM is a two-layer board with two ounces of copper per side.

Power dissipation depends on input voltage and load conditions. Power dissipation ($P_D$) is equal to the product of the output current and the voltage drop across the output pass element, as shown in Equation 1.

$$P_D = (V_{IN} - V_{OUT}) \times I_{OUT} \quad (1)$$

# 10 Layout

## 10.1 Layout Guidelines

Place the input and output capacitors as close to the device pins as possible. To improve ac performance such as PSRR, output noise, and transient response, design the board with separate ground planes for $V_{IN}$ and $V_{OUT}$, with the ground plane connected only at the GND pin of the device. In addition, connect the ground connection for the output capacitor directly to the GND pin of the device. High-ESR capacitors may degrade PSRR performance.

### 10.1.1 Thermal Consideration

Thermal protection disables the output when the junction temperature rises to approximately 165°C, allowing the device to cool. When the junction temperature cools to approximately 145°C, the output circuitry is again enabled. Depending on power dissipation, thermal resistance, and ambient temperature, the thermal protection circuit may cycle on and off. This cycling limits the dissipation of the regulator, protecting it from damage as a result of overheating.

Any tendency to activate the thermal protection circuit indicates excessive power dissipation or an inadequate heatsink. For reliable operation, limit junction temperature to 125°C maximum.

To estimate the margin of safety in a complete design (including heatsink), increase the ambient temperature until the thermal protection is triggered; use worst-case loads and signal conditions.

The internal protection circuitry of the TLV702-Q1 is designed to protect against overload conditions but is not intended to replace proper heatsinking. Continuously running the TLV702-Q1 into thermal shutdown degrades device reliability.

Copyright © 2013–2019, Texas Instruments Incorporated

## Layout Guidelines (continued)

### 10.1.2 Package Mounting

Solder pad footprint recommendations for the TLV702-Q1 are available from the TI website at www.ti.com. The recommended layout examples for the DDC and DSE packages are shown in Figure 27 and Figure 28, respectively.

## 10.2 Layout Examples

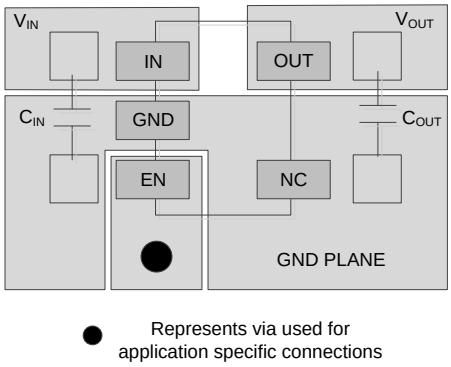


**Figure 27. Layout Example for the DDC and DBV Packages**

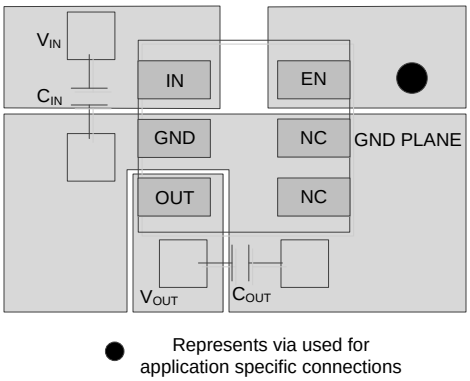


**Figure 28. Layout Example for the DSE Package**


Copyright © 2013–2019, Texas Instruments Incorporated

# 11 Device and Documentation Support

## 11.1 Device Support

### 11.1.1 Development Support

#### *11.1.1.1 Spice Models*

Computer simulation of circuit performance using SPICE is often useful when analyzing the performance of analog circuits and systems. A SPICE model for the TLV702 is available through the product folders under *Tools & Software*.

### 11.1.2 Device Nomenclature

**Table 3. Ordering Information(1)**

| PRODUCT | $V_{OUT}$ (2) |
|---|---|
| TLV702**xx** ***yyyz*** | **XX** is nominal output voltage (for example, 28 = 2.8 V).<br>**YYY** is the package designator.<br>**Z** is tape and reel quantity (R = 3000, T = 250). |

(1) For the most current package and ordering information see the Package Option Addendum at the end of this document, or visit the device product folder at www.ti.com.
(2) Output voltages from 1.2 V to 4.8 V in 50-mV increments are available. Contact factory for details and availability.

## 11.2 Documentation Support

### 11.2.1 Related Documentation

For related documentation see the following:

Texas Instruments, *Using the TLV700xxEVM-503* user's guide

## 11.3 Receiving Notification of Documentation Updates

To receive notification of documentation updates, navigate to the device product folder on ti.com. In the upper right corner, click on *Alert me* to register and receive a weekly digest of any product information that has changed. For change details, review the revision history included in any revised document.

## 11.4 Community Resources

The following links connect to TI community resources. Linked contents are provided "AS IS" by the respective contributors. They do not constitute TI specifications and do not necessarily reflect TI's views; see TI's Terms of Use.

**TI E2E™ Online Community** ***TI's Engineer-to-Engineer (E2E) Community.*** Created to foster collaboration among engineers. At e2e.ti.com, you can ask questions, share knowledge, explore ideas and help solve problems with fellow engineers.

**Design Support** ***TI's Design Support*** Quickly find helpful E2E forums along with design support tools and contact information for technical support.

## 11.5 Trademarks

E2E is a trademark of Texas Instruments.
All other trademarks are the property of their respective owners.

## 11.6 Electrostatic Discharge Caution



This integrated circuit can be damaged by ESD. Texas Instruments recommends that all integrated circuits be handled with appropriate precautions. Failure to observe proper handling and installation procedures can cause damage.

ESD damage can range from subtle performance degradation to complete device failure. Precision integrated circuits may be more susceptible to damage because very small parametric changes could cause the device not to meet its published specifications.

Copyright © 2013–2019, Texas Instruments Incorporated

### 11.7 Glossary

SLYZ022 — *TI Glossary*.

This glossary lists and explains terms, acronyms, and definitions.

## 12 Mechanical, Packaging, and Orderable Information

The following pages include mechanical, packaging, and orderable information. This information is the most current data available for the designated devices. This data is subject to change without notice and revision of this document. For browser-based versions of this data sheet, refer to the left-hand navigation.


Copyright © 2013–2019, Texas Instruments Incorporated

## PACKAGING INFORMATION

| Orderable part number | Status (1) | Material type (2) | Package \| Pins | Package qty \| Carrier | RoHS (3) | Lead finish/ Ball material (4) | MSL rating/ Peak reflow (5) | Op temp (°C) | Part marking (6) |
|---|---|---|---|---|---|---|---|---|---|
| TLV702125QDBVRQ1 | Active | Production | SOT-23 (DBV) \| 5 | 3000 \| LARGE T&R | Yes | NIPDAU \| SN \| NIPDAUAG | Level-1-260C-UNLIM | -40 to 125 | 1M57 |
| TLV702125QDBVRQ1.A | Active | Production | SOT-23 (DBV) \| 5 | 3000 \| LARGE T&R | Yes | NIPDAU | Level-1-260C-UNLIM | -40 to 125 | 1M57 |
| TLV702125QDBVRQ1.B | Active | Production | SOT-23 (DBV) \| 5 | 3000 \| LARGE T&R | Yes | NIPDAU | Level-1-260C-UNLIM | -40 to 125 | 1M57 |
| TLV70212QDBVRQ1 | Active | Production | SOT-23 (DBV) \| 5 | 3000 \| LARGE T&R | Yes | NIPDAU \| NIPDAUAG | Level-1-260C-UNLIM | -40 to 125 | 1B5H |
| TLV70212QDBVRQ1.A | Active | Production | SOT-23 (DBV) \| 5 | 3000 \| LARGE T&R | Yes | NIPDAU | Level-1-260C-UNLIM | -40 to 125 | 1B5H |
| TLV70212QDBVRQ1.B | Active | Production | SOT-23 (DBV) \| 5 | 3000 \| LARGE T&R | Yes | NIPDAU | Level-1-260C-UNLIM | -40 to 125 | 1B5H |
| TLV70212QDSERQ1 | Active | Production | WSON (DSE) \| 6 | 3000 \| LARGE T&R | Yes | NIPDAUAG | Level-1-260C-UNLIM | -40 to 125 | H9 |
| TLV70212QDSERQ1.A | Active | Production | WSON (DSE) \| 6 | 3000 \| LARGE T&R | Yes | NIPDAUAG | Level-1-260C-UNLIM | -40 to 125 | H9 |
| TLV70212QDSERQ1.B | Active | Production | WSON (DSE) \| 6 | 3000 \| LARGE T&R | Yes | NIPDAUAG | Level-1-260C-UNLIM | -40 to 125 | H9 |
| TLV70213QDSERQ1 | Active | Production | WSON (DSE) \| 6 | 3000 \| LARGE T&R | Yes | NIPDAUAG | Level-1-260C-UNLIM | -40 to 125 | H8 |
| TLV70213QDSERQ1.A | Active | Production | WSON (DSE) \| 6 | 3000 \| LARGE T&R | Yes | NIPDAUAG | Level-1-260C-UNLIM | -40 to 125 | H8 |
| TLV70213QDSERQ1.B | Active | Production | WSON (DSE) \| 6 | 3000 \| LARGE T&R | Yes | NIPDAUAG | Level-1-260C-UNLIM | -40 to 125 | H8 |
| TLV70215QDBVRQ1 | Active | Production | SOT-23 (DBV) \| 5 | 3000 \| LARGE T&R | Yes | NIPDAU \| NIPDAUAG | Level-1-260C-UNLIM | -40 to 125 | 1B6H |
| TLV70215QDBVRQ1.A | Active | Production | SOT-23 (DBV) \| 5 | 3000 \| LARGE T&R | Yes | NIPDAU | Level-1-260C-UNLIM | -40 to 125 | 1B6H |
| TLV70215QDBVRQ1.B | Active | Production | SOT-23 (DBV) \| 5 | 3000 \| LARGE T&R | Yes | NIPDAU | Level-1-260C-UNLIM | -40 to 125 | 1B6H |
| TLV70215QDSERQ1 | Active | Production | WSON (DSE) \| 6 | 3000 \| LARGE T&R | Yes | NIPDAUAG | Level-1-260C-UNLIM | -40 to 125 | HB |
| TLV70215QDSERQ1.A | Active | Production | WSON (DSE) \| 6 | 3000 \| LARGE T&R | Yes | NIPDAUAG | Level-1-260C-UNLIM | -40 to 125 | HB |
| TLV70215QDSERQ1.B | Active | Production | WSON (DSE) \| 6 | 3000 \| LARGE T&R | Yes | NIPDAUAG | Level-1-260C-UNLIM | -40 to 125 | HB |
| TLV70218QDBVRQ1 | Active | Production | SOT-23 (DBV) \| 5 | 3000 \| LARGE T&R | Yes | NIPDAU \| SN \| NIPDAUAG | Level-1-260C-UNLIM | -40 to 125 | 1B7H |
| TLV70218QDBVRQ1.A | Active | Production | SOT-23 (DBV) \| 5 | 3000 \| LARGE T&R | Yes | NIPDAU | Level-1-260C-UNLIM | -40 to 125 | 1B7H |
| TLV70218QDBVRQ1.B | Active | Production | SOT-23 (DBV) \| 5 | 3000 \| LARGE T&R | Yes | NIPDAU | Level-1-260C-UNLIM | -40 to 125 | 1B7H |
| TLV70218QDSERQ1 | Active | Production | WSON (DSE) \| 6 | 3000 \| LARGE T&R | Yes | NIPDAUAG | Level-1-260C-UNLIM | -40 to 125 | HC |
| TLV70218QDSERQ1.A | Active | Production | WSON (DSE) \| 6 | 3000 \| LARGE T&R | Yes | NIPDAUAG | Level-1-260C-UNLIM | -40 to 125 | HC |
| TLV70218QDSERQ1.B | Active | Production | WSON (DSE) \| 6 | 3000 \| LARGE T&R | Yes | NIPDAUAG | Level-1-260C-UNLIM | -40 to 125 | HC |
| TLV70225QDSERQ1 | Active | Production | WSON (DSE) \| 6 | 3000 \| LARGE T&R | Yes | NIPDAU | Level-1-260C-UNLIM | -40 to 125 | G7 |
| TLV70225QDSERQ1.A | Active | Production | WSON (DSE) \| 6 | 3000 \| LARGE T&R | Yes | NIPDAU | Level-1-260C-UNLIM | -40 to 125 | G7 |
| TLV70225QDSERQ1.B | Active | Production | WSON (DSE) \| 6 | 3000 \| LARGE T&R | Yes | NIPDAU | Level-1-260C-UNLIM | -40 to 125 | G7 |
| TLV70227QDBVRQ1 | Active | Production | SOT-23 (DBV) \| 5 | 3000 \| LARGE T&R | Yes | NIPDAU \| NIPDAUAG | Level-1-260C-UNLIM | -40 to 125 | 1B8H |

| Orderable part number | Status (1) | Material type (2) | Package \| Pins | Package qty \| Carrier | RoHS (3) | Lead finish/ Ball material (4) | MSL rating/ Peak reflow (5) | Op temp (°C) | Part marking (6) |
|---|---|---|---|---|---|---|---|---|---|
| TLV70227QDBVRQ1.A | Active | Production | SOT-23 (DBV) \| 5 | 3000 \| LARGE T&R | Yes | NIPDAU | Level-1-260C-UNLIM | -40 to 125 | 1B8H |
| TLV70227QDBVRQ1.B | Active | Production | SOT-23 (DBV) \| 5 | 3000 \| LARGE T&R | Yes | NIPDAU | Level-1-260C-UNLIM | -40 to 125 | 1B8H |
| TLV70227QDSERQ1 | Active | Production | WSON (DSE) \| 6 | 3000 \| LARGE T&R | Yes | NIPDAUAG | Level-1-260C-UNLIM | -40 to 125 | H7 |
| TLV70227QDSERQ1.A | Active | Production | WSON (DSE) \| 6 | 3000 \| LARGE T&R | Yes | NIPDAUAG | Level-1-260C-UNLIM | -40 to 125 | H7 |
| TLV70227QDSERQ1.B | Active | Production | WSON (DSE) \| 6 | 3000 \| LARGE T&R | Yes | NIPDAUAG | Level-1-260C-UNLIM | -40 to 125 | H7 |
| TLV70228QDBVRQ1 | Active | Production | SOT-23 (DBV) \| 5 | 3000 \| LARGE T&R | Yes | NIPDAU \| NIPDAUAG | Level-1-260C-UNLIM | -40 to 125 | 1B9H |
| TLV70228QDBVRQ1.A | Active | Production | SOT-23 (DBV) \| 5 | 3000 \| LARGE T&R | Yes | NIPDAU | Level-1-260C-UNLIM | -40 to 125 | 1B9H |
| TLV70228QDBVRQ1.B | Active | Production | SOT-23 (DBV) \| 5 | 3000 \| LARGE T&R | Yes | NIPDAU | Level-1-260C-UNLIM | -40 to 125 | 1B9H |
| TLV70228QDDCRQ1 | Active | Production | SOT-23-THIN (DDC) \| 5 | 3000 \| LARGE T&R | Yes | NIPDAU | Level-2-260C-1 YEAR | -40 to 125 | SJV |
| TLV70228QDDCRQ1.A | Active | Production | SOT-23-THIN (DDC) \| 5 | 3000 \| LARGE T&R | Yes | NIPDAU | Level-2-260C-1 YEAR | -40 to 125 | SJV |
| TLV70228QDDCRQ1.B | Active | Production | SOT-23-THIN (DDC) \| 5 | 3000 \| LARGE T&R | Yes | NIPDAU | Level-2-260C-1 YEAR | -40 to 125 | SJV |
| TLV70228QDSERQ1 | Active | Production | WSON (DSE) \| 6 | 3000 \| LARGE T&R | Yes | NIPDAU | Level-1-260C-UNLIM | -40 to 125 | HD |
| TLV70228QDSERQ1.A | Active | Production | WSON (DSE) \| 6 | 3000 \| LARGE T&R | Yes | NIPDAU | Level-1-260C-UNLIM | -40 to 125 | HD |
| TLV70228QDSERQ1.B | Active | Production | WSON (DSE) \| 6 | 3000 \| LARGE T&R | Yes | NIPDAU | Level-1-260C-UNLIM | -40 to 125 | HD |
| TLV70229QDBVRQ1 | Active | Production | SOT-23 (DBV) \| 5 | 3000 \| LARGE T&R | Yes | NIPDAUAG | Level-1-260C-UNLIM | -40 to 125 | 1BAH |
| TLV70229QDBVRQ1.A | Active | Production | SOT-23 (DBV) \| 5 | 3000 \| LARGE T&R | Yes | NIPDAUAG | Level-1-260C-UNLIM | -40 to 125 | 1BAH |
| TLV70229QDBVRQ1.B | Active | Production | SOT-23 (DBV) \| 5 | 3000 \| LARGE T&R | Yes | NIPDAUAG | Level-1-260C-UNLIM | -40 to 125 | 1BAH |
| TLV70229QDSERQ1 | Active | Production | WSON (DSE) \| 6 | 3000 \| LARGE T&R | Yes | NIPDAUAG | Level-1-260C-UNLIM | -40 to 125 | H1 |
| TLV70229QDSERQ1.A | Active | Production | WSON (DSE) \| 6 | 3000 \| LARGE T&R | Yes | NIPDAUAG | Level-1-260C-UNLIM | -40 to 125 | H1 |
| TLV70229QDSERQ1.B | Active | Production | WSON (DSE) \| 6 | 3000 \| LARGE T&R | Yes | NIPDAUAG | Level-1-260C-UNLIM | -40 to 125 | H1 |
| TLV70230QDBVRQ1 | Active | Production | SOT-23 (DBV) \| 5 | 3000 \| LARGE T&R | Yes | NIPDAUAG | Level-1-260C-UNLIM | -40 to 125 | 1MQ7 |
| TLV70230QDBVRQ1.A | Active | Production | SOT-23 (DBV) \| 5 | 3000 \| LARGE T&R | Yes | NIPDAUAG | Level-1-260C-UNLIM | -40 to 125 | 1MQ7 |
| TLV70230QDBVRQ1.B | Active | Production | SOT-23 (DBV) \| 5 | 3000 \| LARGE T&R | Yes | NIPDAUAG | Level-1-260C-UNLIM | -40 to 125 | 1MQ7 |
| TLV70230QDSERQ1 | Active | Production | WSON (DSE) \| 6 | 3000 \| LARGE T&R | Yes | NIPDAUAG | Level-1-260C-UNLIM | -40 to 125 | HE |
| TLV70230QDSERQ1.A | Active | Production | WSON (DSE) \| 6 | 3000 \| LARGE T&R | Yes | NIPDAUAG | Level-1-260C-UNLIM | -40 to 125 | HE |
| TLV70230QDSERQ1.B | Active | Production | WSON (DSE) \| 6 | 3000 \| LARGE T&R | Yes | NIPDAUAG | Level-1-260C-UNLIM | -40 to 125 | HE |
| TLV70231QDSERQ1 | Active | Production | WSON (DSE) \| 6 | 3000 \| LARGE T&R | Yes | NIPDAUAG | Level-1-260C-UNLIM | -40 to 125 | HF |
| TLV70231QDSERQ1.A | Active | Production | WSON (DSE) \| 6 | 3000 \| LARGE T&R | Yes | NIPDAUAG | Level-1-260C-UNLIM | -40 to 125 | HF |

| Orderable part number | Status (1) | Material type (2) | Package \| Pins | Package qty \| Carrier | RoHS (3) | Lead finish/ Ball material (4) | MSL rating/ Peak reflow (5) | Op temp (°C) | Part marking (6) |
|---|---|---|---|---|---|---|---|---|---|
| TLV70231QDSERQ1.B | Active | Production | WSON (DSE) \| 6 | 3000 \| LARGE T&R | Yes | NIPDAUAG | Level-1-260C-UNLIM | -40 to 125 | HF |
| TLV70232QDSERQ1 | Active | Production | WSON (DSE) \| 6 | 3000 \| LARGE T&R | Yes | NIPDAUAG | Level-1-260C-UNLIM | -40 to 125 | HG |
| TLV70232QDSERQ1.A | Active | Production | WSON (DSE) \| 6 | 3000 \| LARGE T&R | Yes | NIPDAUAG | Level-1-260C-UNLIM | -40 to 125 | HG |
| TLV70232QDSERQ1.B | Active | Production | WSON (DSE) \| 6 | 3000 \| LARGE T&R | Yes | NIPDAUAG | Level-1-260C-UNLIM | -40 to 125 | HG |
| TLV70233QDBVRQ1 | Active | Production | SOT-23 (DBV) \| 5 | 3000 \| LARGE T&R | Yes | NIPDAU \| SN \| NIPDAUAG | Level-1-260C-UNLIM | -40 to 125 | 1BBH |
| TLV70233QDBVRQ1.A | Active | Production | SOT-23 (DBV) \| 5 | 3000 \| LARGE T&R | Yes | NIPDAU | Level-1-260C-UNLIM | -40 to 125 | 1BBH |
| TLV70233QDBVRQ1.B | Active | Production | SOT-23 (DBV) \| 5 | 3000 \| LARGE T&R | Yes | NIPDAU | Level-1-260C-UNLIM | -40 to 125 | 1BBH |
| TLV70233QDSERQ1 | Active | Production | WSON (DSE) \| 6 | 3000 \| LARGE T&R | Yes | NIPDAUAG | Level-1-260C-UNLIM | -40 to 125 | H2 |
| TLV70233QDSERQ1.A | Active | Production | WSON (DSE) \| 6 | 3000 \| LARGE T&R | Yes | NIPDAUAG | Level-1-260C-UNLIM | -40 to 125 | H2 |
| TLV70233QDSERQ1.B | Active | Production | WSON (DSE) \| 6 | 3000 \| LARGE T&R | Yes | NIPDAUAG | Level-1-260C-UNLIM | -40 to 125 | H2 |
| TLV70236QDSERQ1 | Active | Production | WSON (DSE) \| 6 | 3000 \| LARGE T&R | Yes | NIPDAUAG | Level-1-260C-UNLIM | -40 to 125 | H3 |
| TLV70236QDSERQ1.A | Active | Production | WSON (DSE) \| 6 | 3000 \| LARGE T&R | Yes | NIPDAUAG | Level-1-260C-UNLIM | -40 to 125 | H3 |
| TLV70236QDSERQ1.B | Active | Production | WSON (DSE) \| 6 | 3000 \| LARGE T&R | Yes | NIPDAUAG | Level-1-260C-UNLIM | -40 to 125 | H3 |
| TLV70245QDSERQ1 | Active | Production | WSON (DSE) \| 6 | 3000 \| LARGE T&R | Yes | NIPDAUAG | Level-1-260C-UNLIM | -40 to 125 | HH |
| TLV70245QDSERQ1.A | Active | Production | WSON (DSE) \| 6 | 3000 \| LARGE T&R | Yes | NIPDAUAG | Level-1-260C-UNLIM | -40 to 125 | HH |
| TLV70245QDSERQ1.B | Active | Production | WSON (DSE) \| 6 | 3000 \| LARGE T&R | Yes | NIPDAUAG | Level-1-260C-UNLIM | -40 to 125 | HH |

(1) **Status:** For more details on status, see our product life cycle.

(2) **Material type:** When designated, preproduction parts are prototypes/experimental devices, and are not yet approved or released for full production. Testing and final process, including without limitation quality assurance, reliability performance testing, and/or process qualification, may not yet be complete, and this item is subject to further changes or possible discontinuation. If available for ordering, purchases will be subject to an additional waiver at checkout, and are intended for early internal evaluation purposes only. These items are sold without warranties of any kind.

(3) **RoHS values:** Yes, No, RoHS Exempt. See the TI RoHS Statement for additional information and value definition.

(4) **Lead finish/Ball material:** Parts may have multiple material finish options. Finish options are separated by a vertical ruled line. Lead finish/Ball material values may wrap to two lines if the finish value exceeds the maximum column width.

(5) **MSL rating/Peak reflow:** The moisture sensitivity level ratings and peak solder (reflow) temperatures. In the event that a part has multiple moisture sensitivity ratings, only the lowest level per JEDEC standards is shown. Refer to the shipping label for the actual reflow temperature that will be used to mount the part to the printed circuit board.

(6) **Part marking:** There may be an additional marking, which relates to the logo, the lot trace code information, or the environmental category of the part.

Multiple part markings will be inside parentheses. Only one part marking contained in parentheses and separated by a "~" will appear on a part. If a line is indented then it is a continuation of the previous line and the two combined represent the entire part marking for that device.

**Important Information and Disclaimer:**The information provided on this page represents TI's knowledge and belief as of the date that it is provided. TI bases its knowledge and belief on information provided by third parties, and makes no representation or warranty as to the accuracy of such information. Efforts are underway to better integrate information from third parties. TI has taken and continues to take reasonable steps to provide representative and accurate information but may not have conducted destructive testing or chemical analysis on incoming materials and chemicals. TI and TI suppliers consider certain information to be proprietary, and thus CAS numbers and other limited information may not be available for release.

In no event shall TI's liability arising out of such information exceed the total purchase price of the TI part(s) at issue in this document sold by TI to Customer on an annual basis.

**OTHER QUALIFIED VERSIONS OF TLV702-Q1 :**

- Catalog : TLV702

NOTE: Qualified Version Definitions:

- Catalog - TI's standard catalog product

## TAPE AND REEL INFORMATION

**REEL DIMENSIONS**

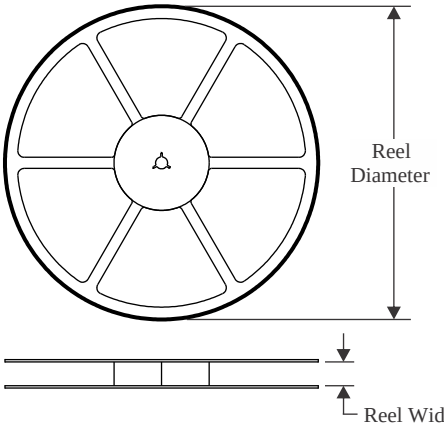


**TAPE DIMENSIONS**

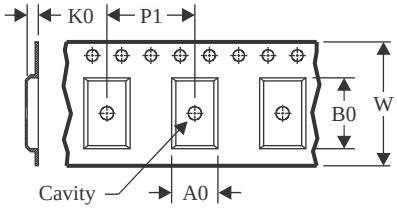


| | |
|---|---|
| A0 | Dimension designed to accommodate the component width |
| B0 | Dimension designed to accommodate the component length |
| K0 | Dimension designed to accommodate the component thickness |
| W | Overall width of the carrier tape |
| P1 | Pitch between successive cavity centers |

**QUADRANT ASSIGNMENTS FOR PIN 1 ORIENTATION IN TAPE**

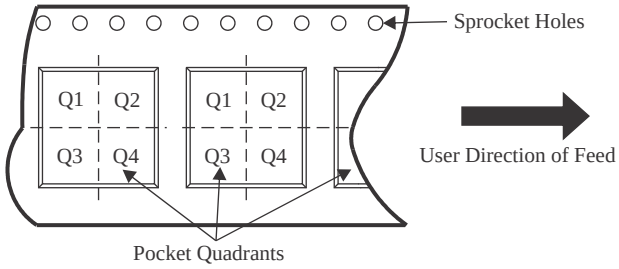


*All dimensions are nominal

| Device | Package Type | Package Drawing | Pins | SPQ | Reel Diameter (mm) | Reel Width W1 (mm) | A0 (mm) | B0 (mm) | K0 (mm) | P1 (mm) | W (mm) | Pin1 Quadrant |
|---|---|---|---|---|---|---|---|---|---|---|---|---|
| TLV702125QDBVRQ1 | SOT-23 | DBV | 5 | 3000 | 180.0 | 8.4 | 3.2 | 3.2 | 1.4 | 4.0 | 8.0 | Q3 |
| TLV702125QDBVRQ1 | SOT-23 | DBV | 5 | 3000 | 180.0 | 8.4 | 3.2 | 3.2 | 1.4 | 4.0 | 8.0 | Q3 |
| TLV702125QDBVRQ1 | SOT-23 | DBV | 5 | 3000 | 180.0 | 8.4 | 3.23 | 3.17 | 1.37 | 4.0 | 8.0 | Q3 |
| TLV70212QDBVRQ1 | SOT-23 | DBV | 5 | 3000 | 180.0 | 8.4 | 3.23 | 3.17 | 1.37 | 4.0 | 8.0 | Q3 |
| TLV70212QDBVRQ1 | SOT-23 | DBV | 5 | 3000 | 180.0 | 8.4 | 3.2 | 3.2 | 1.4 | 4.0 | 8.0 | Q3 |
| TLV70212QDSERQ1 | WSON | DSE | 6 | 3000 | 179.0 | 8.4 | 1.8 | 1.8 | 1.0 | 4.0 | 8.0 | Q2 |
| TLV70213QDSERQ1 | WSON | DSE | 6 | 3000 | 179.0 | 8.4 | 1.8 | 1.8 | 1.0 | 4.0 | 8.0 | Q2 |
| TLV70215QDBVRQ1 | SOT-23 | DBV | 5 | 3000 | 180.0 | 8.4 | 3.2 | 3.2 | 1.4 | 4.0 | 8.0 | Q3 |
| TLV70215QDBVRQ1 | SOT-23 | DBV | 5 | 3000 | 180.0 | 8.4 | 3.23 | 3.17 | 1.37 | 4.0 | 8.0 | Q3 |
| TLV70215QDSERQ1 | WSON | DSE | 6 | 3000 | 179.0 | 8.4 | 1.8 | 1.8 | 1.0 | 4.0 | 8.0 | Q2 |
| TLV70218QDBVRQ1 | SOT-23 | DBV | 5 | 3000 | 180.0 | 8.4 | 3.2 | 3.2 | 1.4 | 4.0 | 8.0 | Q3 |
| TLV70218QDBVRQ1 | SOT-23 | DBV | 5 | 3000 | 180.0 | 8.4 | 3.2 | 3.2 | 1.4 | 4.0 | 8.0 | Q3 |
| TLV70218QDBVRQ1 | SOT-23 | DBV | 5 | 3000 | 180.0 | 8.4 | 3.23 | 3.17 | 1.37 | 4.0 | 8.0 | Q3 |
| TLV70218QDSERQ1 | WSON | DSE | 6 | 3000 | 179.0 | 8.4 | 1.8 | 1.8 | 1.0 | 4.0 | 8.0 | Q2 |
| TLV70225QDSERQ1 | WSON | DSE | 6 | 3000 | 179.0 | 8.4 | 1.8 | 1.8 | 1.0 | 4.0 | 8.0 | Q2 |
| TLV70227QDBVRQ1 | SOT-23 | DBV | 5 | 3000 | 180.0 | 8.4 | 3.2 | 3.2 | 1.4 | 4.0 | 8.0 | Q3 |

| Device | Package Type | Package Drawing | Pins | SPQ | Reel Diameter (mm) | Reel Width W1 (mm) | A0 (mm) | B0 (mm) | K0 (mm) | P1 (mm) | W (mm) | Pin1 Quadrant |
|---|---|---|---|---|---|---|---|---|---|---|---|---|
| TLV70227QDBVRQ1 | SOT-23 | DBV | 5 | 3000 | 180.0 | 8.4 | 3.23 | 3.17 | 1.37 | 4.0 | 8.0 | Q3 |
| TLV70227QDSERQ1 | WSON | DSE | 6 | 3000 | 179.0 | 8.4 | 1.8 | 1.8 | 1.0 | 4.0 | 8.0 | Q2 |
| TLV70228QDBVRQ1 | SOT-23 | DBV | 5 | 3000 | 180.0 | 8.4 | 3.2 | 3.2 | 1.4 | 4.0 | 8.0 | Q3 |
| TLV70228QDBVRQ1 | SOT-23 | DBV | 5 | 3000 | 180.0 | 8.4 | 3.23 | 3.17 | 1.37 | 4.0 | 8.0 | Q3 |
| TLV70228QDDCRQ1 | SOT-23-THIN | DDC | 5 | 3000 | 179.0 | 8.4 | 3.2 | 3.2 | 1.4 | 4.0 | 8.0 | Q3 |
| TLV70228QDSERQ1 | WSON | DSE | 6 | 3000 | 179.0 | 8.4 | 1.8 | 1.8 | 1.0 | 4.0 | 8.0 | Q2 |
| TLV70229QDBVRQ1 | SOT-23 | DBV | 5 | 3000 | 180.0 | 8.4 | 3.23 | 3.17 | 1.37 | 4.0 | 8.0 | Q3 |
| TLV70229QDSERQ1 | WSON | DSE | 6 | 3000 | 179.0 | 8.4 | 1.8 | 1.8 | 1.0 | 4.0 | 8.0 | Q2 |
| TLV70230QDBVRQ1 | SOT-23 | DBV | 5 | 3000 | 180.0 | 8.4 | 3.23 | 3.17 | 1.37 | 4.0 | 8.0 | Q3 |
| TLV70230QDSERQ1 | WSON | DSE | 6 | 3000 | 179.0 | 8.4 | 1.8 | 1.8 | 1.0 | 4.0 | 8.0 | Q2 |
| TLV70231QDSERQ1 | WSON | DSE | 6 | 3000 | 179.0 | 8.4 | 1.8 | 1.8 | 1.0 | 4.0 | 8.0 | Q2 |
| TLV70232QDSERQ1 | WSON | DSE | 6 | 3000 | 179.0 | 8.4 | 1.8 | 1.8 | 1.0 | 4.0 | 8.0 | Q2 |
| TLV70233QDBVRQ1 | SOT-23 | DBV | 5 | 3000 | 180.0 | 8.4 | 3.2 | 3.2 | 1.4 | 4.0 | 8.0 | Q3 |
| TLV70233QDBVRQ1 | SOT-23 | DBV | 5 | 3000 | 180.0 | 8.4 | 3.2 | 3.2 | 1.4 | 4.0 | 8.0 | Q3 |
| TLV70233QDBVRQ1 | SOT-23 | DBV | 5 | 3000 | 180.0 | 8.4 | 3.23 | 3.17 | 1.37 | 4.0 | 8.0 | Q3 |
| TLV70233QDSERQ1 | WSON | DSE | 6 | 3000 | 179.0 | 8.4 | 1.8 | 1.8 | 1.0 | 4.0 | 8.0 | Q2 |
| TLV70236QDSERQ1 | WSON | DSE | 6 | 3000 | 179.0 | 8.4 | 1.8 | 1.8 | 1.0 | 4.0 | 8.0 | Q2 |
| TLV70245QDSERQ1 | WSON | DSE | 6 | 3000 | 179.0 | 8.4 | 1.8 | 1.8 | 1.0 | 4.0 | 8.0 | Q2 |

TAPE AND REEL BOX DIMENSIONS

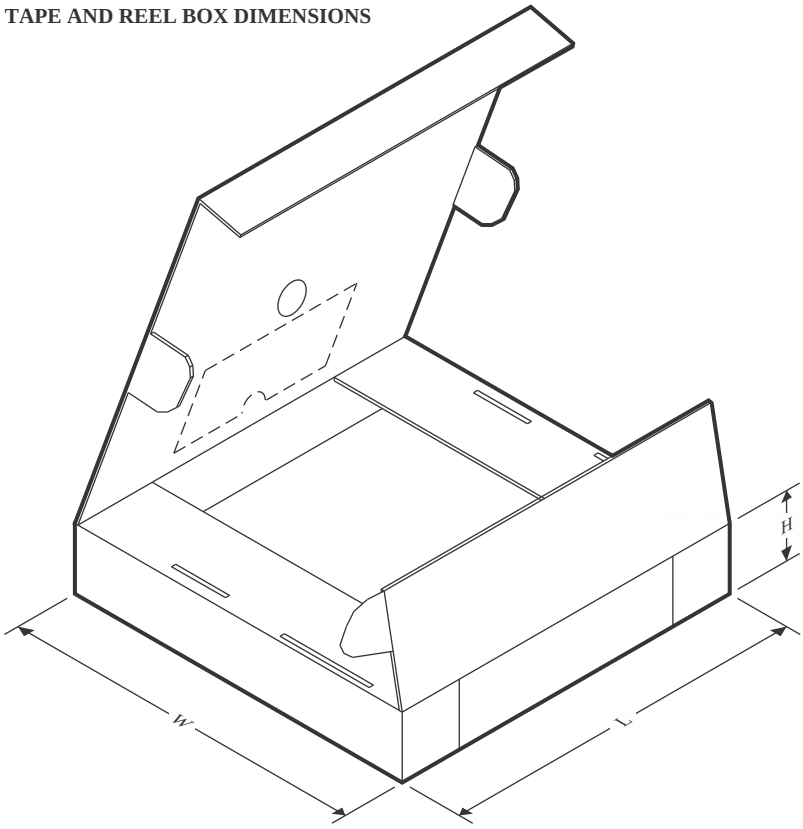


*All dimensions are nominal

| Device | Package Type | Package Drawing | Pins | SPQ | Length (mm) | Width (mm) | Height (mm) |
|---|---|---|---|---|---|---|---|
| TLV702125QDBVRQ1 | SOT-23 | DBV | 5 | 3000 | 210.0 | 185.0 | 35.0 |
| TLV702125QDBVRQ1 | SOT-23 | DBV | 5 | 3000 | 210.0 | 185.0 | 35.0 |
| TLV702125QDBVRQ1 | SOT-23 | DBV | 5 | 3000 | 183.0 | 183.0 | 20.0 |
| TLV70212QDBVRQ1 | SOT-23 | DBV | 5 | 3000 | 183.0 | 183.0 | 20.0 |
| TLV70212QDBVRQ1 | SOT-23 | DBV | 5 | 3000 | 210.0 | 185.0 | 35.0 |
| TLV70212QDSERQ1 | WSON | DSE | 6 | 3000 | 200.0 | 183.0 | 25.0 |
| TLV70213QDSERQ1 | WSON | DSE | 6 | 3000 | 200.0 | 183.0 | 25.0 |
| TLV70215QDBVRQ1 | SOT-23 | DBV | 5 | 3000 | 210.0 | 185.0 | 35.0 |
| TLV70215QDBVRQ1 | SOT-23 | DBV | 5 | 3000 | 183.0 | 183.0 | 20.0 |
| TLV70215QDSERQ1 | WSON | DSE | 6 | 3000 | 200.0 | 183.0 | 25.0 |
| TLV70218QDBVRQ1 | SOT-23 | DBV | 5 | 3000 | 210.0 | 185.0 | 35.0 |
| TLV70218QDBVRQ1 | SOT-23 | DBV | 5 | 3000 | 210.0 | 185.0 | 35.0 |
| TLV70218QDBVRQ1 | SOT-23 | DBV | 5 | 3000 | 183.0 | 183.0 | 20.0 |
| TLV70218QDSERQ1 | WSON | DSE | 6 | 3000 | 200.0 | 183.0 | 25.0 |
| TLV70225QDSERQ1 | WSON | DSE | 6 | 3000 | 200.0 | 183.0 | 25.0 |
| TLV70227QDBVRQ1 | SOT-23 | DBV | 5 | 3000 | 210.0 | 185.0 | 35.0 |
| TLV70227QDBVRQ1 | SOT-23 | DBV | 5 | 3000 | 183.0 | 183.0 | 20.0 |
| TLV70227QDSERQ1 | WSON | DSE | 6 | 3000 | 200.0 | 183.0 | 25.0 |

| Device | Package Type | Package Drawing | Pins | SPQ | Length (mm) | Width (mm) | Height (mm) |
|---|---|---|---|---|---|---|---|
| TLV70228QDBVRQ1 | SOT-23 | DBV | 5 | 3000 | 210.0 | 185.0 | 35.0 |
| TLV70228QDBVRQ1 | SOT-23 | DBV | 5 | 3000 | 183.0 | 183.0 | 20.0 |
| TLV70228QDDCRQ1 | SOT-23-THIN | DDC | 5 | 3000 | 213.0 | 191.0 | 35.0 |
| TLV70228QDSERQ1 | WSON | DSE | 6 | 3000 | 200.0 | 183.0 | 25.0 |
| TLV70229QDBVRQ1 | SOT-23 | DBV | 5 | 3000 | 183.0 | 183.0 | 20.0 |
| TLV70229QDSERQ1 | WSON | DSE | 6 | 3000 | 200.0 | 183.0 | 25.0 |
| TLV70230QDBVRQ1 | SOT-23 | DBV | 5 | 3000 | 183.0 | 183.0 | 20.0 |
| TLV70230QDSERQ1 | WSON | DSE | 6 | 3000 | 200.0 | 183.0 | 25.0 |
| TLV70231QDSERQ1 | WSON | DSE | 6 | 3000 | 200.0 | 183.0 | 25.0 |
| TLV70232QDSERQ1 | WSON | DSE | 6 | 3000 | 200.0 | 183.0 | 25.0 |
| TLV70233QDBVRQ1 | SOT-23 | DBV | 5 | 3000 | 210.0 | 185.0 | 35.0 |
| TLV70233QDBVRQ1 | SOT-23 | DBV | 5 | 3000 | 210.0 | 185.0 | 35.0 |
| TLV70233QDBVRQ1 | SOT-23 | DBV | 5 | 3000 | 183.0 | 183.0 | 20.0 |
| TLV70233QDSERQ1 | WSON | DSE | 6 | 3000 | 200.0 | 183.0 | 25.0 |
| TLV70236QDSERQ1 | WSON | DSE | 6 | 3000 | 200.0 | 183.0 | 25.0 |
| TLV70245QDSERQ1 | WSON | DSE | 6 | 3000 | 200.0 | 183.0 | 25.0 |

# PACKAGE OUTLINE

## DBV0005A

## SOT-23 - 1.45 mm max height

SMALL OUTLINE TRANSISTOR

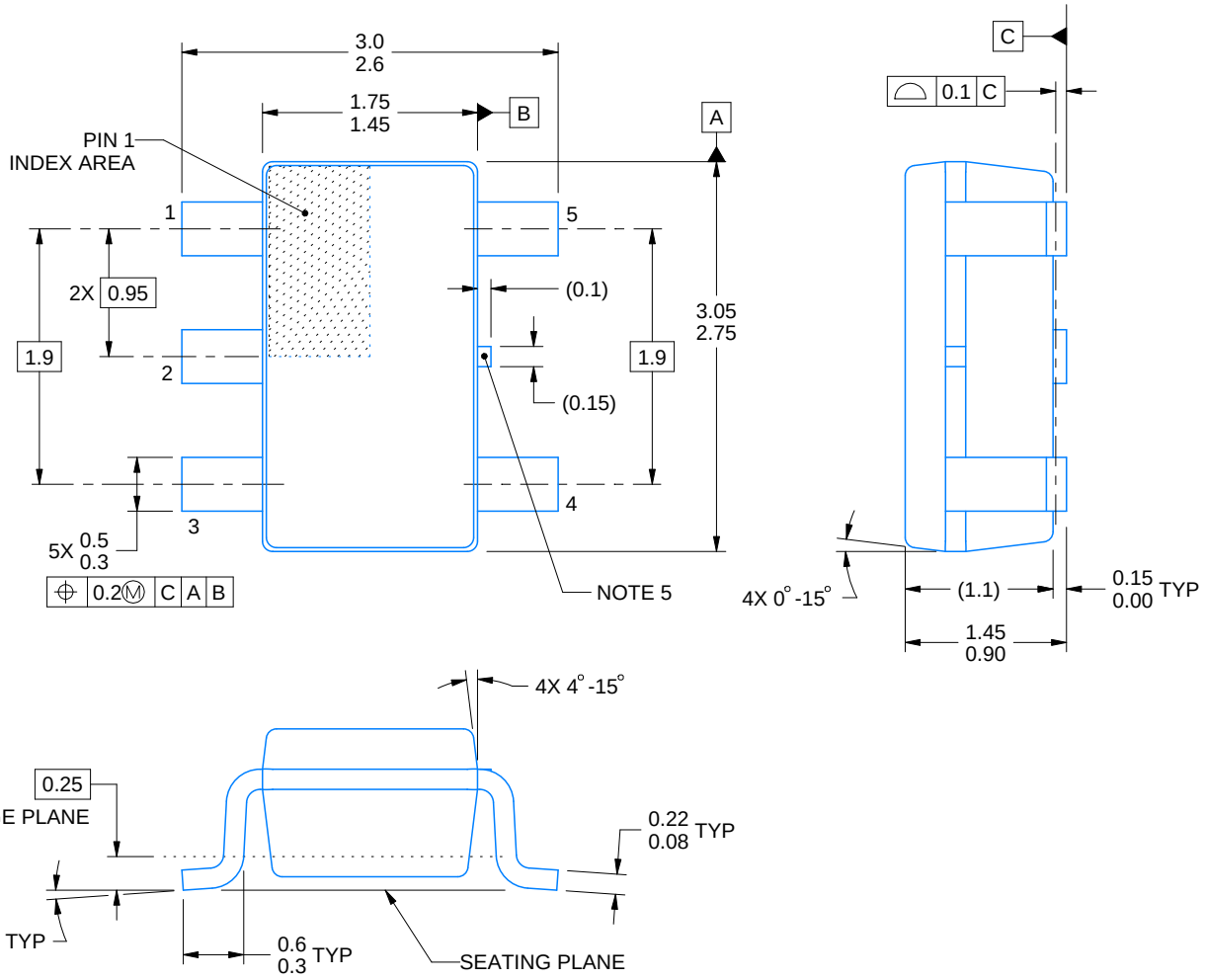


4214839/K 08/2024

NOTES:

1. All linear dimensions are in millimeters. Any dimensions in parenthesis are for reference only. Dimensioning and tolerancing per ASME Y14.5M.
2. This drawing is subject to change without notice.
3. Refernce JEDEC MO-178.
4. Body dimensions do not include mold flash, protrusions, or gate burrs. Mold flash, protrusions, or gate burrs shall not exceed 0.25 mm per side.
5. Support pin may differ or may not be present.

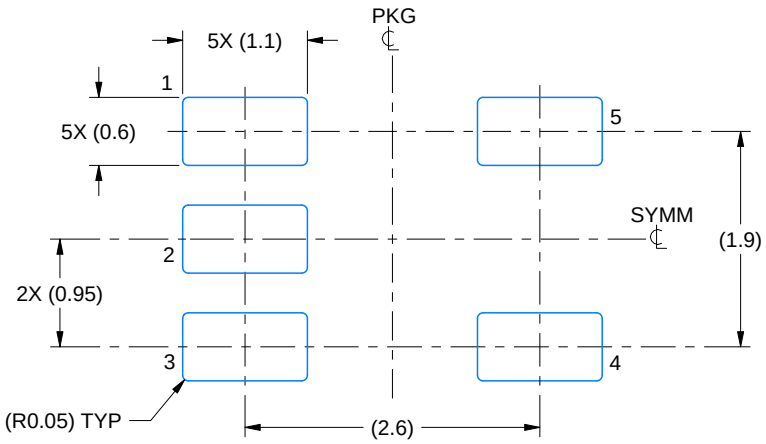


LAND PATTERN EXAMPLE
EXPOSED METAL SHOWN
SCALE:15X

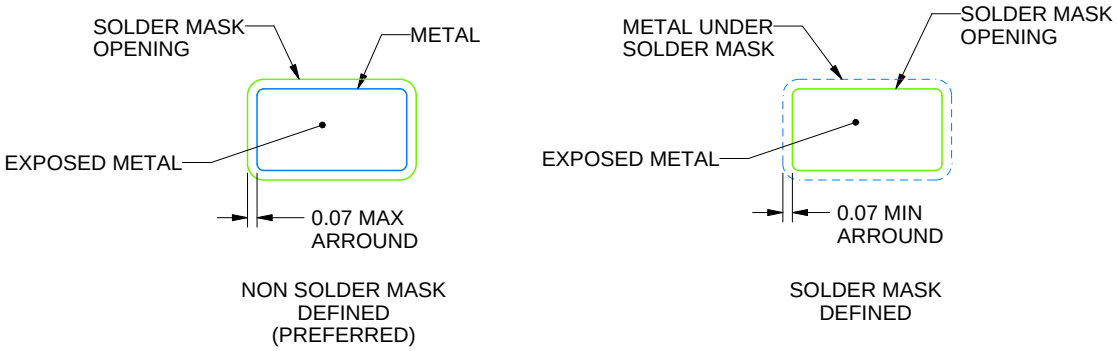


SOLDER MASK DETAILS

4214839/K 08/2024

NOTES: (continued)

6. Publication IPC-7351 may have alternate designs.
7. Solder mask tolerances between and around signal pads can vary based on board fabrication site.

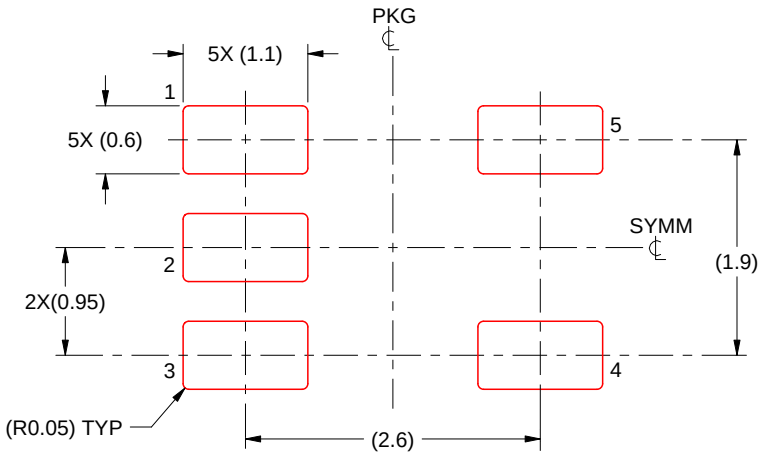


SOLDER PASTE EXAMPLE
BASED ON 0.125 mm THICK STENCIL
SCALE:15X

4214839/K 08/2024

NOTES: (continued)

8. Laser cutting apertures with trapezoidal walls and rounded corners may offer better paste release. IPC-7525 may have alternate design recommendations.
9. Board assembly site may have different recommendations for stencil design.

# DSE0006A

# PACKAGE OUTLINE

## WSON - 0.8 mm max height

PLASTIC SMALL OUTLINE - NO LEAD

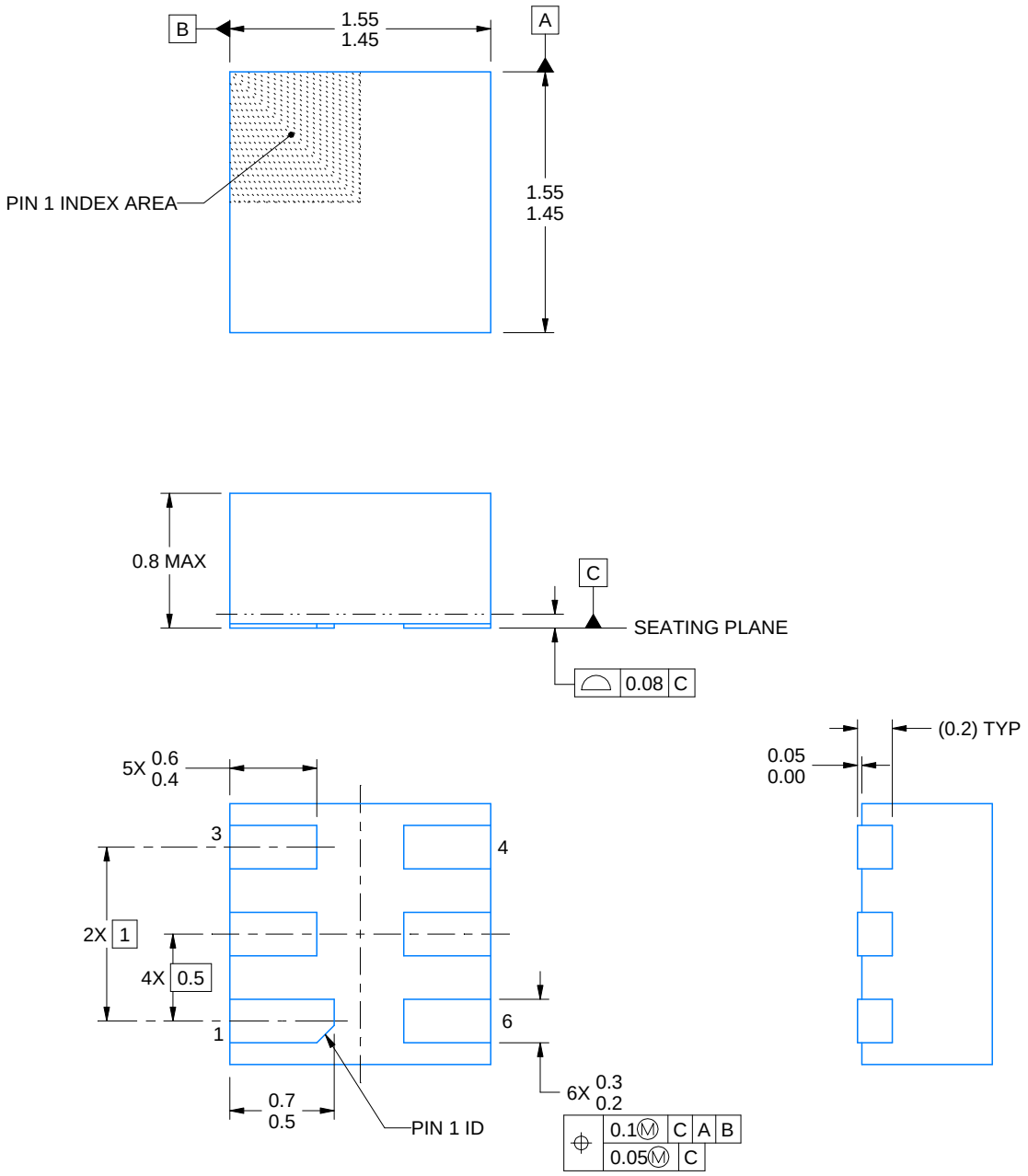


4220552/B 01/2024

NOTES:

1. All linear dimensions are in millimeters. Any dimensions in parenthesis are for reference only. Dimensioning and tolerancing per ASME Y14.5M.
2. This drawing is subject to change without notice.

# EXAMPLE BOARD LAYOUT

## DSE0006A

## WSON - 0.8 mm max height

PLASTIC SMALL OUTLINE - NO LEAD

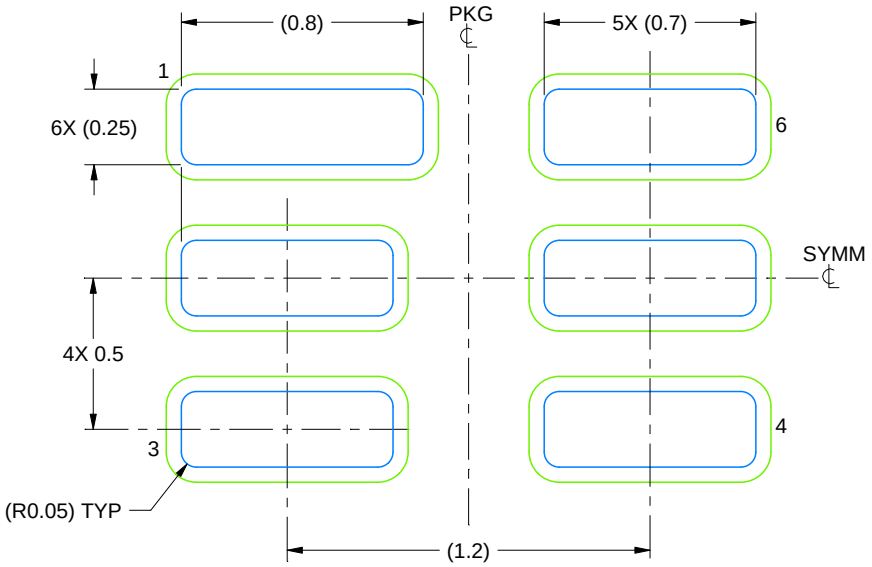


LAND PATTERN EXAMPLE
SCALE:40X

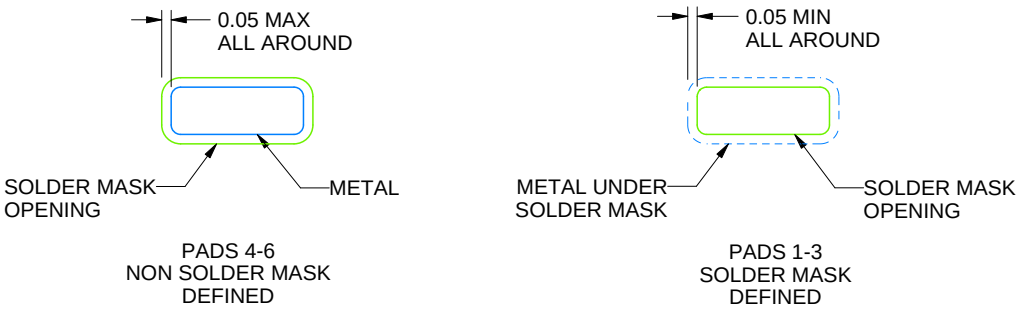


SOLDER MASK DETAILS

4220552/B 01/2024

NOTES: (continued)

3. For more information, see Texas Instruments literature number SLUA271 (www.ti.com/lit/slua271).

# EXAMPLE STENCIL DESIGN

## DSE0006A

## WSON - 0.8 mm max height

PLASTIC SMALL OUTLINE - NO LEAD

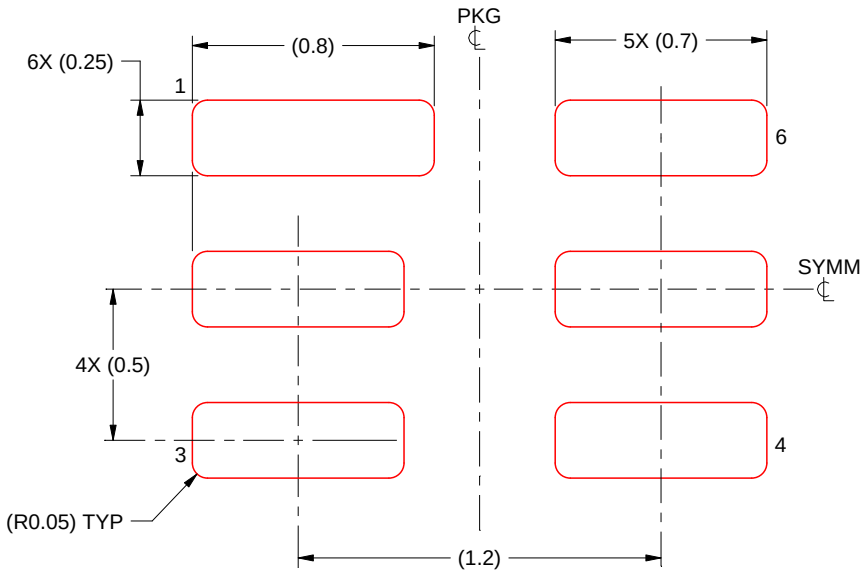


SOLDER PASTE EXAMPLE
BASED ON 0.125 mm THICK STENCIL
SCALE:40X

NOTES: (continued)

4. Laser cutting apertures with trapezoidal walls and rounded corners may offer better paste release. IPC-7525 may have alternate design recommendations.

# PACKAGE OUTLINE

## DDC0005A

## SOT-23 - 1.1 max height

SMALL OUTLINE TRANSISTOR

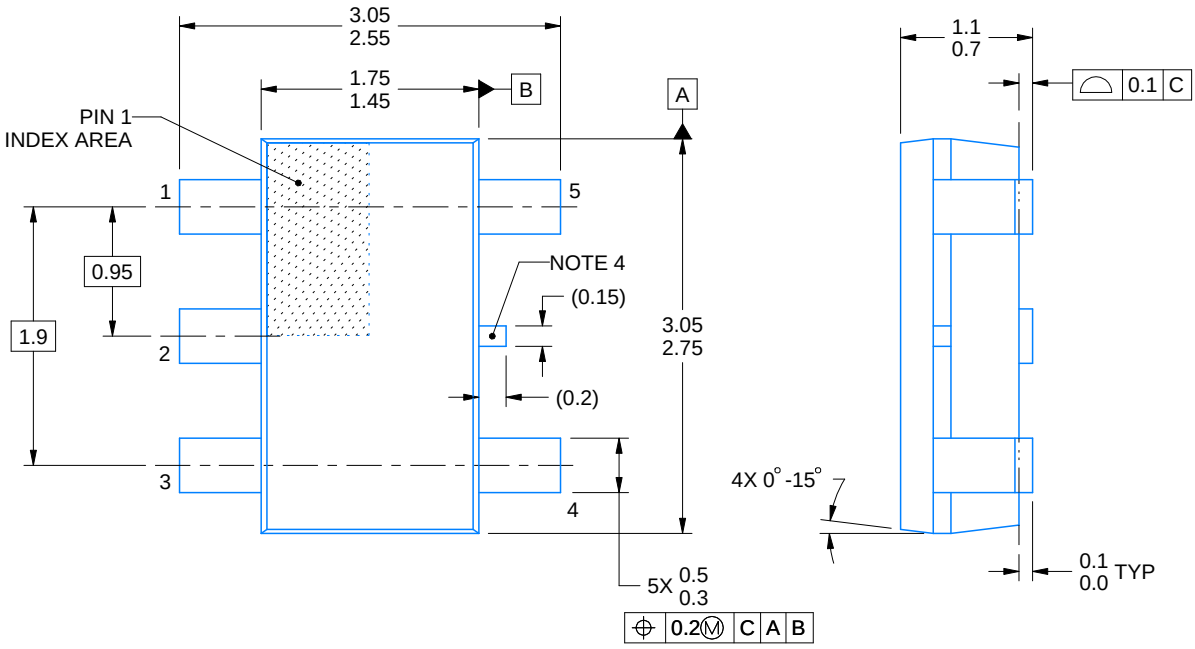


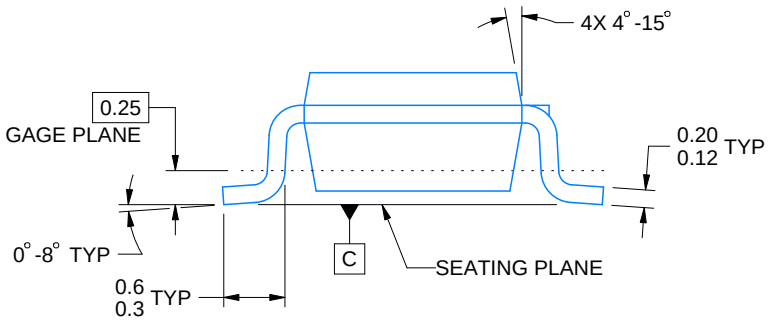


4220752/C 08/2024

NOTES:

1. All linear dimensions are in millimeters. Any dimensions in parenthesis are for reference only. Dimensioning and tolerancing per ASME Y14.5M.
2. This drawing is subject to change without notice.
3. Reference JEDEC MO-193.
4. Support pin may differ or may not be present.

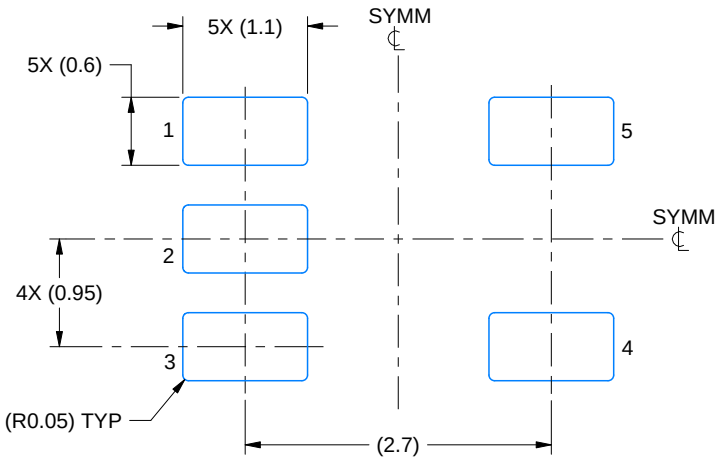


LAND PATTERN EXAMPLE
EXPLOSED METAL SHOWN
SCALE:15X

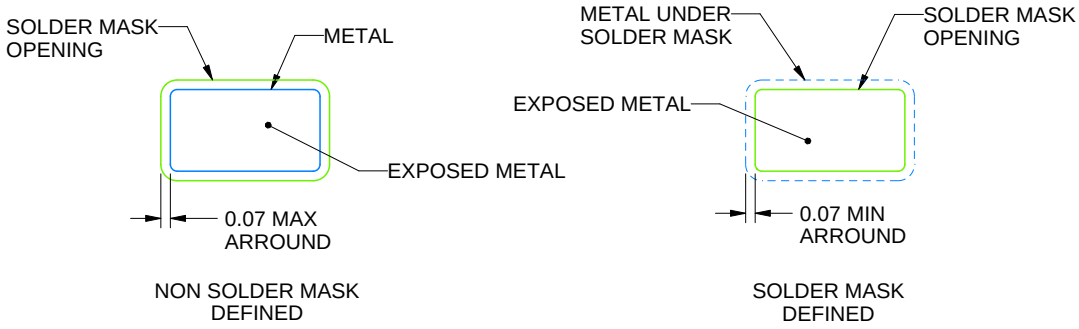


SOLDERMASK DETAILS

4220752/C 08/2024

NOTES: (continued)

4. Publication IPC-7351 may have alternate designs.
5. Solder mask tolerances between and around signal pads can vary based on board fabrication site.

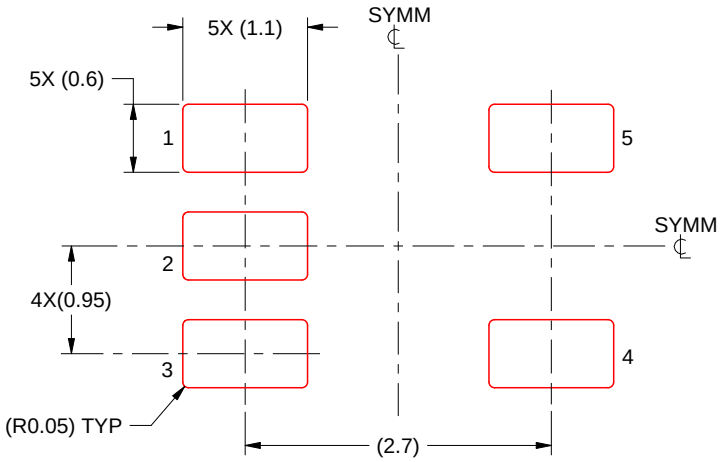


SOLDER PASTE EXAMPLE
BASED ON 0.125 THICK STENCIL
SCALE:15X

4220752/C 08/2024

NOTES: (continued)

6. Laser cutting apertures with trapezoidal walls and rounded corners may offer better paste release. IPC-7525 may have alternate design recommendations.
7. Board assembly site may have different recommendations for stencil design.

# IMPORTANT NOTICE AND DISCLAIMER

TI PROVIDES TECHNICAL AND RELIABILITY DATA (INCLUDING DATASHEETS), DESIGN RESOURCES (INCLUDING REFERENCE DESIGNS), APPLICATION OR OTHER DESIGN ADVICE, WEB TOOLS, SAFETY INFORMATION, AND OTHER RESOURCES “AS IS” AND WITH ALL FAULTS, AND DISCLAIMS ALL WARRANTIES, EXPRESS AND IMPLIED, INCLUDING WITHOUT LIMITATION ANY IMPLIED WARRANTIES OF MERCHANTABILITY, FITNESS FOR A PARTICULAR PURPOSE OR NON-INFRINGEMENT OF THIRD PARTY INTELLECTUAL PROPERTY RIGHTS.

These resources are intended for skilled developers designing with TI products. You are solely responsible for (1) selecting the appropriate TI products for your application, (2) designing, validating and testing your application, and (3) ensuring your application meets applicable standards, and any other safety, security, regulatory or other requirements.

These resources are subject to change without notice. TI grants you permission to use these resources only for development of an application that uses the TI products described in the resource. Other reproduction and display of these resources is prohibited. No license is granted to any other TI intellectual property right or to any third party intellectual property right. TI disclaims responsibility for, and you fully indemnify TI and its representatives against any claims, damages, costs, losses, and liabilities arising out of your use of these resources.

TI’s products are provided subject to TI’s Terms of Sale, TI’s General Quality Guidelines, or other applicable terms available either on ti.com or provided in conjunction with such TI products. TI’s provision of these resources does not expand or otherwise alter TI’s applicable warranties or warranty disclaimers for TI products. Unless TI explicitly designates a product as custom or customer-specified, TI products are standard, catalog, general purpose devices.

TI objects to and rejects any additional or different terms you may propose.

Copyright © 2026, Texas Instruments Incorporated

Last updated 10/2025

ENTEGRECİ

Bu belge www.entegreci.com üzerinden sunulmaktadır.

# Elektronik komponent tedarikinde Entegreci

Entegreci, Eskişehir merkezli, Türkiye geneline satış yapan bir elektronik komponent mağazasıdır. Entegreler (IC), mikrodenetleyiciler, transistörler, diyotlar, pasif elemanlar, konnektörler, modüller ve geliştirme kartları tek adetten seri üretim adetlerine kadar satılır. Ürün sayfalarında güncel stok durumunu, fiyatı ve datasheet bağlantısını bulabilirsiniz.

### Parça koduyla arama

Üretici parça numarasını yazın; stok ve fiyatı hemen görün.

**www.entegreci.com**

### Ürün kategorileri

Entegreden kapasitöre tüm elektronik komponent kategorileri.

**Kategorilere göz atın**

### Üreticiler

Aradığınız üreticinin ürünlerini tek sayfada inceleyin.

**Üreticileri görün**

### Toplu alım ve teklif

Listede olmayan ya da yüksek adetli parçalar için teklif isteyin.

**Teklif isteyin**

**www.entegreci.com** | **destek@entegreci.com** | **0850 305 90 34**

Entegreci is an online electronic components store based in Türkiye. Search by manufacturer part number to see stock, prices and datasheets for integrated circuits, microcontrollers, transistors, passive components and connectors, or request a quote for parts that are not listed.

Bu sayfa Entegreci tarafından eklenmiştir. Belgenin önceki sayfaları asıl yayıncısına aittir ve içeriği değiştirilmemiştir; en güncel sürüm için belgenin yayıncısına başvurun.