TPS650332-Q1 Automotive Camera PMIC

1 Features

- Qualified for automotive applications
- Systematic capability of up to ASIL D and SIL 3 targeted
- Hardware integrity up to ASIL B and SIL 2 targeted
- Advanced diagnostics and protection
- AEC-Q100 grade 1 qualified
  - -40°C to +125°C ambient operating temperature range
- Three step-down converters:
  - BUCK1 V_{IN} range from 4.0 V to 18.3 V
  - BUCK1 V_{OUT} range from 2.5 V to 4.0 V
  - BUCK1 output current up to 1500-mA
  - BUCK2 and BUCK3 V_{IN} range from 2.5 V to 5.5 V
  - BUCK2 and BUCK3 V_{OUT} range from 0.9 V to 1.9 V
  - BUCK2 and BUCK3 output current up to 1200-mA
  - Spread-spectrum clock (SSC) generation for reduced EMI
  - 2.3-MHz forced fixed switching frequency PWM operation
- One low dropout (LDO) regulator:
  - V_{IN} range from 2.5 V to 5.5 V
  - V_{OUT} range from 1.8 V to 3.3 V
  - Low noise and high PSRR
  - Adjustable output voltage through I^2C
  - Up to 300-mA output current
- 4.0-mm × 4.0-mm 24-pin VQFN with wettable flanks

2 Applications

- Automotive camera modules
  - Surround view camera modules
  - Rear view camera modules
  - Driver monitor camera modules
  - Power over coax (POC) camera modules
  - E-mirror camera modules
  - Front view camera modules

3 Description

The TPS650332-Q1 device is a highly integrated power management IC for automotive camera modules. This device combines three step-down converters and one low-dropout (LDO) regulator. The BUCK1 step-down converter has an input voltage range up to 18.3 V for connections to power over coax (PoC). All converters operate in a forced fixed-frequency PWM mode. The LDO can supply 300 mA and operate with an input voltage range from 2.5 V to 5.5 V. The step-down converters and the LDO have separate voltage inputs that enable maximum design and sequencing flexibility.

The TPS650332-Q1 is available in a 24-pin VQFN package (4.00 mm × 4.00 mm).

Device Information

PART NUMBER(1)	PACKAGE	BODY SIZE (NOM)
TPS650332-Q1	VQFN (24)	4.00 mm × 4.00 mm

(1) For all available packages, see the orderable addendum at the end of the data sheet.

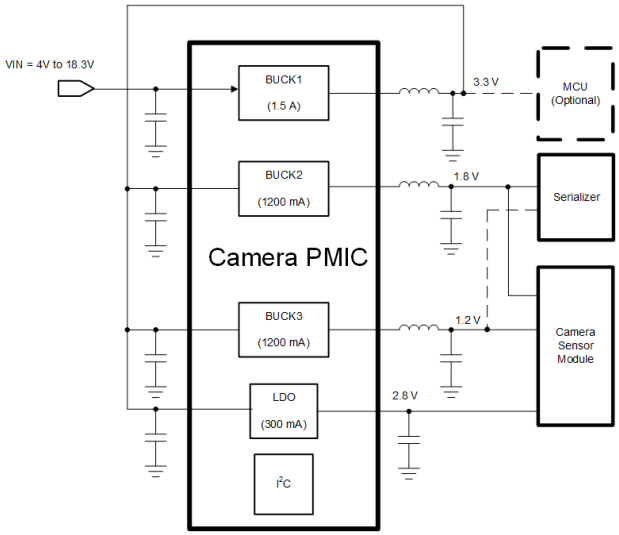

TPS650332-Q1 Application Circuit

An IMPORTANT NOTICE at the end of this data sheet addresses availability, warranty, changes, use in safety-critical applications, intellectual property matters and other important disclaimers. PRODUCTION DATA.

Table of Contents

1 Features....1
2 Applications....1
3 Description....1
4 Revision History....2
5 Device and Documentation Support....3
5.1 Device Support....3
5.2 Receiving Notification of Documentation Updates....3
5.3 Support Resources....3
5.4 Trademarks....3
5.5 Electrostatic Discharge Caution....3
5.6 Glossary....3
6 Mechanical, Packaging, and Orderable Information....3

4 Revision History

NOTE: Page numbers for previous revisions may differ from page numbers in the current version.

DATE	REVISION	NOTES
September 2023	*	Initial Release

Copyright © 2023 Texas Instruments Incorporated

5 Device and Documentation Support

5.1 Device Support

5.1.1 Third-Party Products Disclaimer

TI'S PUBLICATION OF INFORMATION REGARDING THIRD-PARTY PRODUCTS OR SERVICES DOES NOT CONSTITUTE AN ENDORSEMENT REGARDING THE SUITABILITY OF SUCH PRODUCTS OR SERVICES OR A WARRANTY, REPRESENTATION OR ENDORSEMENT OF SUCH PRODUCTS OR SERVICES, EITHER ALONE OR IN COMBINATION WITH ANY TI PRODUCT OR SERVICE.

5.2 Receiving Notification of Documentation Updates

To receive notification of documentation updates, navigate to the device product folder on ti.com. Click on *Subscribe to updates* to register and receive a weekly digest of any product information that has changed. For change details, review the revision history included in any revised document.

5.3 Support Resources

TI E2E™ support forums are an engineer's go-to source for fast, verified answers and design help — straight from the experts. Search existing answers or ask your own question to get the quick design help you need.

Linked content is provided "AS IS" by the respective contributors. They do not constitute TI specifications and do not necessarily reflect TI's views; see TI's Terms of Use.

5.4 Trademarks

TI E2E™ is a trademark of Texas Instruments.
All trademarks are the property of their respective owners.

5.5 Electrostatic Discharge Caution



This integrated circuit can be damaged by ESD. Texas Instruments recommends that all integrated circuits be handled with appropriate precautions. Failure to observe proper handling and installation procedures can cause damage.

ESD damage can range from subtle performance degradation to complete device failure. Precision integrated circuits may be more susceptible to damage because very small parametric changes could cause the device not to meet its published specifications.

5.6 Glossary

TI Glossary	This glossary lists and explains terms, acronyms, and definitions.

6 Mechanical, Packaging, and Orderable Information

The following pages include mechanical, packaging, and orderable information. This information is the most current data available for the designated devices. This data is subject to change without notice and revision of this document. For browser-based versions of this data sheet, refer to the left-hand navigation.

Copyright © 2023 Texas Instruments Incorporated

PACKAGING INFORMATION

Orderable part number	Status (1)	Material type (2)	Package | Pins	Package qty | Carrier	RoHS (3)	Lead finish/ Ball material (4)	MSL rating/ Peak reflow (5)	Op temp (°C)	Part marking (6)
TPS65033200RGERQ1	Active	Production	VQFN (RGE) | 24	3000 | LARGE T&R	Yes	NIPDAU | SN	Level-3-260C-168 HR	-40 to 125	TPS6503 XXXX-Q1
TPS65033200RGERQ1.A	Active	Production	VQFN (RGE) | 24	3000 | LARGE T&R	Yes	NIPDAU	Level-3-260C-168 HR	-40 to 125	TPS6503 XXXX-Q1
TPS65033201RGERQ1	Active	Production	VQFN (RGE) | 24	3000 | LARGE T&R	Yes	NIPDAU | SN	Level-3-260C-168 HR	-40 to 125	TPS6503 3201-Q1
TPS65033201RGERQ1.A	Active	Production	VQFN (RGE) | 24	3000 | LARGE T&R	Yes	NIPDAU	Level-3-260C-168 HR	-40 to 125	TPS6503 3201-Q1
TPS65033203RGERQ1	Active	Production	VQFN (RGE) | 24	3000 | LARGE T&R	Yes	NIPDAU | SN	Level-3-260C-168 HR	-40 to 125	TPS6503 3203-Q1
TPS65033203RGERQ1.A	Active	Production	VQFN (RGE) | 24	3000 | LARGE T&R	Yes	NIPDAU	Level-3-260C-168 HR	-40 to 125	TPS6503 3203-Q1
TPS65033205QRGERQ1	Active	Production	VQFN (RGE) | 24	3000 | LARGE T&R	Yes	Call TI | Nipdau	Level-3-260C-168 HR	-40 to 125	TPS6503 3205-Q1
TPS65033205QRGERQ1.A	Active	Production	VQFN (RGE) | 24	3000 | LARGE T&R	Yes	NIPDAU	Level-3-260C-168 HR	-40 to 125	TPS6503 3205-Q1
TPS65033206RGERQ1	Active	Production	VQFN (RGE) | 24	3000 | LARGE T&R	Yes	NIPDAU | SN	Level-3-260C-168 HR	-40 to 125	TPS6503 3206-Q1
TPS65033206RGERQ1.A	Active	Production	VQFN (RGE) | 24	3000 | LARGE T&R	Yes	NIPDAU	Level-3-260C-168 HR	-40 to 125	TPS6503 3206-Q1
TPS65033207RGERQ1	Active	Production	VQFN (RGE) | 24	3000 | LARGE T&R	Yes	NIPDAU | SN	Level-3-260C-168 HR	-40 to 125	TPS6503 3207-Q1
TPS65033207RGERQ1.A	Active	Production	VQFN (RGE) | 24	3000 | LARGE T&R	Yes	NIPDAU	Level-3-260C-168 HR	-40 to 125	TPS6503 3207-Q1
TPS65033208CRGERQ1	Active	Production	VQFN (RGE) | 24	3000 | LARGE T&R	Yes	NIPDAU	Level-3-260C-168 HR	-40 to 125	TPS6503 3208CQ1
TPS65033208CRGERQ1.A	Active	Production	VQFN (RGE) | 24	3000 | LARGE T&R	Yes	NIPDAU	Level-3-260C-168 HR	-40 to 125	TPS6503 3208CQ1
TPS65033208RGERQ1	Active	Production	VQFN (RGE) | 24	3000 | LARGE T&R	Yes	Call TI | Nipdau	Level-3-260C-168 HR	-40 to 125	TPS6503 3208-Q1
TPS65033208RGERQ1.A	Active	Production	VQFN (RGE) | 24	3000 | LARGE T&R	Yes	NIPDAU	Level-3-260C-168 HR	-40 to 125	TPS6503 3208-Q1

Orderable part number	Status (1)	Material type (2)	Package | Pins	Package qty | Carrier	RoHS (3)	Lead finish/ Ball material (4)	MSL rating/ Peak reflow (5)	Op temp (°C)	Part marking (6)
TPS65033209QRGERQ1	Active	Production	VQFN (RGE) | 24	3000 | LARGE T&R	Yes	NIPDAU | SN	Level-3-260C-168 HR	-40 to 125	TPS6503 3209-Q1
TPS65033209QRGERQ1.A	Active	Production	VQFN (RGE) | 24	3000 | LARGE T&R	Yes	NIPDAU	Level-3-260C-168 HR	-40 to 125	TPS6503 3209-Q1
TPS6503320AARGERQ1	Active	Production	VQFN (RGE) | 24	3000 | LARGE T&R	Yes	NIPDAU | SN	Level-3-260C-168 HR	-40 to 125	TPS6503 320AAQ1
TPS6503320AARGERQ1.A	Active	Production	VQFN (RGE) | 24	3000 | LARGE T&R	Yes	NIPDAU	Level-3-260C-168 HR	-40 to 125	TPS6503 320AAQ1
TPS6503320CCRGERQ1	Active	Production	VQFN (RGE) | 24	3000 | LARGE T&R	Yes	NIPDAU	Level-3-260C-168 HR	-40 to 125	TPS6503 320CCQ1
TPS6503320CCRGERQ1.A	Active	Production	VQFN (RGE) | 24	3000 | LARGE T&R	Yes	NIPDAU	Level-3-260C-168 HR	-40 to 125	TPS6503 320CCQ1
TPS6503320CRGERQ1	Active	Production	VQFN (RGE) | 24	3000 | LARGE T&R	Yes	SN	Level-3-260C-168 HR	-40 to 125	TPS6503 320C-Q1
TPS6503320CRGERQ1.A	Active	Production	VQFN (RGE) | 24	3000 | LARGE T&R	Yes	SN	Level-3-260C-168 HR	-40 to 125	TPS6503 320C-Q1
TPS6503320DCRGERQ1	Active	Production	VQFN (RGE) | 24	3000 | LARGE T&R	Yes	NIPDAU	Level-3-260C-168 HR	-40 to 125	TPS6503 320DCQ1
TPS6503320DCRGERQ1.A	Active	Production	VQFN (RGE) | 24	3000 | LARGE T&R	Yes	NIPDAU	Level-3-260C-168 HR	-40 to 125	TPS6503 320DCQ1
TPS6503320DRGERQ1	Active	Production	VQFN (RGE) | 24	3000 | LARGE T&R	Yes	NIPDAU | SN	Level-3-260C-168 HR	-40 to 125	TPS6503 320D-Q1
TPS6503320DRGERQ1.A	Active	Production	VQFN (RGE) | 24	3000 | LARGE T&R	Yes	NIPDAU	Level-3-260C-168 HR	-40 to 125	TPS6503 320D-Q1
TPS6503320FCRGERQ1	Active	Production	VQFN (RGE) | 24	3000 | LARGE T&R	Yes	NIPDAU	Level-3-260C-168 HR	-40 to 125	TPS6503 320FCQ1
TPS6503320FCRGERQ1.A	Active	Production	VQFN (RGE) | 24	3000 | LARGE T&R	Yes	NIPDAU	Level-3-260C-168 HR	-40 to 125	TPS6503 320FCQ1
TPS6503320FRGERQ1	Active	Production	VQFN (RGE) | 24	3000 | LARGE T&R	Yes	Call TI | Nipdau	Level-3-260C-168 HR	-40 to 125	TPS6503 320F-Q1
TPS6503320FRGERQ1.A	Active	Production	VQFN (RGE) | 24	3000 | LARGE T&R	Yes	NIPDAU	Level-3-260C-168 HR	-40 to 125	TPS6503 320F-Q1
TPS6503320GRGERQ1	Active	Production	VQFN (RGE) | 24	3000 | LARGE T&R	Yes	NIPDAU | SN	Level-3-260C-168 HR	-40 to 125	TPS6503 320G-Q1

Orderable part number	Status (1)	Material type (2)	Package | Pins	Package qty | Carrier	RoHS (3)	Lead finish/ Ball material (4)	MSL rating/ Peak reflow (5)	Op temp (°C)	Part marking (6)
TPS6503320GRGERQ1.A	Active	Production	VQFN (RGE) | 24	3000 | LARGE T&R	Yes	NIPDAU	Level-3-260C-168 HR	-40 to 125	TPS6503 320G-Q1
TPS6503320HARGERQ1	Active	Production	VQFN (RGE) | 24	3000 | LARGE T&R	Yes	NIPDAU | SN	Level-3-260C-168 HR	-40 to 125	TPS6503 320HAQ1
TPS6503320HARGERQ1.A	Active	Production	VQFN (RGE) | 24	3000 | LARGE T&R	Yes	NIPDAU	Level-3-260C-168 HR	-40 to 125	TPS6503 320HAQ1
TPS6503320KRGERQ1	Active	Production	VQFN (RGE) | 24	3000 | LARGE T&R	Yes	NIPDAU | SN	Level-3-260C-168 HR	-40 to 125	TPS6503 320K-Q1
TPS6503320KRGERQ1.A	Active	Production	VQFN (RGE) | 24	3000 | LARGE T&R	Yes	NIPDAU	Level-3-260C-168 HR	-40 to 125	TPS6503 320K-Q1
TPS6503320MRGERQ1	Active	Production	VQFN (RGE) | 24	3000 | LARGE T&R	Yes	NIPDAU | SN	Level-3-260C-168 HR	-40 to 125	TPS6503 320M-Q1
TPS6503320MRGERQ1.A	Active	Production	VQFN (RGE) | 24	3000 | LARGE T&R	Yes	NIPDAU	Level-3-260C-168 HR	-40 to 125	TPS6503 320M-Q1
TPS6503320NCRGERQ1	Active	Production	VQFN (RGE) | 24	3000 | LARGE T&R	Yes	NIPDAU	Level-3-260C-168 HR	-40 to 125	TPS6503 320NCQ1
TPS6503320NCRGERQ1.A	Active	Production	VQFN (RGE) | 24	3000 | LARGE T&R	Yes	NIPDAU	Level-3-260C-168 HR	-40 to 125	TPS6503 320NCQ1
TPS6503320NRGERQ1	Active	Production	VQFN (RGE) | 24	3000 | LARGE T&R	Yes	NIPDAU | SN	Level-3-260C-168 HR	-40 to 125	TPS6503 320N-Q1
TPS6503320NRGERQ1.A	Active	Production	VQFN (RGE) | 24	3000 | LARGE T&R	Yes	NIPDAU	Level-3-260C-168 HR	-40 to 125	TPS6503 320N-Q1
TPS6503320PRGERQ1	Active	Production	VQFN (RGE) | 24	3000 | LARGE T&R	Yes	NIPDAU | SN	Level-3-260C-168 HR	-40 to 125	TPS6503 320P-Q1
TPS6503320PRGERQ1.A	Active	Production	VQFN (RGE) | 24	3000 | LARGE T&R	Yes	NIPDAU	Level-3-260C-168 HR	-40 to 125	TPS6503 320P-Q1
TPS65033218CRGERQ1	Active	Production	VQFN (RGE) | 24	3000 | LARGE T&R	Yes	NIPDAU	Level-3-260C-168 HR	-40 to 125	TPS6503 3218CQ1
TPS6503321MCRGERQ1	Active	Production	VQFN (RGE) | 24	3000 | LARGE T&R	Yes	NIPDAU	Level-3-260C-168 HR	-40 to 125	TPS6503 321MCQ1
TPS6503321MCRGERQ1.A	Active	Production	VQFN (RGE) | 24	3000 | LARGE T&R	Yes	NIPDAU	Level-3-260C-168 HR	-40 to 125	TPS6503 321MCQ1

(1) **Status:** For more details on status, see our product life cycle.

(2) **Material type:** When designated, preproduction parts are prototypes/experimental devices, and are not yet approved or released for full production. Testing and final process, including without limitation quality assurance, reliability performance testing, and/or process qualification, may not yet be complete, and this item is subject to further changes or possible discontinuation. If available for ordering, purchases will be subject to an additional waiver at checkout, and are intended for early internal evaluation purposes only. These items are sold without warranties of any kind.

(3) **RoHS values:** Yes, No, RoHS Exempt. See the TI RoHS Statement for additional information and value definition.

(4) **Lead finish/Ball material:** Parts may have multiple material finish options. Finish options are separated by a vertical ruled line. Lead finish/Ball material values may wrap to two lines if the finish value exceeds the maximum column width.

(5) **MSL rating/Peak reflow:** The moisture sensitivity level ratings and peak solder (reflow) temperatures. In the event that a part has multiple moisture sensitivity ratings, only the lowest level per JEDEC standards is shown. Refer to the shipping label for the actual reflow temperature that will be used to mount the part to the printed circuit board.

(6) **Part marking:** There may be an additional marking, which relates to the logo, the lot trace code information, or the environmental category of the part.

Multiple part markings will be inside parentheses. Only one part marking contained in parentheses and separated by a "~" will appear on a part. If a line is indented then it is a continuation of the previous line and the two combined represent the entire part marking for that device.

Important Information and Disclaimer: The information provided on this page represents TI's knowledge and belief as of the date that it is provided. TI bases its knowledge and belief on information provided by third parties, and makes no representation or warranty as to the accuracy of such information. Efforts are underway to better integrate information from third parties. TI has taken and continues to take reasonable steps to provide representative and accurate information but may not have conducted destructive testing or chemical analysis on incoming materials and chemicals. TI and TI suppliers consider certain information to be proprietary, and thus CAS numbers and other limited information may not be available for release.

In no event shall TI's liability arising out of such information exceed the total purchase price of the TI part(s) at issue in this document sold by TI to Customer on an annual basis.

TAPE AND REEL INFORMATION

REEL DIMENSIONS

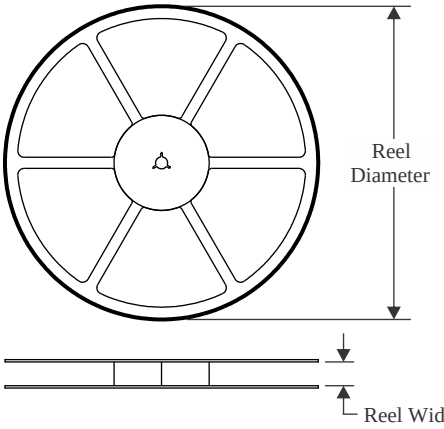

TAPE DIMENSIONS

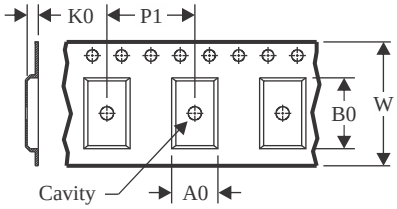

A0	Dimension designed to accommodate the component width
B0	Dimension designed to accommodate the component length
K0	Dimension designed to accommodate the component thickness
W	Overall width of the carrier tape
P1	Pitch between successive cavity centers

QUADRANT ASSIGNMENTS FOR PIN 1 ORIENTATION IN TAPE

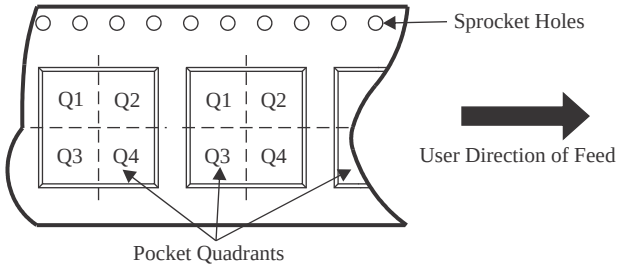

*All dimensions are nominal

Device	Package Type	Package Drawing	Pins	SPQ	Reel Diameter (mm)	Reel Width W1 (mm)	A0 (mm)	B0 (mm)	K0 (mm)	P1 (mm)	W (mm)	Pin1 Quadrant
TPS65033200RGERQ1	VQFN	RGE	24	3000	330.0	12.4	4.25	4.25	1.15	8.0	12.0	Q2
TPS65033200RGERQ1	VQFN	RGE	24	3000	330.0	12.4	4.3	4.3	1.1	8.0	12.0	Q2
TPS65033201RGERQ1	VQFN	RGE	24	3000	330.0	12.4	4.3	4.3	1.1	8.0	12.0	Q2
TPS65033201RGERQ1	VQFN	RGE	24	3000	330.0	12.4	4.25	4.25	1.15	8.0	12.0	Q2
TPS65033203RGERQ1	VQFN	RGE	24	3000	330.0	12.4	4.25	4.25	1.15	8.0	12.0	Q2
TPS65033203RGERQ1	VQFN	RGE	24	3000	330.0	12.4	4.3	4.3	1.1	8.0	12.0	Q2
TPS65033205QRGERQ1	VQFN	RGE	24	3000	330.0	12.4	4.25	4.25	1.15	8.0	12.0	Q2
TPS65033205QRGERQ1	VQFN	RGE	24	3000	330.0	12.4	4.3	4.3	1.1	8.0	12.0	Q2
TPS65033205QRGERQ1	VQFN	RGE	24	3000	330.0	12.4	4.25	4.25	1.15	8.0	12.0	Q2
TPS65033206RGERQ1	VQFN	RGE	24	3000	330.0	12.4	4.3	4.3	1.1	8.0	12.0	Q2
TPS65033206RGERQ1	VQFN	RGE	24	3000	330.0	12.4	4.25	4.25	1.15	8.0	12.0	Q2
TPS65033207RGERQ1	VQFN	RGE	24	3000	330.0	12.4	4.25	4.25	1.15	8.0	12.0	Q2
TPS65033207RGERQ1	VQFN	RGE	24	3000	330.0	12.4	4.3	4.3	1.1	8.0	12.0	Q2
TPS65033208CRGERQ1	VQFN	RGE	24	3000	330.0	12.4	4.25	4.25	1.15	8.0	12.0	Q2
TPS65033208RGERQ1	VQFN	RGE	24	3000	330.0	12.4	4.3	4.3	1.1	8.0	12.0	Q2
TPS65033208RGERQ1	VQFN	RGE	24	3000	330.0	12.4	4.25	4.25	1.15	8.0	12.0	Q2

Device	Package Type	Package Drawing	Pins	SPQ	Reel Diameter (mm)	Reel Width W1 (mm)	A0 (mm)	B0 (mm)	K0 (mm)	P1 (mm)	W (mm)	Pin1 Quadrant
TPS65033209QRGERQ1	VQFN	RGE	24	3000	330.0	12.4	4.25	4.25	1.15	8.0	12.0	Q2
TPS65033209QRGERQ1	VQFN	RGE	24	3000	330.0	12.4	4.3	4.3	1.1	8.0	12.0	Q2
TPS6503320AARGERQ1	VQFN	RGE	24	3000	330.0	12.4	4.3	4.3	1.1	8.0	12.0	Q2
TPS6503320AARGERQ1	VQFN	RGE	24	3000	330.0	12.4	4.25	4.25	1.15	8.0	12.0	Q2
TPS6503320CCRGERQ1	VQFN	RGE	24	3000	330.0	12.4	4.25	4.25	1.15	8.0	12.0	Q2
TPS6503320CRGERQ1	VQFN	RGE	24	3000	330.0	12.4	4.3	4.3	1.1	8.0	12.0	Q2
TPS6503320DCRGERQ1	VQFN	RGE	24	3000	330.0	12.4	4.25	4.25	1.15	8.0	12.0	Q2
TPS6503320DRGERQ1	VQFN	RGE	24	3000	330.0	12.4	4.3	4.3	1.1	8.0	12.0	Q2
TPS6503320DRGERQ1	VQFN	RGE	24	3000	330.0	12.4	4.25	4.25	1.15	8.0	12.0	Q2
TPS6503320FCRGERQ1	VQFN	RGE	24	3000	330.0	12.4	4.25	4.25	1.15	8.0	12.0	Q2
TPS6503320FRGERQ1	VQFN	RGE	24	3000	330.0	12.4	4.25	4.25	1.15	8.0	12.0	Q2
TPS6503320FRGERQ1	VQFN	RGE	24	3000	330.0	12.4	4.25	4.25	1.15	8.0	12.0	Q2
TPS6503320FRGERQ1	VQFN	RGE	24	3000	330.0	12.4	4.3	4.3	1.1	8.0	12.0	Q2
TPS6503320GRGERQ1	VQFN	RGE	24	3000	330.0	12.4	4.25	4.25	1.15	8.0	12.0	Q2
TPS6503320GRGERQ1	VQFN	RGE	24	3000	330.0	12.4	4.3	4.3	1.1	8.0	12.0	Q2
TPS6503320HARGERQ1	VQFN	RGE	24	3000	330.0	12.4	4.25	4.25	1.15	8.0	12.0	Q2
TPS6503320HARGERQ1	VQFN	RGE	24	3000	330.0	12.4	4.3	4.3	1.1	8.0	12.0	Q2
TPS6503320KRGERQ1	VQFN	RGE	24	3000	330.0	12.4	4.25	4.25	1.15	8.0	12.0	Q2
TPS6503320KRGERQ1	VQFN	RGE	24	3000	330.0	12.4	4.3	4.3	1.1	8.0	12.0	Q2
TPS6503320MRGERQ1	VQFN	RGE	24	3000	330.0	12.4	4.3	4.3	1.1	8.0	12.0	Q2
TPS6503320NCRGERQ1	VQFN	RGE	24	3000	330.0	12.4	4.25	4.25	1.15	8.0	12.0	Q2
TPS6503320NRGERQ1	VQFN	RGE	24	3000	330.0	12.4	4.3	4.3	1.1	8.0	12.0	Q2
TPS6503320NRGERQ1	VQFN	RGE	24	3000	330.0	12.4	4.25	4.25	1.15	8.0	12.0	Q2
TPS6503320PRGERQ1	VQFN	RGE	24	3000	330.0	12.4	4.3	4.3	1.1	8.0	12.0	Q2
TPS6503320PRGERQ1	VQFN	RGE	24	3000	330.0	12.4	4.25	4.25	1.15	8.0	12.0	Q2
TPS65033218CRGERQ1	VQFN	RGE	24	3000	330.0	12.4	4.25	4.25	1.15	8.0	12.0	Q2
TPS6503321MCRGERQ1	VQFN	RGE	24	3000	330.0	12.4	4.25	4.25	1.15	8.0	12.0	Q2

TAPE AND REEL BOX DIMENSIONS

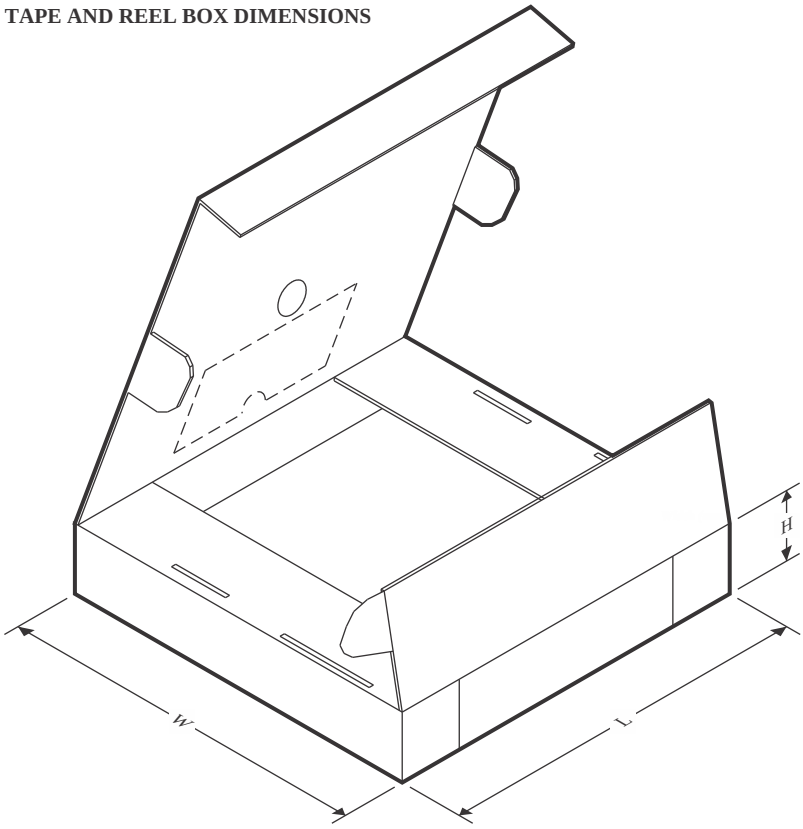

*All dimensions are nominal

Device	Package Type	Package Drawing	Pins	SPQ	Length (mm)	Width (mm)	Height (mm)
TPS65033200RGERQ1	VQFN	RGE	24	3000	367.0	367.0	35.0
TPS65033200RGERQ1	VQFN	RGE	24	3000	367.0	367.0	38.0
TPS65033201RGERQ1	VQFN	RGE	24	3000	367.0	367.0	38.0
TPS65033201RGERQ1	VQFN	RGE	24	3000	367.0	367.0	35.0
TPS65033203RGERQ1	VQFN	RGE	24	3000	367.0	367.0	35.0
TPS65033203RGERQ1	VQFN	RGE	24	3000	367.0	367.0	38.0
TPS65033205QRGERQ1	VQFN	RGE	24	3000	360.0	360.0	36.0
TPS65033205QRGERQ1	VQFN	RGE	24	3000	367.0	367.0	38.0
TPS65033205QRGERQ1	VQFN	RGE	24	3000	367.0	367.0	35.0
TPS65033206RGERQ1	VQFN	RGE	24	3000	367.0	367.0	38.0
TPS65033206RGERQ1	VQFN	RGE	24	3000	367.0	367.0	35.0
TPS65033207RGERQ1	VQFN	RGE	24	3000	367.0	367.0	35.0
TPS65033207RGERQ1	VQFN	RGE	24	3000	367.0	367.0	38.0
TPS65033208CRGERQ1	VQFN	RGE	24	3000	367.0	367.0	35.0
TPS65033208RGERQ1	VQFN	RGE	24	3000	367.0	367.0	38.0
TPS65033208RGERQ1	VQFN	RGE	24	3000	367.0	367.0	35.0
TPS65033209QRGERQ1	VQFN	RGE	24	3000	367.0	367.0	35.0
TPS65033209QRGERQ1	VQFN	RGE	24	3000	367.0	367.0	38.0

Device	Package Type	Package Drawing	Pins	SPQ	Length (mm)	Width (mm)	Height (mm)
TPS6503320AARGERQ1	VQFN	RGE	24	3000	367.0	367.0	38.0
TPS6503320AARGERQ1	VQFN	RGE	24	3000	367.0	367.0	35.0
TPS6503320CCRGERQ1	VQFN	RGE	24	3000	367.0	367.0	35.0
TPS6503320CRGERQ1	VQFN	RGE	24	3000	367.0	367.0	38.0
TPS6503320DCRGERQ1	VQFN	RGE	24	3000	367.0	367.0	35.0
TPS6503320DRGERQ1	VQFN	RGE	24	3000	367.0	367.0	38.0
TPS6503320DRGERQ1	VQFN	RGE	24	3000	367.0	367.0	35.0
TPS6503320FCRGERQ1	VQFN	RGE	24	3000	367.0	367.0	35.0
TPS6503320FRGERQ1	VQFN	RGE	24	3000	360.0	360.0	36.0
TPS6503320FRGERQ1	VQFN	RGE	24	3000	367.0	367.0	35.0
TPS6503320FRGERQ1	VQFN	RGE	24	3000	367.0	367.0	38.0
TPS6503320GRGERQ1	VQFN	RGE	24	3000	367.0	367.0	35.0
TPS6503320GRGERQ1	VQFN	RGE	24	3000	367.0	367.0	38.0
TPS6503320HARGERQ1	VQFN	RGE	24	3000	367.0	367.0	35.0
TPS6503320HARGERQ1	VQFN	RGE	24	3000	367.0	367.0	38.0
TPS6503320KRGERQ1	VQFN	RGE	24	3000	367.0	367.0	35.0
TPS6503320KRGERQ1	VQFN	RGE	24	3000	367.0	367.0	38.0
TPS6503320MRGERQ1	VQFN	RGE	24	3000	367.0	367.0	38.0
TPS6503320NCRGERQ1	VQFN	RGE	24	3000	367.0	367.0	35.0
TPS6503320NRGERQ1	VQFN	RGE	24	3000	367.0	367.0	38.0
TPS6503320NRGERQ1	VQFN	RGE	24	3000	367.0	367.0	35.0
TPS6503320PRGERQ1	VQFN	RGE	24	3000	367.0	367.0	38.0
TPS6503320PRGERQ1	VQFN	RGE	24	3000	367.0	367.0	35.0
TPS65033218CRGERQ1	VQFN	RGE	24	3000	360.0	360.0	36.0
TPS6503321MCRGERQ1	VQFN	RGE	24	3000	367.0	367.0	35.0

GENERIC PACKAGE VIEW

RGE 24 VQFN - 1 mm max height

PLASTIC QUAD FLATPACK - NO LEAD

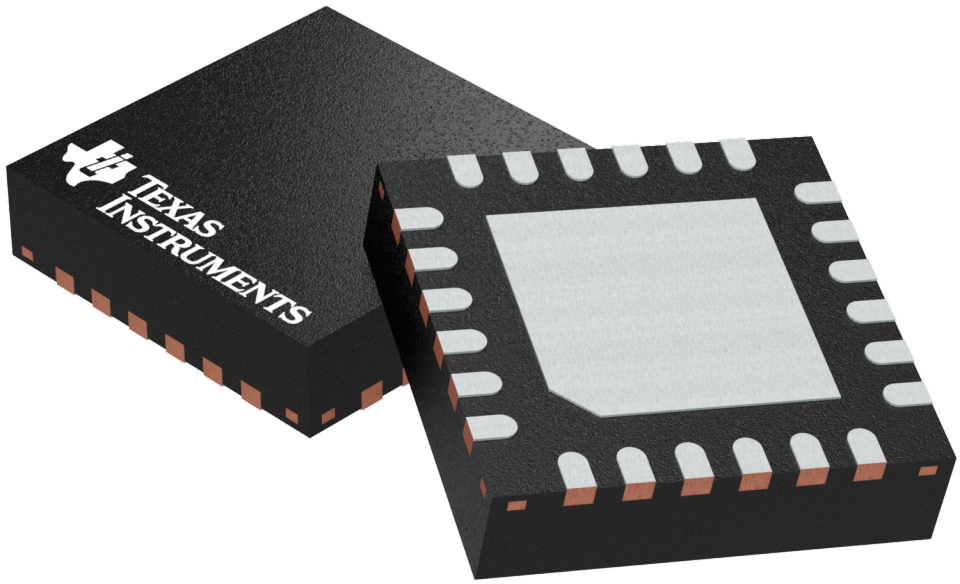

Images above are just a representation of the package family, actual package may vary.
Refer to the product data sheet for package details.

4204104/H

RGE0024U

PACKAGE OUTLINE

VQFN - 1 mm max height

PLASTIC QUAD FLATPACK - NO LEAD

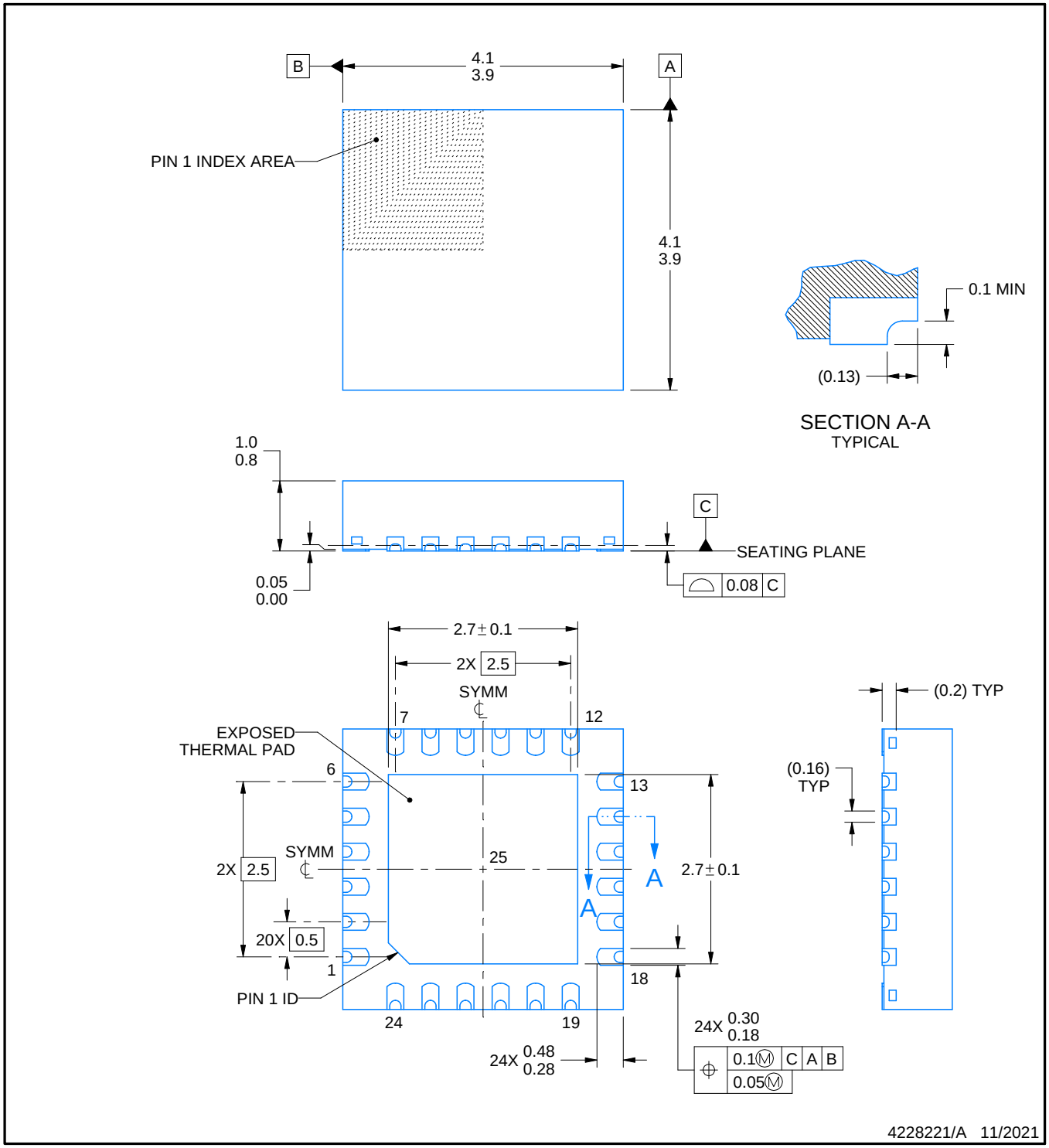

NOTES:

1. All linear dimensions are in millimeters. Any dimensions in parenthesis are for reference only. Dimensioning and tolerancing per ASME Y14.5M.
2. This drawing is subject to change without notice.
3. The package thermal pad must be soldered to the printed circuit board for thermal and mechanical performance.

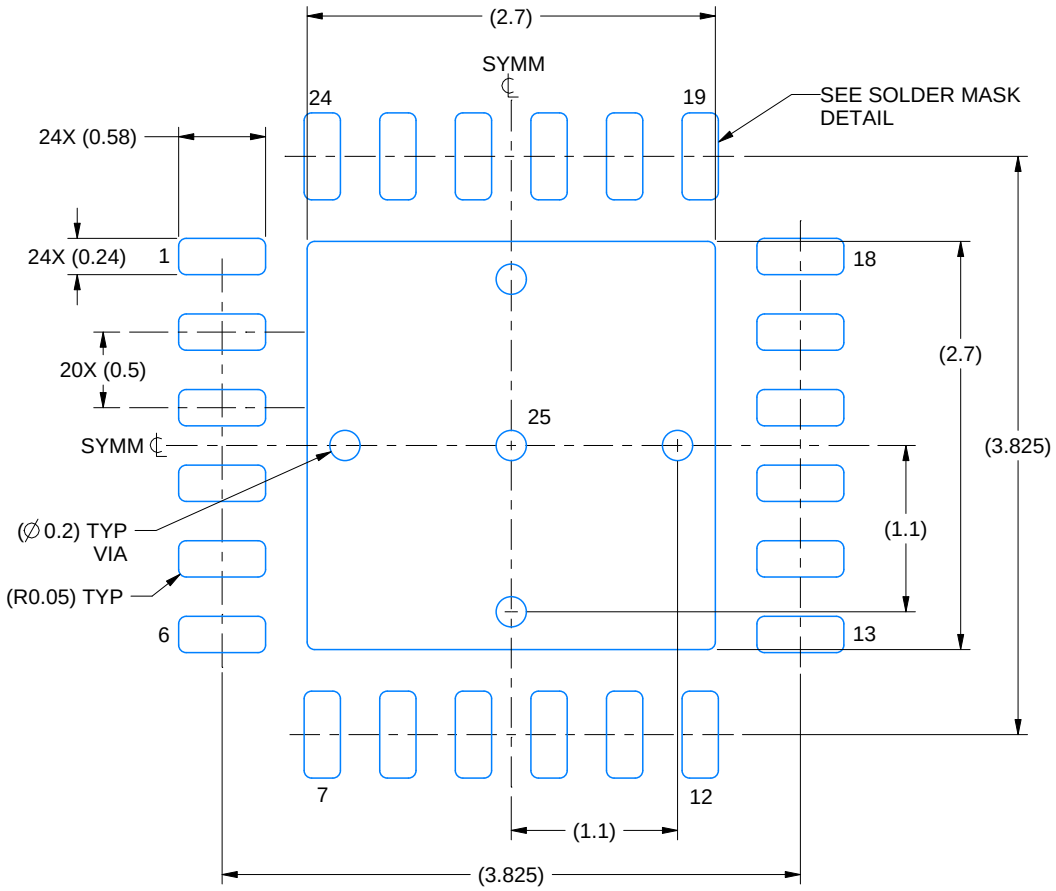

LAND PATTERN EXAMPLE
EXPOSED METAL SHOWN
SCALE: 20X

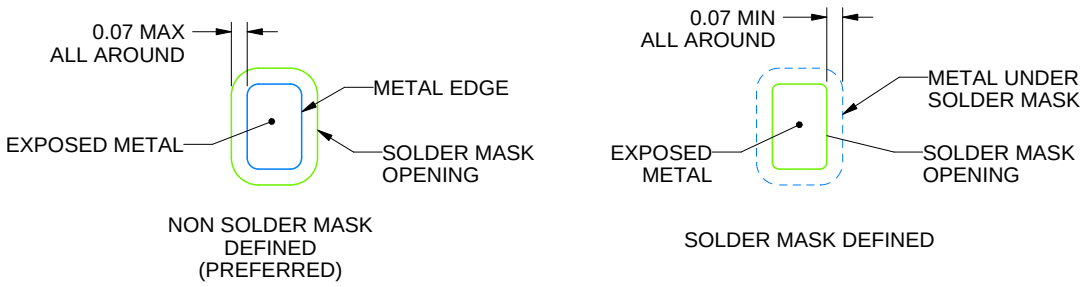

SOLDER MASK DETAILS

4228221/A 11/2021

NOTES: (continued)

4. This package is designed to be soldered to a thermal pad on the board. For more information, see Texas Instruments literature number SLUA271 (www.ti.com/lit/slua271).
5. Vias are optional depending on application, refer to device data sheet. If any vias are implemented, refer to their locations shown on this view. It is recommended that vias under paste be filled, plugged or tented.

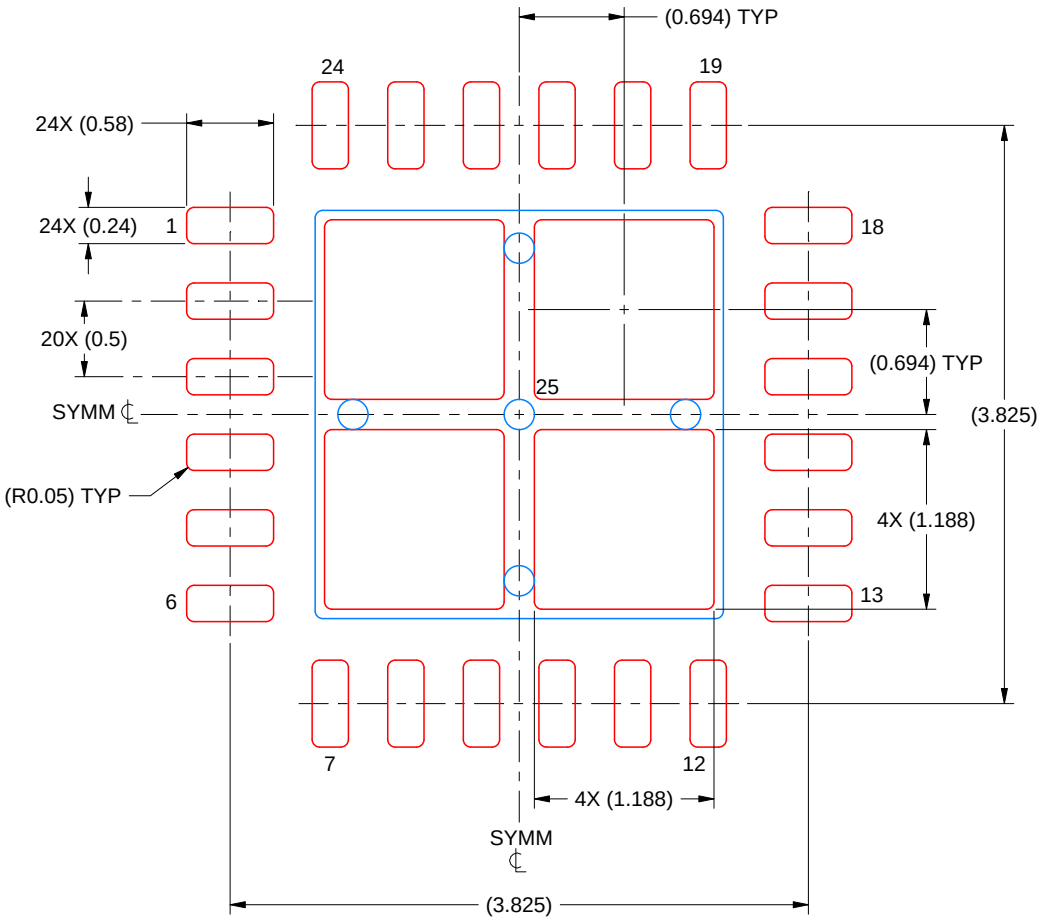

SOLDER PASTE EXAMPLE
BASED ON 0.125 MM THICK STENCIL
SCALE: 20X

EXPOSED PAD 25
77% PRINTED SOLDER COVERAGE BY AREA UNDER PACKAGE

4228221/A 11/2021

NOTES: (continued)

6. Laser cutting apertures with trapezoidal walls and rounded corners may offer better paste release. IPC-7525 may have alternate design recommendations.

PACKAGE OUTLINE

RGE0024K

VQFN - 1 mm max height

PLASTIC QUAD FLATPACK - NO LEAD

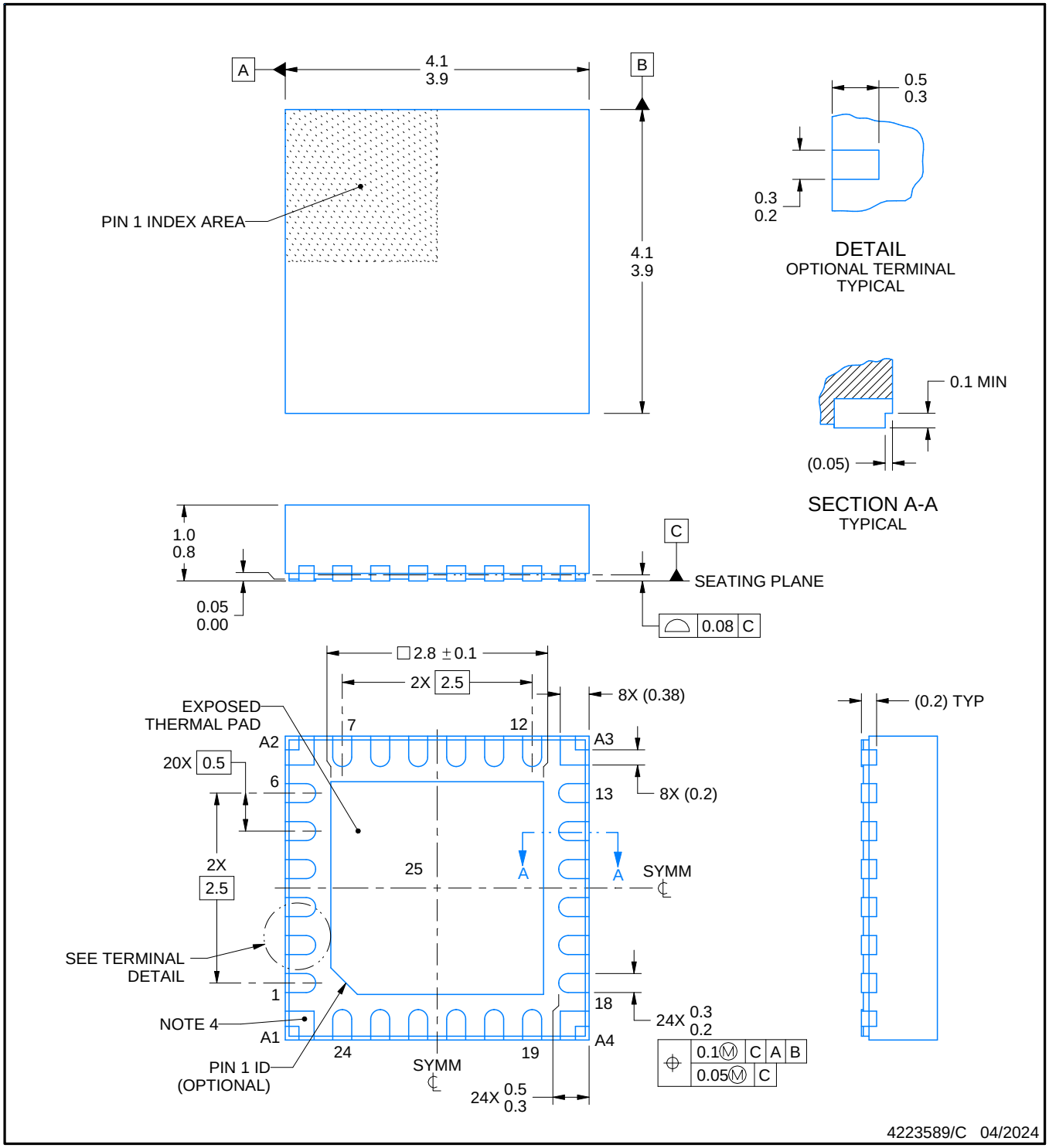

NOTES:

1. All linear dimensions are in millimeters. Any dimensions in parenthesis are for reference only. Dimensioning and tolerancing per ASME Y14.5M.
2. This drawing is subject to change without notice.
3. The package thermal pad must be soldered to the printed circuit board for thermal and mechanical performance.
4. Corner pins A1-A4 are physically connected to exposed thermal pad internally. Soldering these is optional, but would require customer to supply land design and stencil.

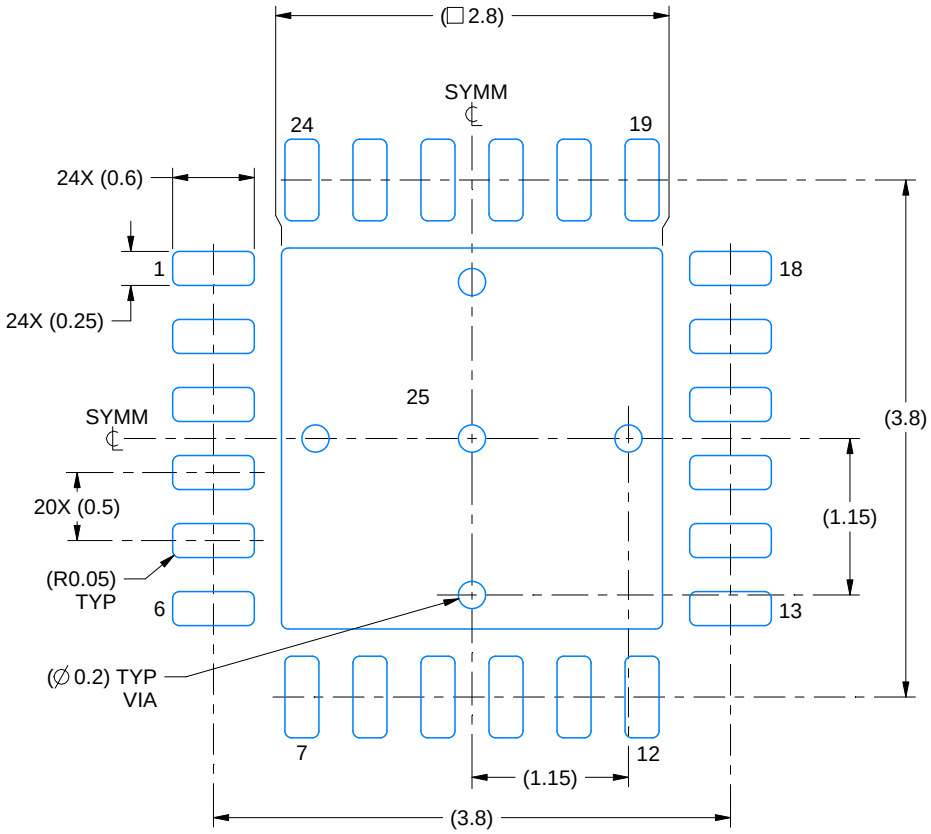

LAND PATTERN EXAMPLE
EXPOSED METAL SHOWN
SCALE:18X

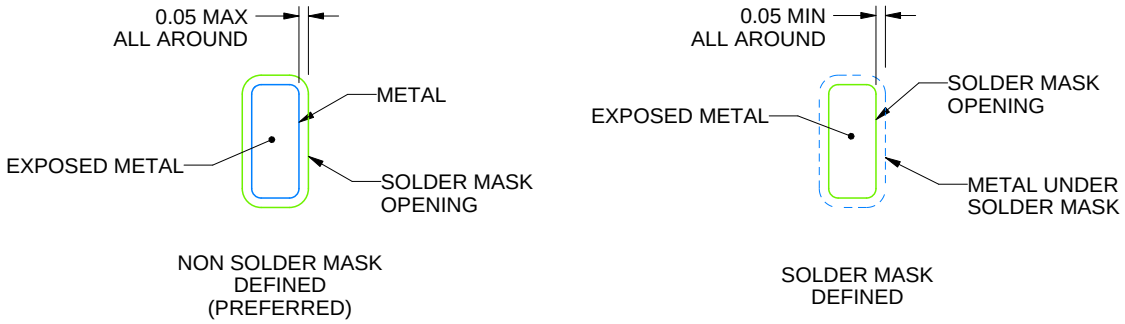

SOLDER MASK DETAILS

4223589/C 04/2024

NOTES: (continued)

5. This package is designed to be soldered to a thermal pad on the board. For more information, see Texas Instruments literature number SLUA271 (www.ti.com/lit/slua271).
6. Vias are optional depending on application, refer to device data sheet. If any vias are implemented, refer to their locations shown on this view. It is recommended that vias under paste be filled, plugged or tented.

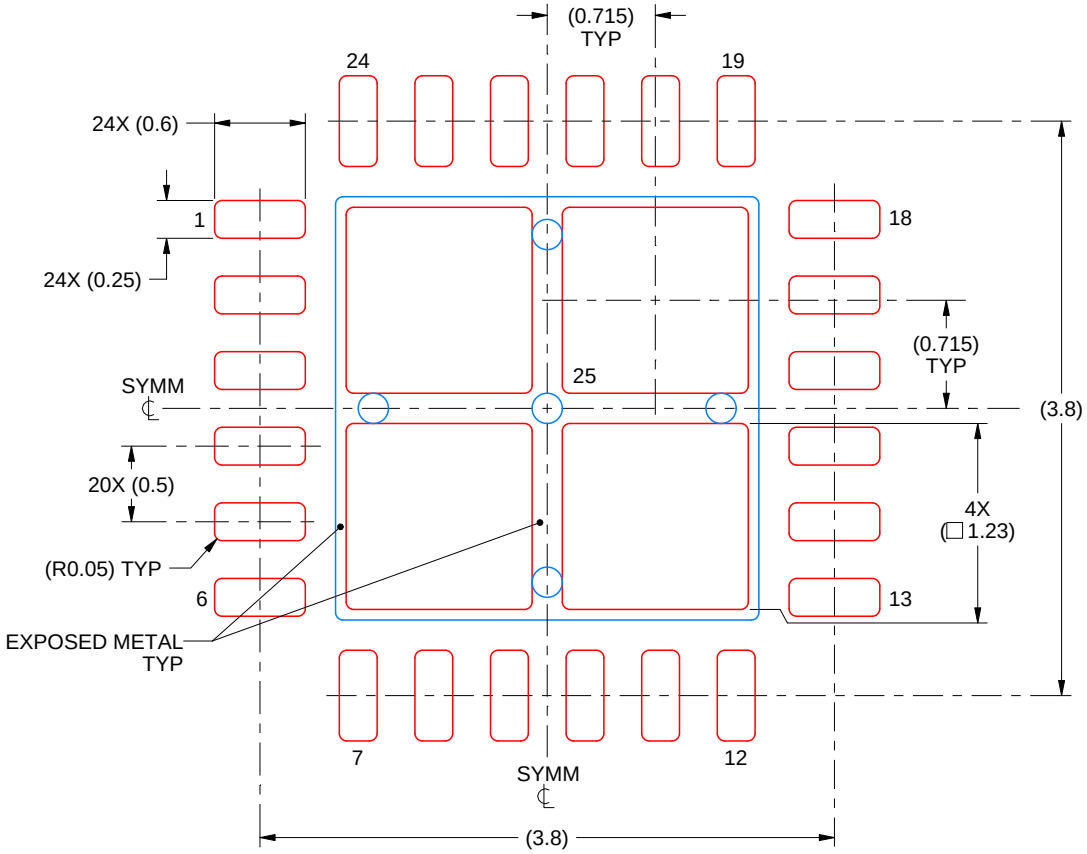

SOLDER PASTE EXAMPLE
BASED ON 0.1 mm THICK STENCIL

THERMAL PAD 25:
77% PRINTED SOLDER COVERAGE BY AREA UNDER PACKAGE
SCALE:20X

4223589/C 04/2024

NOTES: (continued)

7. Laser cutting apertures with trapezoidal walls and rounded corners may offer better paste release. IPC-7525 may have alternate design recommendations.

IMPORTANT NOTICE AND DISCLAIMER

TI PROVIDES TECHNICAL AND RELIABILITY DATA (INCLUDING DATASHEETS), DESIGN RESOURCES (INCLUDING REFERENCE DESIGNS), APPLICATION OR OTHER DESIGN ADVICE, WEB TOOLS, SAFETY INFORMATION, AND OTHER RESOURCES “AS IS” AND WITH ALL FAULTS, AND DISCLAIMS ALL WARRANTIES, EXPRESS AND IMPLIED, INCLUDING WITHOUT LIMITATION ANY IMPLIED WARRANTIES OF MERCHANTABILITY, FITNESS FOR A PARTICULAR PURPOSE OR NON-INFRINGEMENT OF THIRD PARTY INTELLECTUAL PROPERTY RIGHTS.

These resources are intended for skilled developers designing with TI products. You are solely responsible for (1) selecting the appropriate TI products for your application, (2) designing, validating and testing your application, and (3) ensuring your application meets applicable standards, and any other safety, security, regulatory or other requirements.

These resources are subject to change without notice. TI grants you permission to use these resources only for development of an application that uses the TI products described in the resource. Other reproduction and display of these resources is prohibited. No license is granted to any other TI intellectual property right or to any third party intellectual property right. TI disclaims responsibility for, and you fully indemnify TI and its representatives against any claims, damages, costs, losses, and liabilities arising out of your use of these resources.

TI’s products are provided subject to TI’s Terms of Sale, TI’s General Quality Guidelines, or other applicable terms available either on ti.com or provided in conjunction with such TI products. TI’s provision of these resources does not expand or otherwise alter TI’s applicable warranties or warranty disclaimers for TI products. Unless TI explicitly designates a product as custom or customer-specified, TI products are standard, catalog, general purpose devices.

TI objects to and rejects any additional or different terms you may propose.

Copyright © 2026, Texas Instruments Incorporated

Last updated 10/2025

ENTEGRECİ

Bu belge www.entegreci.com üzerinden sunulmaktadır.

Elektronik komponent tedarikinde Entegreci

Entegreci, Eskişehir merkezli, Türkiye geneline satış yapan bir elektronik komponent mağazasıdır. Entegreler (IC), mikrodenetleyiciler, transistörler, diyotlar, pasif elemanlar, konnektörler, modüller ve geliştirme kartları tek adetten seri üretim adetlerine kadar satılır. Ürün sayfalarında güncel stok durumunu, fiyatı ve datasheet bağlantısını bulabilirsiniz.

Parça koduyla arama

Üretici parça numarasını yazın; stok ve fiyatı hemen görün.

www.entegreci.com

Ürün kategorileri

Entegreden kapasitöre tüm elektronik komponent kategorileri.

Kategorilere göz atın

Üreticiler

Aradığınız üreticinin ürünlerini tek sayfada inceleyin.

Üreticileri görün

Toplu alım ve teklif

Listede olmayan ya da yüksek adetli parçalar için teklif isteyin.

Teklif isteyin

www.entegreci.com | **destek@entegreci.com** | **0850 305 90 34**

Entegreci is an online electronic components store based in Türkiye. Search by manufacturer part number to see stock, prices and datasheets for integrated circuits, microcontrollers, transistors, passive components and connectors, or request a quote for parts that are not listed.

Bu sayfa Entegreci tarafından eklenmiştir. Belgenin önceki sayfaları asıl yayıncısına aittir ve içeriği değiştirilmemiştir; en güncel sürüm için belgenin yayıncısına başvurun.