

ULTRALOW NOISE, HIGH PSRR, FAST RF, 100-mA LOW-DROPOUT LINEAR REGULATORS

FEATURES

- **100-mA Low-Dropout Regulator With $\overline{EN}$**
- **Available in 1.8-V, 3.3-V, 4.7-V, and Adjustable Versions**
- **High PSRR (70 dB at 10 kHz)**
- **Ultralow Noise (15 μV_{RMS})**
- **Fast Start-Up Time (63 μs)**
- **Stable With Any 1-μF Ceramic Capacitor**
- **Excellent Load/Line Transient**
- **Very Low Dropout Voltage (38 mV at Full Load, TPS79147)**
- **5-Pin SOT23 (DBV) Package**
- **TPS792xx Provides EN Options**

APPLICATIONS

- **VCOs**
- **RF**
- **Bluetooth™, Wireless LAN**

SUPPORTS DEFENSE, AEROSPACE, AND MEDICAL APPLICATIONS

- **Controlled Baseline**
- **One Assembly/Test Site**
- **One Fabrication Site**
- **Available in Military (–55°C/125°C) Temperature Range**(1)
- **Extended Product Life Cycle**
- **Extended Product-Change Notification**
- **Product Traceability**

(1) Custom temperature ranges available

DESCRIPTION

The TPS791xx family of low-dropout (LDO) low-power linear voltage regulators features high power supply rejection ratio (PSRR), ultralow noise, fast start-up, and excellent line and load transient responses in a small outline, SOT23, package. Each device in the family is stable, with a small 1-μF ceramic capacitor on the output. The family uses an advanced, proprietary BiCMOS fabrication process to yield extremely low dropout voltages (e.g., 38 mV at 100 mA, TPS79147). Each device achieves fast start-up times (approximately 63 μs with a 0.001-μF bypass capacitor) while consuming very low quiescent current (170 μA typical). Moreover, when the device is placed in standby mode, the supply current is reduced to less than 1 μA. The TPS79118 exhibits approximately 15 μV_{RMS} of output voltage noise with a 0.1-μF bypass capacitor. Applications with analog components that are noise sensitive, such as portable RF electronics, benefit from the high-PSRR and low-noise features as well as the fast response time.

ORDERING INFORMATION(1)

T_J	OUTPUT VOLTAGE	PACKAGE(2)		ORDERABLE PART NUMBER	TOP-SIDE MARKING
–40°C to 125°C	1.2 to 5.5 V	SOT23 (DBV)	Reel of 3000	TPS79101DBVREP	PEUE
	1.8 V			TPS79118DBVREP	PERE
	3.3 V			TPS79133DBVREP	PESE
	4.7 V			TPS79147DBVREP	PETE
–55°C to 125°C	3.3 V	SOT23 (DBV)	Reel of 250	TPS79133MDBVTEP	PIDM

(1) For the most current package and ordering information, see the Package Option Addendum at the end of this document, or see the TI web site at www.ti.com.
(2) Package drawings, thermal data, and symbolization are available at www.ti.com/packaging.

Please be aware that an important notice concerning availability, standard warranty, and use in critical applications of Texas Instruments semiconductor products and disclaimers thereto appears at the end of this data sheet.

Bluetooth is a trademark of Bluetooth SIG, Inc..

PRODUCTION DATA information is current as of publication date. Products conform to specifications per the terms of the Texas Instruments standard warranty. Production processing does not necessarily include testing of all parameters.

Copyright © 2003–2008, Texas Instruments Incorporated
On products compliant to MIL-PRF-38535, all parameters are tested unless otherwise noted. On all other products, production processing does not necessarily include testing of all parameters.

These devices have limited built-in ESD protection. The leads should be shorted together or the device placed in conductive foam during storage or handling to prevent electrostatic damage to the MOS gates.

DBV PACKAGE
(TOP VIEW)

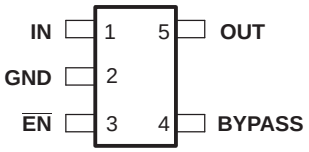

Fixed Option

DBV PACKAGE
(TOP VIEW)

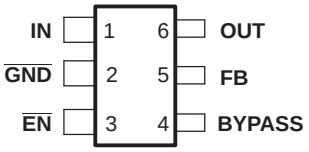

Adjustable Option

TPS79133
RIPPLE REJECTION
vs
FREQUENCY

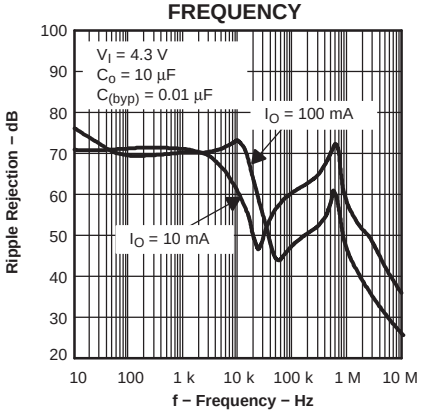

TPS79133
OUTPUT SPECTRAL NOISE DENSITY
vs
FREQUENCY

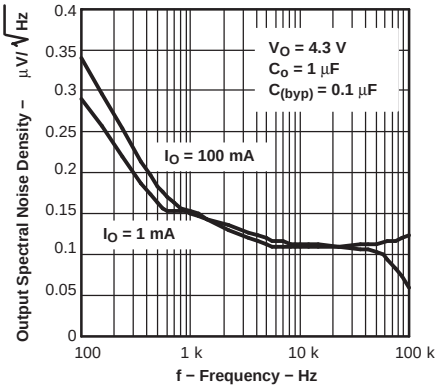

ABSOLUTE MAXIMUM RATINGS(1)

over operating free-air temperature range (unless otherwise noted)

		TPS79101, TPS79118, TPS79133, TPS79147
Input voltage range(2)		–0.3 V to 6 V
Voltage range at $\overline{EN}$		–0.3 V to V_I + 0.3 V
Voltage on OUT		–0.3 V to 6 V
Peak output current		Internally limited
ESD rating, HBM		2 kV
ESD rating, CDM		500 V
Continuous total power dissipation		See Dissipation Rating Table
Operating virtual-junction temperature range, T_J	All others	–40°C to 150°C
	TPS79133MDBVTEP	–55°C to 125°C
Operating ambient temperature range, T_A	All others	–40°C to 120°C
	TPS79133MBVTEP	–55°C to 125°C
Storage temperature range, T_{stg}		–65°C to 150°C
$R_{\theta JC}$(3)	Low K	63.75°C/W
	High K	63.75°C/W
$R_{\theta JA}$(4)	Low K	256°C/W
	High K	178.3°C/W

(1) Stresses beyond those listed under “absolute maximum ratings” may cause permanent damage to the device. These are stress ratings only, and functional operation of the device at these or any other conditions beyond those indicated under “recommended operating conditions” is not implied. Exposure to absolute-maximum-rated conditions for extended periods may affect device reliability.
(2) All voltage values are with respect to network ground terminal.
(3) The JEDEC low-K (1s) board design used to derive this data was a 3-inch × 3-inch, two-layer board with 2-ounce copper traces on top of the board.
(4) The JEDEC high-K (2s2p) board design used to derive this data was a 3-inch × 3-inch, multilayer board with 1-ounce internal power and ground planes and 2-ounce copper traces on top and bottom of the board.

Copyright © 2003–2008, Texas Instruments Incorporated

RECOMMENDED OPERATING CONDITIONS

		MIN	MAX	UNIT
Input voltage, V_I (1)		2.7	5.5	V
Continuous output current, I_O (2)		0	100	mA
Operating junction temperature, T_J		–40	125	°C
	TPS79133MBVTEP	–55	125	

(1) To calculate the minimum input voltage for your maximum output current, use the following formula: $V_I(min) = V_O(max) + VDO$ (max load)
(2) Continuous output current and operating junction temperature are limited by internal protection circuitry, but it is not recommended that the device operate under conditions beyond those specified in this table for extended periods of time.

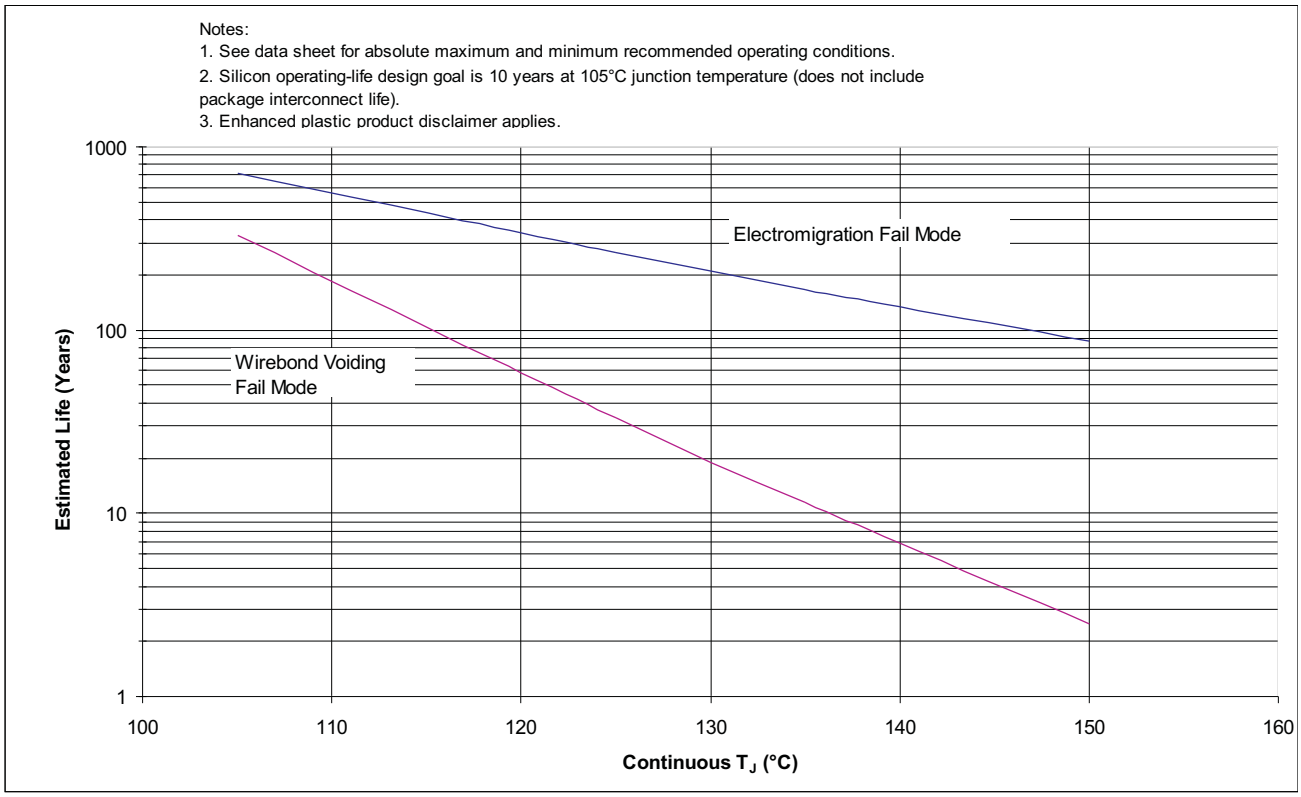

Figure 1. TPS79133 Operating Life Derating Chart

ELECTRICAL CHARACTERISTICS

over recommended operating free-air temperature range, (T_J = –40°C to 125°C), $V_I = V_O$(typ) + 1 V, I_O = 1 mA, $\overline{EN}$ = 0 V, C_o = 10 µF, C_o(byp) = 0.01 µF (unless otherwise noted)

PARAMETER		TEST CONDITIONS		MIN	TYP	MAX	UNIT
Output voltage	TPS79101	T_J = 25°C, 1.22 V ≤ V_O ≤ 5.2 V			V_O		V
		0 µA < I_O < 100 mA(1), 1.22 V ≤ V_O ≤ 5.2 V		0.98 V_O		1.02 V_O	
	TPS79118	T_J = 25°C			1.8		
		0 µA < I_O < 100 mA, 2.8 V < V_I < 5.5 V		1.764		1.836	
	TPS79133	T_J = 25°C			3.3		
		0 µA < I_O < 100 mA, 4.3 V < V_I < 5.5 V		3.234		3.366	
	TPS79147	T_J = 25°C			4.7		
		0 µA < I_O < 100 mA, 5.2 V < V_I < 5.5 V		4.606		4.794	
Quiescent current (GND current)		0 µA < I_O < 100 mA, T_J = 25°C			170		µA
		0 µA < I_O < 100 mA				250	
Load regulation		0 µA < I_O < 100 mA, T_J = 25°C			5		mV
Output voltage line regulation ($\Delta V_O/V_O$)(2)		V_O + 1 V < V_I ≤ 5.5 V, T_J = 25°C			0.05		%/V
		V_O + 1 V < V_I ≤ 5.5 V				0.12	
Output noise voltage (TPS79118)		BW = 100 Hz to 100 kHz, I_O = 100 mA, T_J = 25°C	$C_{(byp)}$ = 0.001 µF		32		μV_{RMS}
			$C_{(byp)}$ = 0.0047 µF		17		
			$C_{(byp)}$ = 0.01 µF		16		
			$C_{(byp)}$ = 0.1 µF		15		
Time, start-up (TPS79133)		R_L 33 Ω, CO = 1 µF, T_J = 25°C	$C_{(byp)}$ = 0.001 µF		53		µs
			$C_{(byp)}$ = 0.0047 µF		67		
			$C_{(byp)}$ = 0.01 µF		98		
Output current limit		V_O = 0 V(1)		285		600	mA
UVLO threshold		V_{CC} rising		2.25		2.65	V
UVLO hysteresis		T_J = 25°C, V_{CC} rising			100		mV

(1) The minimum IN operating voltage is 2.7 V or V_O(typ) + 1 V, whichever is greater. The maximum IN voltage is 5.5 V. The maximum output current is 100 mA.

(2) If V_O ≤ 1.8 V then V_{Imin} = 2.7 V, V_{Imax} = 5.5 V:

$$\text{Line regulation (mV)} = (\%/V) \times \frac{V_O\left(V_{Imax} - 2.7\ V\right)}{100} \times 1000$$

If V_O ≥ 2.5 V then $V_{Imin} = V_O$ + 1 V, V_{Imax} = 5.5 V:

$$\text{Line regulation (mV)} = (\%/V) \times \frac{V_O\left(V_{Imax} - \left(V_O + 1\ V\right)\right)}{100} \times 1000$$

Copyright © 2003–2008, Texas Instruments Incorporated

ELECTRICAL CHARACTERISTICS (continued)

over recommended operating free-air temperature range, (T_J = –40°C to 125°C), $V_I = V_O$(typ) + 1 V, I_O = 1 mA, $\overline{EN}$ = 0 V, C_o = 10 µF, C_o(byp) = 0.01 µF (unless otherwise noted)

PARAMETER		TEST CONDITIONS	MIN	TYP	MAX	UNIT
Standby current		$\overline{EN} = V_I$, 2.7 V < V_I < 5.5 V		0.07	1	µA
High-level enable input voltage		2.7 V < V_I < 5.5 V	2			V
Low-level enable input voltage		2.7 V < V_I < 5.5 V			0.7	V
Input current ($\overline{EN}$)		$\overline{EN} = V_I$	–1		1	µA
Power supply ripple rejection	TPS79118	f = 100 Hz, T_J = 25°C, I_O = 10 mA		80		dB
		f = 100 Hz, T_J = 25°C, I_O = 100 mA		75		
		f = 10 kHz, T_J = 25°C, I_O = 100 mA		72		
		f = 100 kHz, T_J = 25°C, I_O = 100 mA		45		
	TPS79133	f = 100 Hz, T_J = 25°C, I_O = 10 mA		70		
		f = 100 Hz, T_J = 25°C, I_O = 100 mA		75		
		f = 10 kHz, T_J = 25°C, I_O = 100 mA		73		
		f = 100 kHz, T_J = 25°C, I_O = 100 mA		37		
Dropout voltage(3)	TPS79133	I_O = 100 mA, T_J = 25°C		50		mV
		I_O = 100 mA			90	
	TPS79147	I_O = 100 mA, T_J = 25°C		38		
		I_O = 100 mA			70	

(3) IN voltage equals V_O(typ) – 100 mV. The TPS79118 dropout voltage is limited by the input voltage range limitations.

Copyright © 2003–2008, Texas Instruments Incorporated

FUNCTIONAL BLOCK DIAGRAM—ADJUSTABLE VERSION

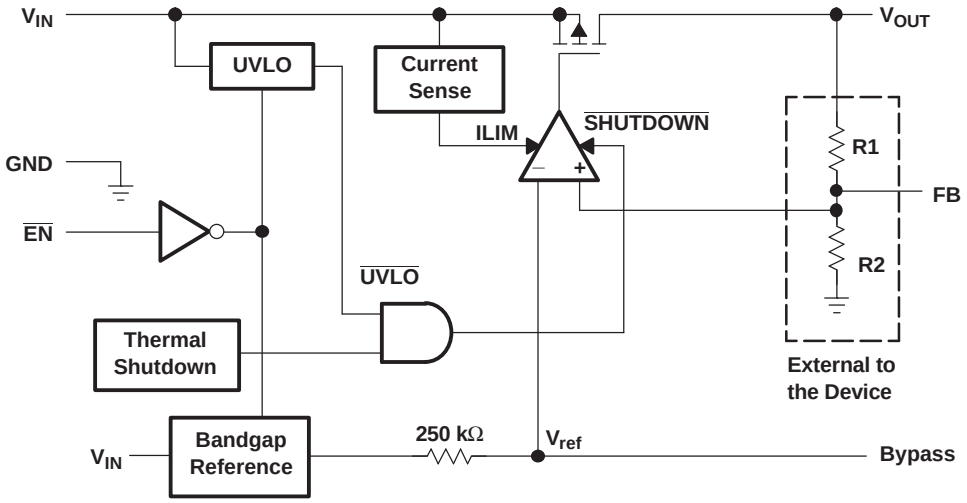

FUNCTIONAL BLOCK DIAGRAM—FIXED VERSION

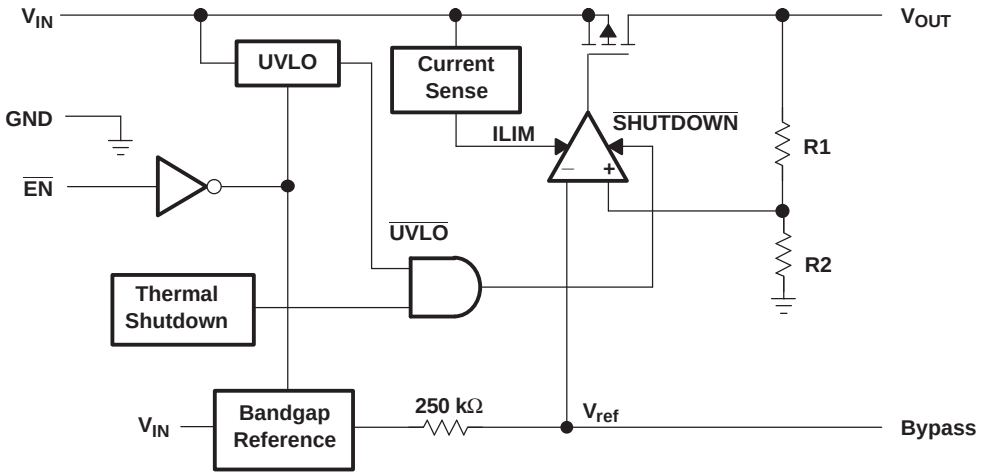

TERMINAL FUNCTIONS

TERMINAL			I/O	DESCRIPTION
NAME	ADJ	FIXED		
BYPASS	4	4		An external bypass capacitor, connected to this terminal, in conjunction with an internal resistor, creates a low-pass filter to further reduce regulator noise.
$\overline{EN}$	3	3	I	The $\overline{EN}$ terminal is an input which enables or shuts down the device. When $\overline{EN}$ is a logic high, the device will be in shutdown mode. When $\overline{EN}$ is a logic low, the device will be enabled.
FB	5	N/A	I	This terminal is the feedback input voltage for the adjustable device.
GND	2	2		Regulator ground
IN	1	1	I	The IN terminal is the input to the device.
OUT	6	5	O	The OUT terminal is the regulated output of the device.

Copyright © 2003–2008, Texas Instruments Incorporated

TYPICAL CHARACTERISTICS

TPS79118
OUTPUT VOLTAGE vs OUTPUT CURRENT

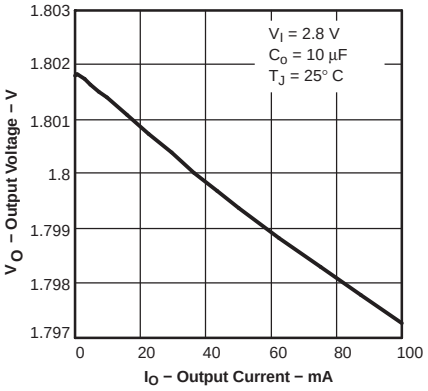

Figure 2.

TPS79133
OUTPUT VOLTAGE vs OUTPUT CURRENT

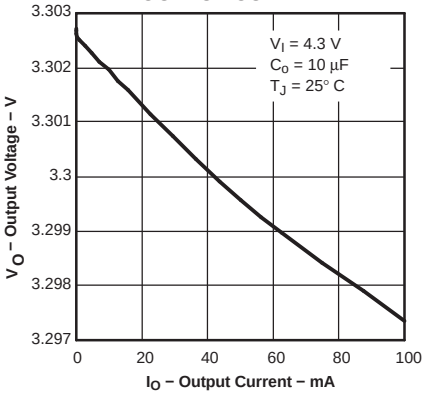

Figure 3.

TPS79118
OUTPUT VOLTAGE vs JUNCTION TEMPERATURE

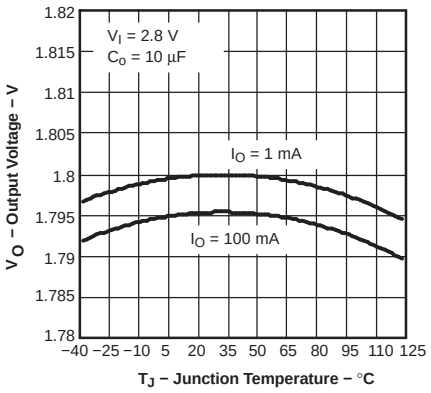

Figure 4.

TPS79133
OUTPUT VOLTAGE vs JUNCTION TEMPERATURE

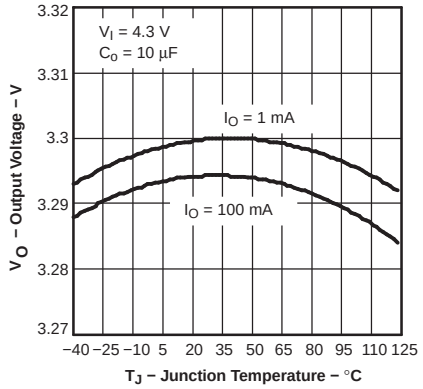

Figure 5.

TPS79133
GROUND CURRENT vs JUNCTION TEMPERATURE

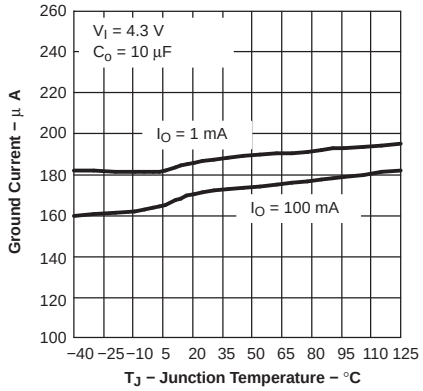

Figure 6.

TPS79118
OUTPUT SPECTRAL NOISE DENSITY vs FREQUENCY

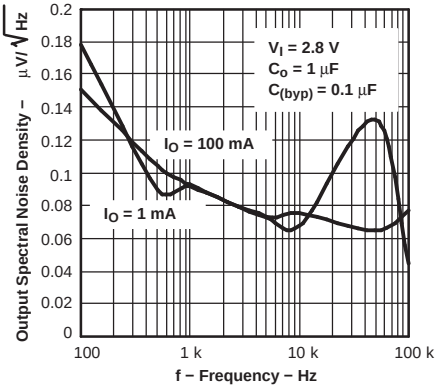

Figure 7.

TPS79118
OUTPUT SPECTRAL NOISE DENSITY vs FREQUENCY

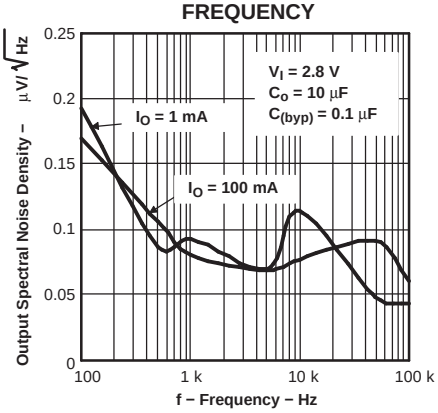

Figure 8.

TPS79118
OUTPUT SPECTRAL NOISE DENSITY vs FREQUENCY

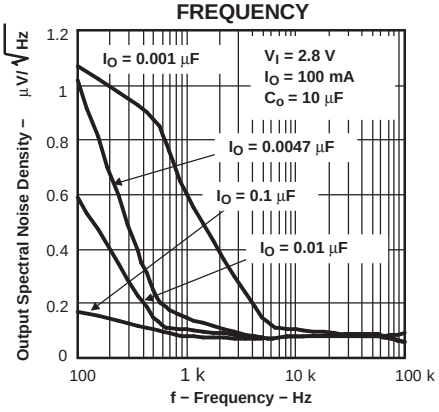

Figure 9.

TPS79133
OUTPUT SPECTRAL NOISE DENSITY vs FREQUENCY

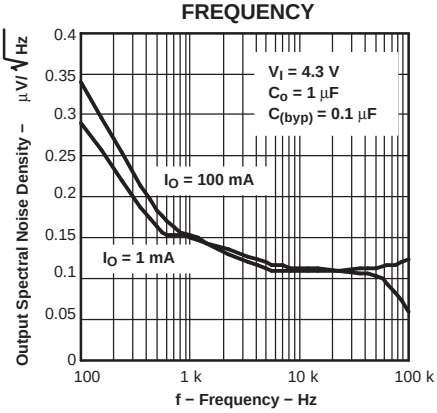

Figure 10.

Copyright © 2003–2008, Texas Instruments Incorporated

TYPICAL CHARACTERISTICS (continued)

TPS79133
OUTPUT SPECTRAL NOISE DENSITY
vs
FREQUENCY

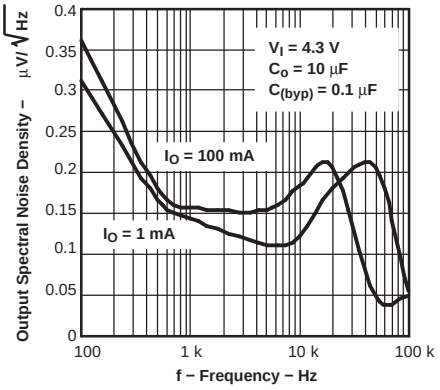

Figure 11.

TPS79133
OUTPUT SPECTRAL NOISE DENSITY
vs
FREQUENCY

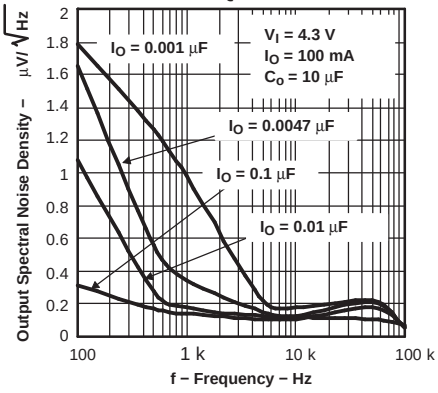

Figure 12.

ROOT MEAN SQUARED OUTPUT NOISE
vs
BYPASS CAPACITANCE

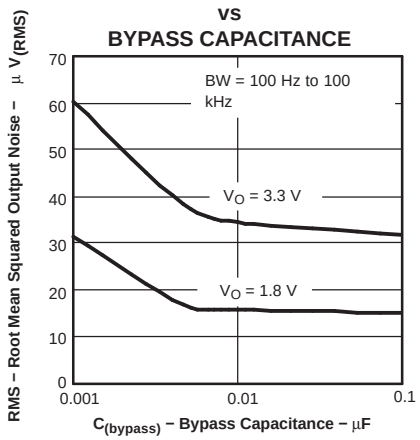

Figure 13.

TPS79133
OUTPUT IMPEDANCE
vs
FREQUENCY

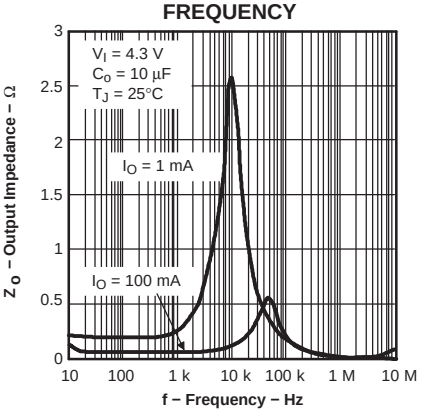

Figure 14.

TPS79133
DROPOUT VOLTAGE
vs
JUNCTION TEMPERATURE

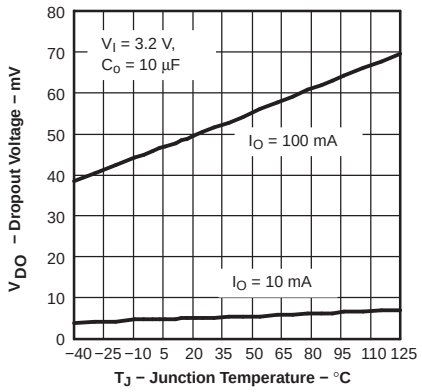

Figure 15.

TPS792133
DROPOUT VOLTAGE
vs
OUTPUT CURRENT

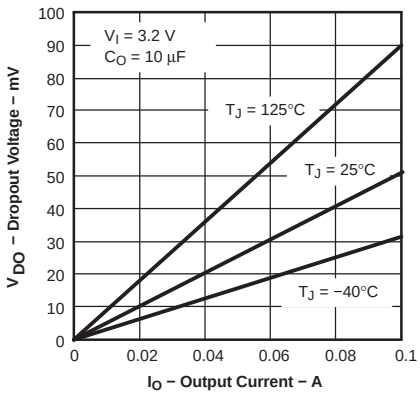

Figure 16.

TPS79101
DROPOUT VOLTAGE
vs
INPUT VOLTAGE

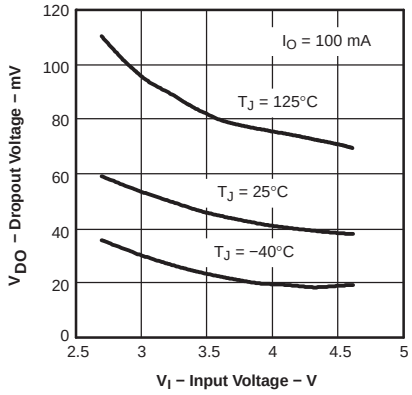

Figure 17.

MINIMUM REQUIRED INPUT VOLTAGE
vs
OUTPUT VOLTAGE

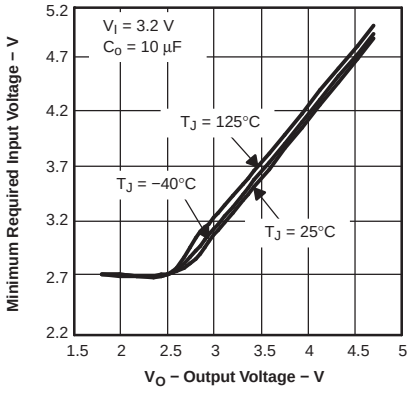

Figure 18.

TPS79118
RIPPLE REJECTION
vs
FREQUENCY

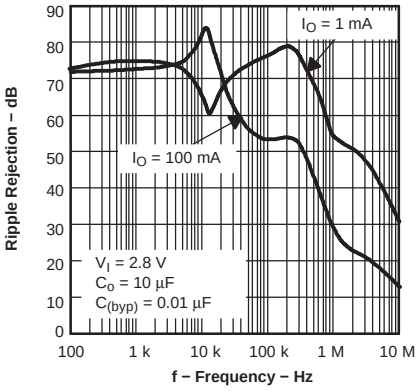

Figure 19.

Copyright © 2003–2008, Texas Instruments Incorporated

TYPICAL CHARACTERISTICS (continued)

TPS79118
RIPPLE REJECTION
vs
FREQUENCY

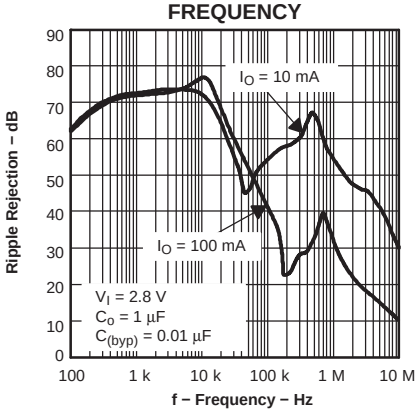

Figure 20.

TPS79118
RIPPLE REJECTION
vs
FREQUENCY

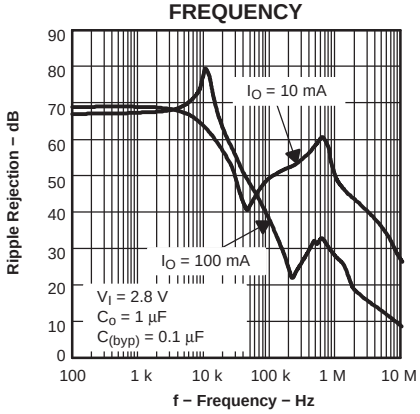

Figure 21.

TPS79133
RIPPLE REJECTION
vs
FREQUENCY

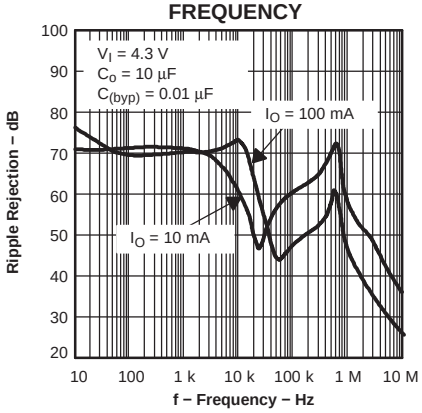

Figure 22.

TPS79133
RIPPLE REJECTION
vs
FREQUENCY

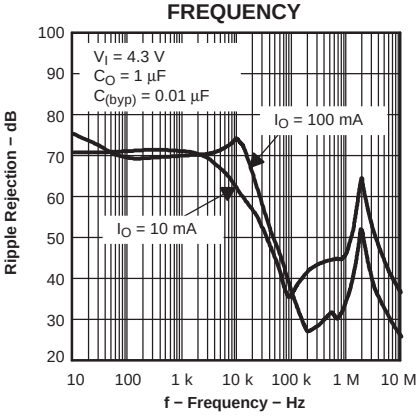

Figure 23.

TPS79133
RIPPLE REJECTION
vs
FREQUENCY

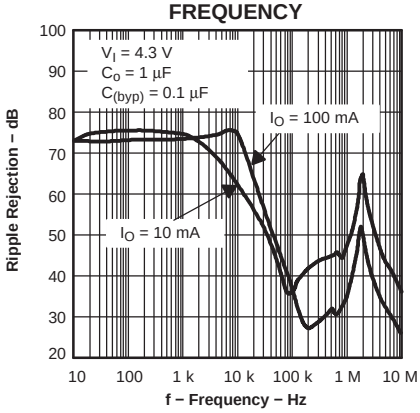

Figure 24.

TPS79133
OUTPUT VOLTAGE, ENABLE VOLTAGE
vs
TIME (START-UP)

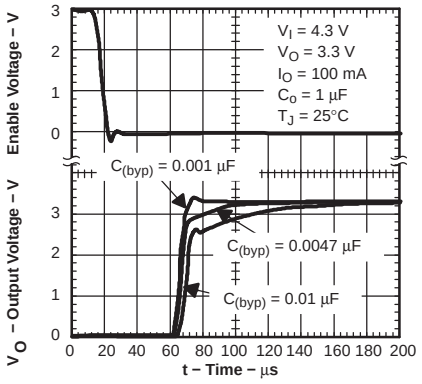

Figure 25.

TYPICAL CHARACTERISTICS (continued)

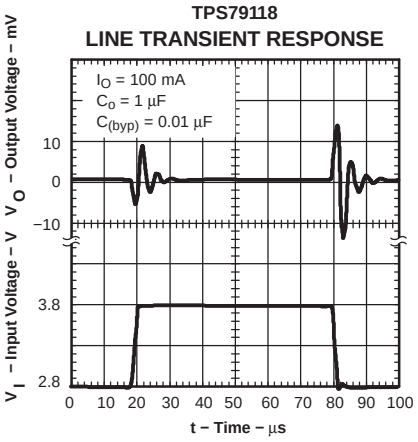

Figure 26.

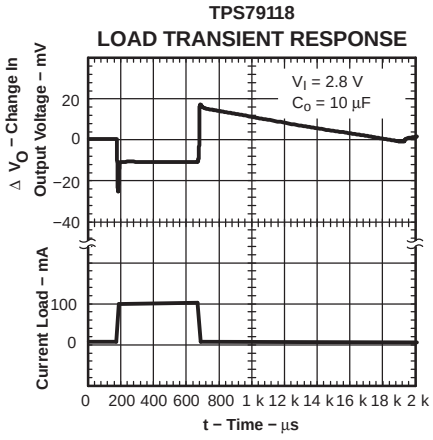

Figure 27.

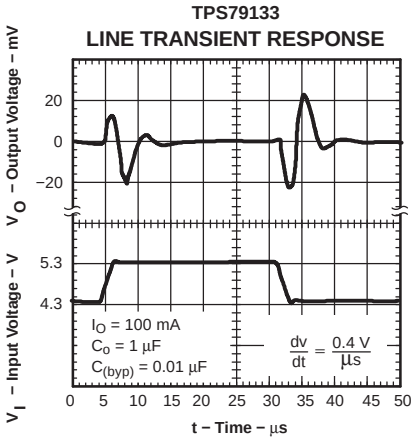

Figure 28.

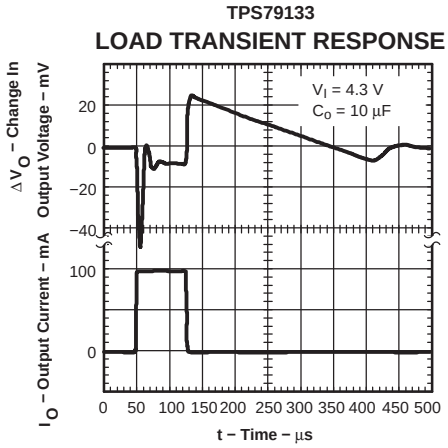

Figure 29.

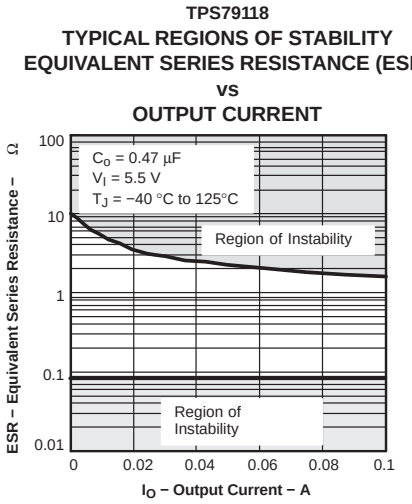

Figure 30.

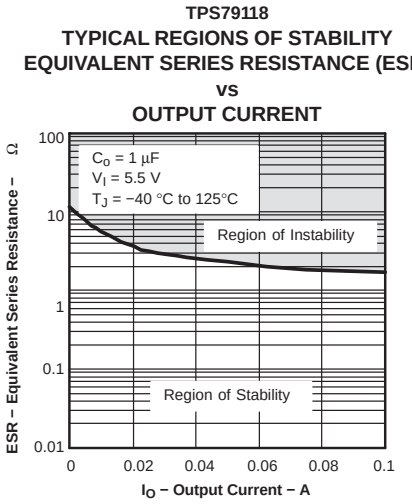

Figure 31.

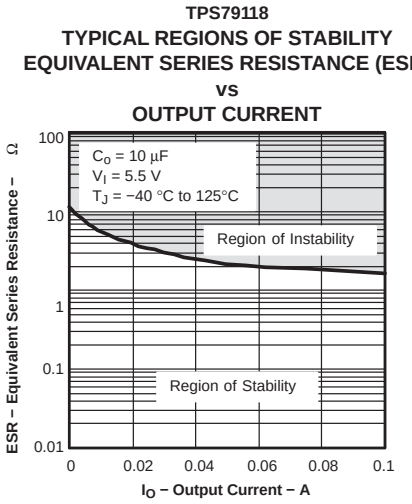

Figure 32.

Copyright © 2003–2008, Texas Instruments Incorporated

APPLICATION INFORMATION

The TPS791xx family of low-dropout (LDO) regulators have been optimized for use in noise-sensitive battery-operated equipment. The device features extremely low dropout voltages, high PSRR, ultralow output noise, low quiescent current (170 μA typically), and enable-input to reduce supply currents to less than 1 μA when the regulator is turned off.

A typical application circuit is shown in Figure 33.

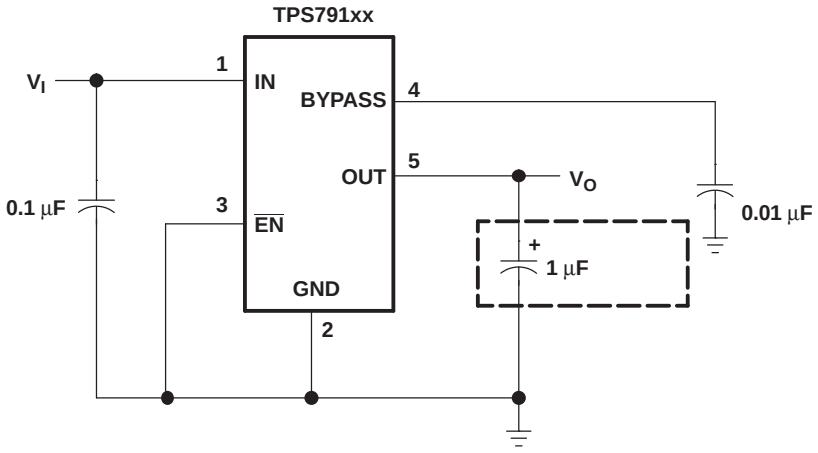

Figure 33. Typical Application Circuit

External Capacitor Requirements

A 0.1-μF or larger ceramic input bypass capacitor, connected between IN and GND and located close to the TPS791xx, is required for stability and to improve transient response, noise rejection, and ripple rejection. A higher-value electrolytic input capacitor may be necessary if large, fast-rise-time load transients are anticipated and the device is located several inches from the power source.

Like all low dropout regulators, the TPS791xx requires an output capacitor connected between OUT and GND to stabilize the internal control loop. The minimum recommended capacitance is 1 μF. Any 1-μF or larger ceramic capacitor is suitable. The device is also stable with a 0.47-μF ceramic capacitor with at least 75 mΩ of ESR.

The internal voltage reference is a key source of noise in an LDO regulator. The TPS791xx has a BYPASS pin which is connected to the voltage reference through a 250-kΩ internal resistor. The 250-kΩ internal resistor, in conjunction with an external bypass capacitor connected to the BYPASS pin, creates a low pass filter to reduce the voltage reference noise and, therefore, the noise at the regulator output. In order for the regulator to operate properly, the current flow out of the BYPASS pin must be at a minimum because any leakage current creates an IR drop across the internal resistor thus creating an output error. Therefore, the bypass capacitor must have minimal leakage current.

For example, the TPS79118 exhibits approximately 15 μV_{RMS} of output voltage noise using a 0.1-μF ceramic bypass capacitor and a 1-μF ceramic output capacitor. Note that the output starts up slower as the bypass capacitance increases due to the RC time constant at the bypass pin that is created by the internal 250 kΩ resistor and external capacitor.

Board Layout Recommendation To Improve PSRR And Noise Performance

To improve ac measurements like PSRR, output noise, and transient response, it is recommended that the board be designed with separate ground planes for V_{IN} and V_{OUT}, with each ground plane connected only at the ground pin of the device. In addition, the ground connection for the bypass capacitor should connect directly to the ground pin of the device.

Copyright © 2003–2008, Texas Instruments Incorporated

Power Dissipation and Junction Temperature

Specified regulator operation is assured to a junction temperature of 125°C; the maximum junction temperature should be restricted to 125°C under normal operating conditions. This restriction limits the power dissipation the regulator can handle in any given application. To ensure the junction temperature is within acceptable limits, calculate the maximum allowable dissipation, $P_{D(max)}$, and the actual dissipation, P_D, which must be less than or equal to $P_{D(max)}$.

The maximum power-dissipation limit is determined using the following equation:

$$P_{D(max)} = \frac{T_J max - T_A}{R_{\theta JA}} \quad (1)$$

Where:

$T_J$max is the maximum allowable junction temperature.

$R_{\theta JA}$ is the junction-to-ambient thermal resistance for the package (see the dissipation rating table).

T_A is the ambient temperature.

The regulator dissipation is calculated using:

$$P_D = \left(V_I - V_O\right) \times I_O \quad (2)$$

Power dissipation resulting from quiescent current is negligible. Excessive power dissipation triggers the thermal protection circuit.

Programming the TPS79101 Adjustable LDO Regulator

The output voltage of the TPS79101 adjustable regulator is programmed using an external resistor divider as shown in Figure 34. The output voltage is calculated using:

$$V_O = V_{ref} \times \left(1 + \frac{R1}{R2}\right) \quad (3)$$

Where:

V_{ref} = 1.2246 V typ (the internal reference voltage)

Resistors R1 and R2 should be chosen for approximately 50-µA divider current. Lower value resistors can be used for improved noise performance, but the solution consumes more power. Higher resistor values should be avoided as leakage current into/out of FB across R1/R2 creates an offset voltage that artificially increases/decreases the feedback voltage and thus erroneously decreases/increases V_O. The recommended design procedure is to choose R2 = 30.1 kΩ to set the divider current at 50 µA, C1 = 15 pF for stability, and then calculate R1 using:

$$R1 = \left(\frac{V_O}{V_{ref}} - 1\right) \times R2 \quad (4)$$

In order to improve the stability of the adjustable version, it is suggested that a small compensation capacitor be placed between OUT and FB. For voltages <1.8 V, the value of this capacitor should be 100 pF. For voltages > 1.8 V, the approximate value of this capacitor can be calculated as:

$$C1 = \frac{(3 \times 10^{-7}) \times (R1 + R2)}{(R1 \times R2)} \quad (5)$$

The suggested value of this capacitor for several resistor ratios is shown in the table below. If this capacitor is not used (such as in a unity-gain configuration) or if an output voltage < 1.8 V is chosen, then the minimum recommended output capacitor is 2.2 µF instead of 1 µF.

Copyright © 2003–2008, Texas Instruments Incorporated

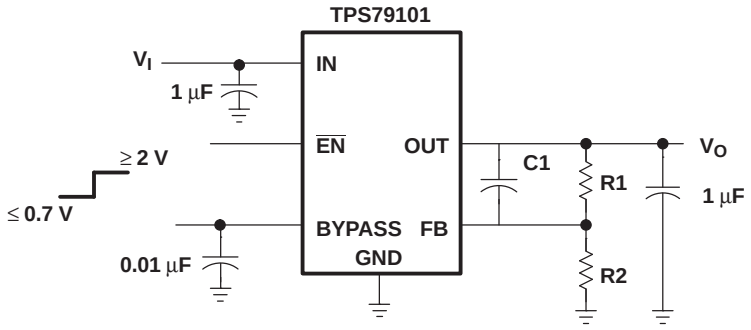

OUTPUT VOLTAGE PROGRAMMING GUIDE

OUTPUT VOLTAGE	R1	R2	C1
2.5 V	31.6 kΩ	30.1 kΩ	22 pF
3.3 V	51 kΩ	30.1 kΩ	15 pF
3.6 V	59 kΩ	30.1 kΩ	15 pF

Figure 34. TPS79101 Adjustable LDO Regulator Programming

Regulator Protection

The TPS791xx PMOS-pass transistor has a built-in back diode that conducts reverse current when the input voltage drops below the output voltage (e.g., during power down). Current is conducted from the output to the input and is not internally limited. If extended reverse voltage operation is anticipated, external limiting might be appropriate.

The TPS791xx features internal current limiting and thermal protection. During normal operation, the TPS791xx limits output current to approximately 400 mA. When current limiting engages, the output voltage scales back linearly until the overcurrent condition ends. While current limiting is designed to prevent gross device failure, care should be taken not to exceed the power dissipation ratings of the package or the absolute maximum voltage ratings of the device. If the temperature of the device exceeds approximately 165°C, thermal-protection circuitry shuts it down. Once the device has cooled down to below approximately 140°C, regulator operation resumes.

Copyright © 2003–2008, Texas Instruments Incorporated

PACKAGING INFORMATION

Orderable part number	Status (1)	Material type (2)	Package | Pins	Package qty | Carrier	RoHS (3)	Lead finish/ Ball material (4)	MSL rating/ Peak reflow (5)	Op temp (°C)	Part marking (6)
TPS79101DBVREP	Active	Production	SOT-23 (DBV) | 6	3000 | LARGE T&R	Yes	NIPDAU	Level-1-260C-UNLIM	-40 to 125	PEUE
TPS79101DBVREP.A	Active	Production	SOT-23 (DBV) | 6	3000 | LARGE T&R	Yes	NIPDAU	Level-1-260C-UNLIM	-40 to 125	PEUE
TPS79133DBVREP	Active	Production	SOT-23 (DBV) | 5	3000 | LARGE T&R	Yes	NIPDAU	Level-1-260C-UNLIM	-40 to 125	PESE
TPS79133DBVREP.A	Active	Production	SOT-23 (DBV) | 5	3000 | LARGE T&R	Yes	NIPDAU	Level-1-260C-UNLIM	-40 to 125	PESE
TPS79133MDBVTEP	Active	Production	SOT-23 (DBV) | 5	250 | SMALL T&R	Yes	NIPDAU	Level-1-260C-UNLIM	-55 to 125	PIDM
TPS79133MDBVTEP.A	Active	Production	SOT-23 (DBV) | 5	250 | SMALL T&R	Yes	NIPDAU	Level-1-260C-UNLIM	-55 to 125	PIDM
TPS79147DBVREP	Active	Production	SOT-23 (DBV) | 5	3000 | LARGE T&R	Yes	NIPDAU	Level-1-260C-UNLIM	-40 to 125	PETE
TPS79147DBVREP.A	Active	Production	SOT-23 (DBV) | 5	3000 | LARGE T&R	Yes	NIPDAU	Level-1-260C-UNLIM	-40 to 125	PETE
V62/03644-01YE	Active	Production	SOT-23 (DBV) | 6	3000 | LARGE T&R	Yes	NIPDAU	Level-1-260C-UNLIM	-40 to 125	PEUE
V62/03644-03XE	Active	Production	SOT-23 (DBV) | 5	3000 | LARGE T&R	Yes	NIPDAU	Level-1-260C-UNLIM	-40 to 125	PESE
V62/03644-04XE	Active	Production	SOT-23 (DBV) | 5	3000 | LARGE T&R	Yes	NIPDAU	Level-1-260C-UNLIM	-40 to 125	PETE
V62/03644-05XE	Active	Production	SOT-23 (DBV) | 5	250 | SMALL T&R	Yes	NIPDAU	Level-1-260C-UNLIM	-55 to 125	PIDM

(1) **Status:** For more details on status, see our product life cycle.

(2) **Material type:** When designated, preproduction parts are prototypes/experimental devices, and are not yet approved or released for full production. Testing and final process, including without limitation quality assurance, reliability performance testing, and/or process qualification, may not yet be complete, and this item is subject to further changes or possible discontinuation. If available for ordering, purchases will be subject to an additional waiver at checkout, and are intended for early internal evaluation purposes only. These items are sold without warranties of any kind.

(3) **RoHS values:** Yes, No, RoHS Exempt. See the TI RoHS Statement for additional information and value definition.

(4) **Lead finish/Ball material:** Parts may have multiple material finish options. Finish options are separated by a vertical ruled line. Lead finish/Ball material values may wrap to two lines if the finish value exceeds the maximum column width.

(5) **MSL rating/Peak reflow:** The moisture sensitivity level ratings and peak solder (reflow) temperatures. In the event that a part has multiple moisture sensitivity ratings, only the lowest level per JEDEC standards is shown. Refer to the shipping label for the actual reflow temperature that will be used to mount the part to the printed circuit board.

(6) **Part marking:** There may be an additional marking, which relates to the logo, the lot trace code information, or the environmental category of the part.

Multiple part markings will be inside parentheses. Only one part marking contained in parentheses and separated by a "~" will appear on a part. If a line is indented then it is a continuation of the previous line and the two combined represent the entire part marking for that device.

Important Information and Disclaimer: The information provided on this page represents TI's knowledge and belief as of the date that it is provided. TI bases its knowledge and belief on information provided by third parties, and makes no representation or warranty as to the accuracy of such information. Efforts are underway to better integrate information from third parties. TI has taken and continues to take reasonable steps to provide representative and accurate information but may not have conducted destructive testing or chemical analysis on incoming materials and chemicals. TI and TI suppliers consider certain information to be proprietary, and thus CAS numbers and other limited information may not be available for release.

In no event shall TI's liability arising out of such information exceed the total purchase price of the TI part(s) at issue in this document sold by TI to Customer on an annual basis.

TAPE AND REEL INFORMATION

REEL DIMENSIONS

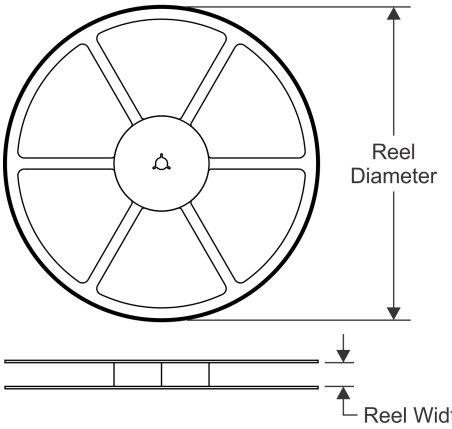

TAPE DIMENSIONS

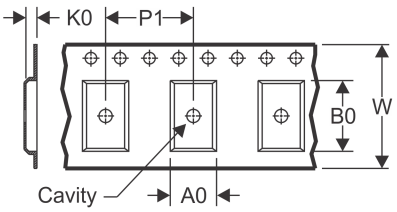

A0	Dimension designed to accommodate the component width
B0	Dimension designed to accommodate the component length
K0	Dimension designed to accommodate the component thickness
W	Overall width of the carrier tape
P1	Pitch between successive cavity centers

QUADRANT ASSIGNMENTS FOR PIN 1 ORIENTATION IN TAPE

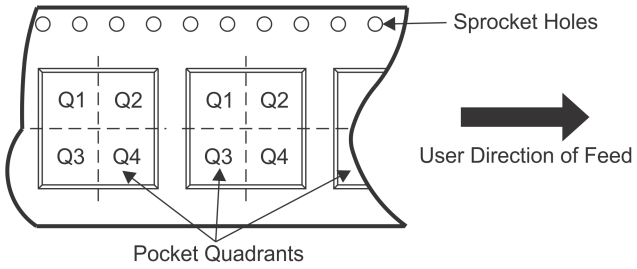

*All dimensions are nominal

Device	Package Type	Package Drawing	Pins	SPQ	Reel Diameter (mm)	Reel Width W1 (mm)	A0 (mm)	B0 (mm)	K0 (mm)	P1 (mm)	W (mm)	Pin1 Quadrant
TPS79101DBVREP	SOT-23	DBV	6	3000	180.0	9.0	3.15	3.2	1.4	4.0	8.0	Q3
TPS79133DBVREP	SOT-23	DBV	5	3000	180.0	9.0	3.15	3.2	1.4	4.0	8.0	Q3
TPS79133MDBVTEP	SOT-23	DBV	5	250	180.0	9.0	3.15	3.2	1.4	4.0	8.0	Q3
TPS79147DBVREP	SOT-23	DBV	5	3000	180.0	9.0	3.15	3.2	1.4	4.0	8.0	Q3

TAPE AND REEL BOX DIMENSIONS

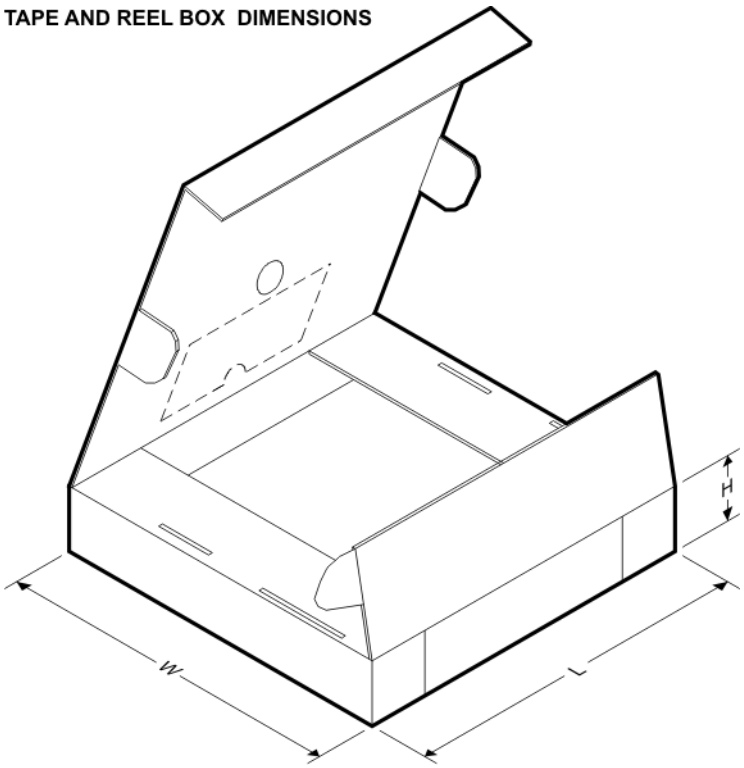

*All dimensions are nominal

Device	Package Type	Package Drawing	Pins	SPQ	Length (mm)	Width (mm)	Height (mm)
TPS79101DBVREP	SOT-23	DBV	6	3000	182.0	182.0	20.0
TPS79133DBVREP	SOT-23	DBV	5	3000	182.0	182.0	20.0
TPS79133MDBVTEP	SOT-23	DBV	5	250	182.0	182.0	20.0
TPS79147DBVREP	SOT-23	DBV	5	3000	182.0	182.0	20.0

PACKAGE OUTLINE

DBV0005A

SOT-23 - 1.45 mm max height

SMALL OUTLINE TRANSISTOR

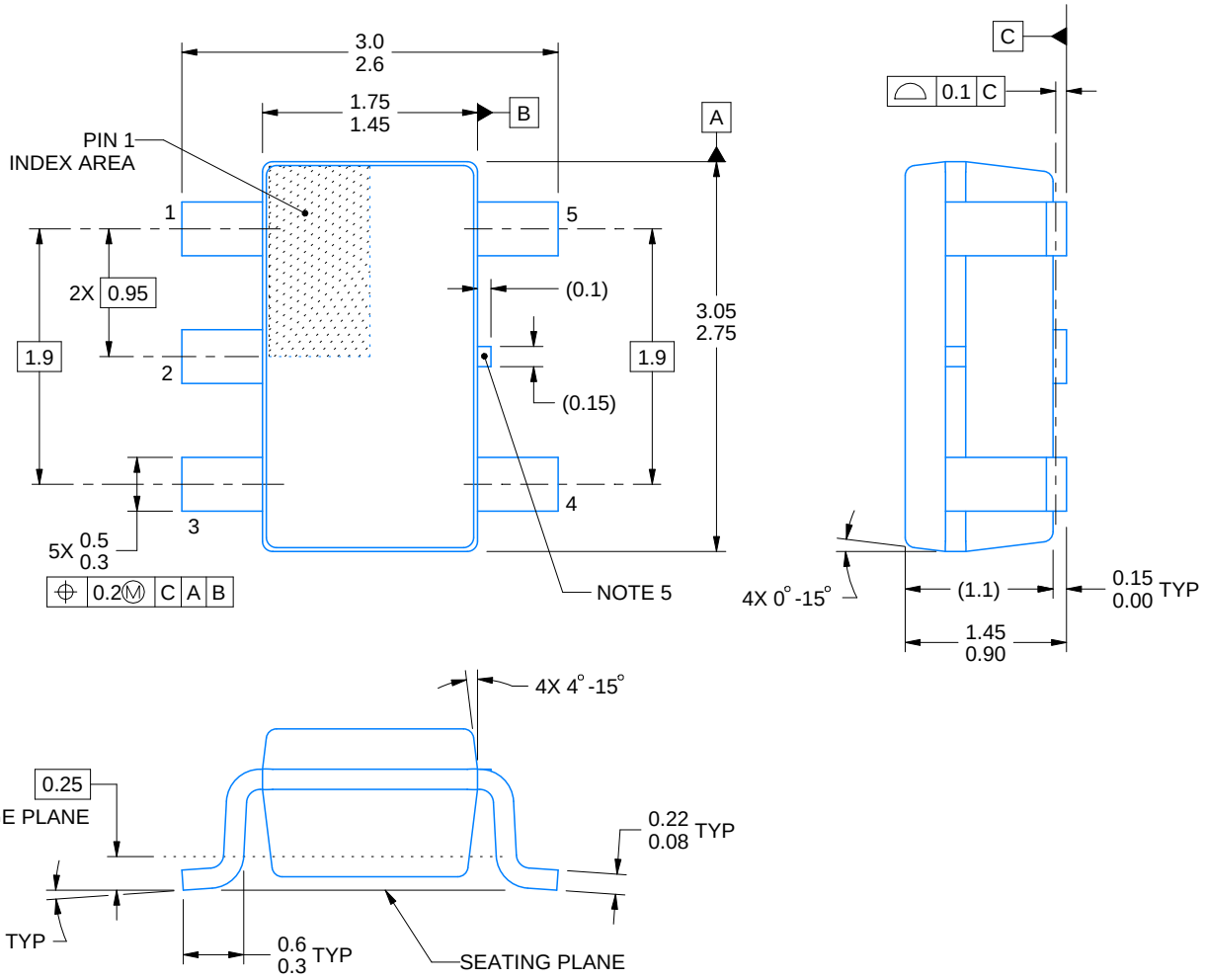

4214839/K 08/2024

NOTES:

1. All linear dimensions are in millimeters. Any dimensions in parenthesis are for reference only. Dimensioning and tolerancing per ASME Y14.5M.
2. This drawing is subject to change without notice.
3. Refernce JEDEC MO-178.
4. Body dimensions do not include mold flash, protrusions, or gate burrs. Mold flash, protrusions, or gate burrs shall not exceed 0.25 mm per side.
5. Support pin may differ or may not be present.

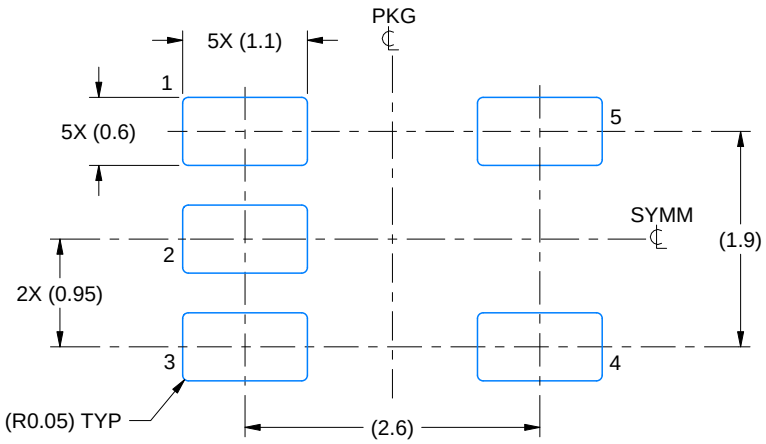

LAND PATTERN EXAMPLE
EXPOSED METAL SHOWN
SCALE:15X

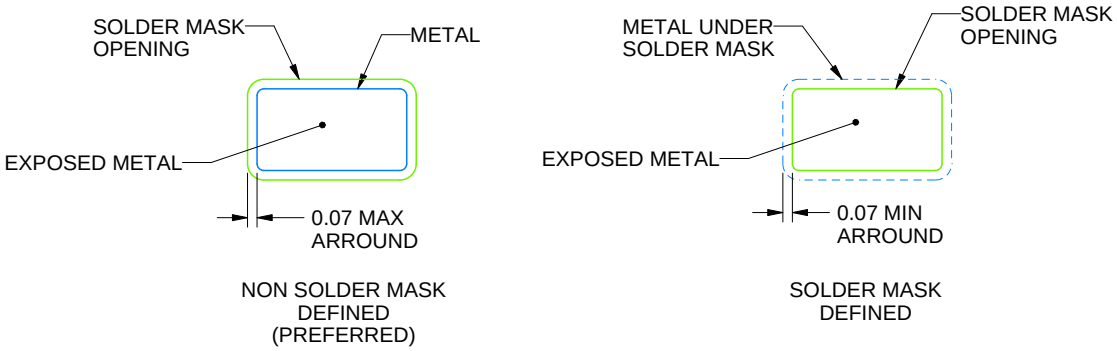

SOLDER MASK DETAILS

4214839/K 08/2024

NOTES: (continued)

6. Publication IPC-7351 may have alternate designs.
7. Solder mask tolerances between and around signal pads can vary based on board fabrication site.

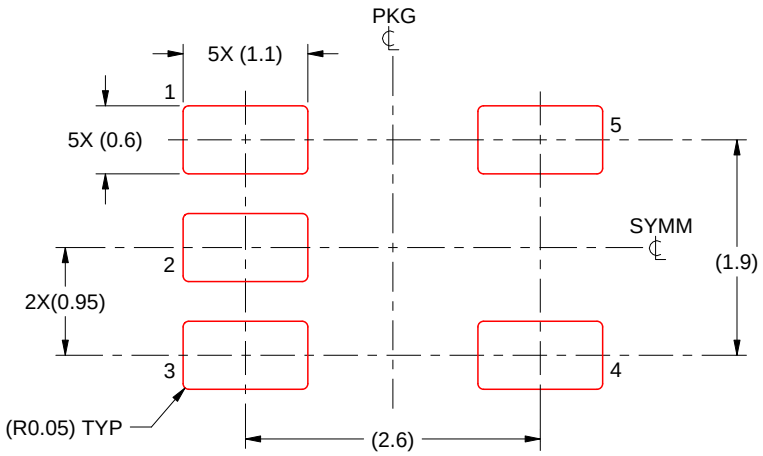

SOLDER PASTE EXAMPLE
BASED ON 0.125 mm THICK STENCIL
SCALE:15X

4214839/K 08/2024

NOTES: (continued)

8. Laser cutting apertures with trapezoidal walls and rounded corners may offer better paste release. IPC-7525 may have alternate design recommendations.
9. Board assembly site may have different recommendations for stencil design.

PACKAGE OUTLINE

DBV0006A

SOT-23 - 1.45 mm max height

SMALL OUTLINE TRANSISTOR

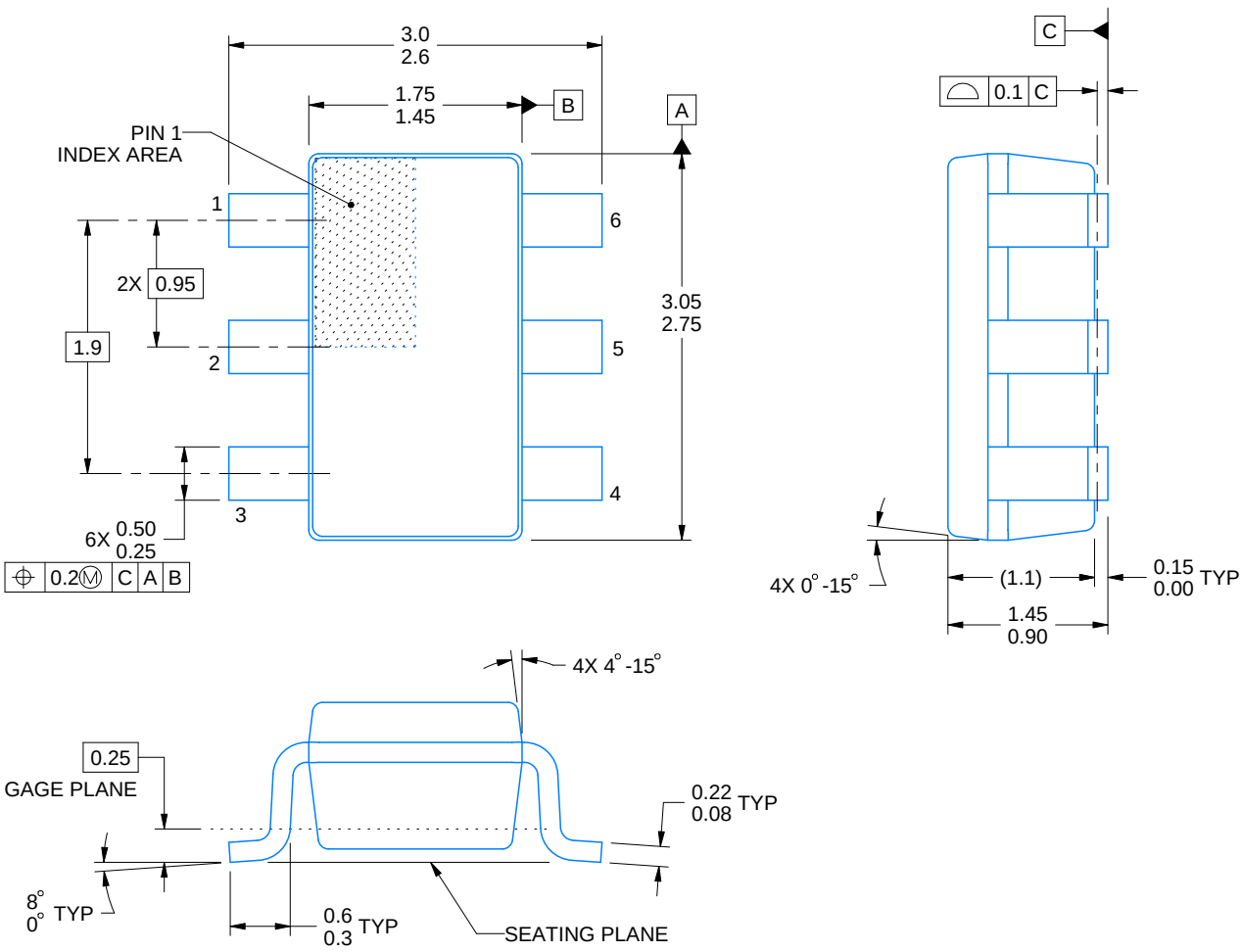

4214840/G 08/2024

NOTES:

1. All linear dimensions are in millimeters. Any dimensions in parenthesis are for reference only. Dimensioning and tolerancing per ASME Y14.5M.
2. This drawing is subject to change without notice.
3. Body dimensions do not include mold flash or protrusion. Mold flash and protrusion shall not exceed 0.25 per side.
4. Leads 1,2,3 may be wider than leads 4,5,6 for package orientation.
5. Refernce JEDEC MO-178.

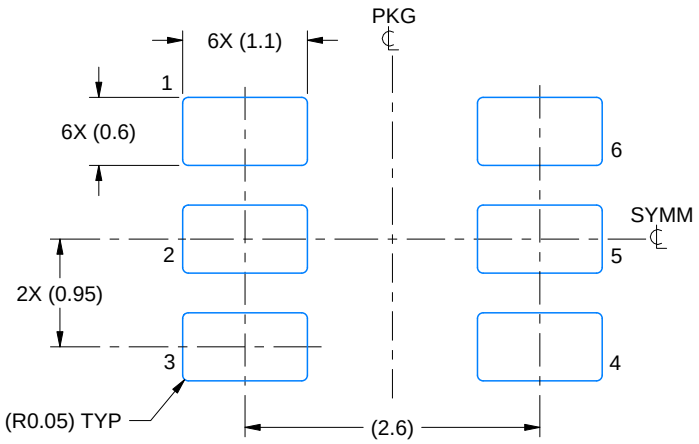

LAND PATTERN EXAMPLE
EXPOSED METAL SHOWN
SCALE:15X

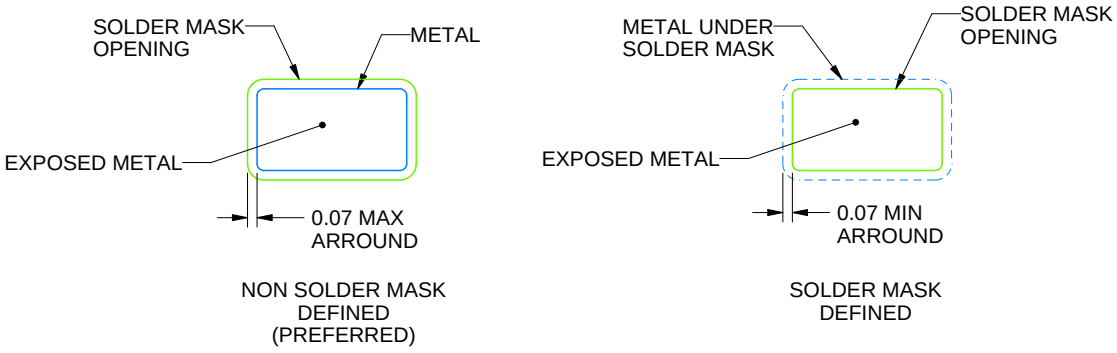

SOLDER MASK DETAILS

4214840/G 08/2024

NOTES: (continued)

6. Publication IPC-7351 may have alternate designs.
7. Solder mask tolerances between and around signal pads can vary based on board fabrication site.

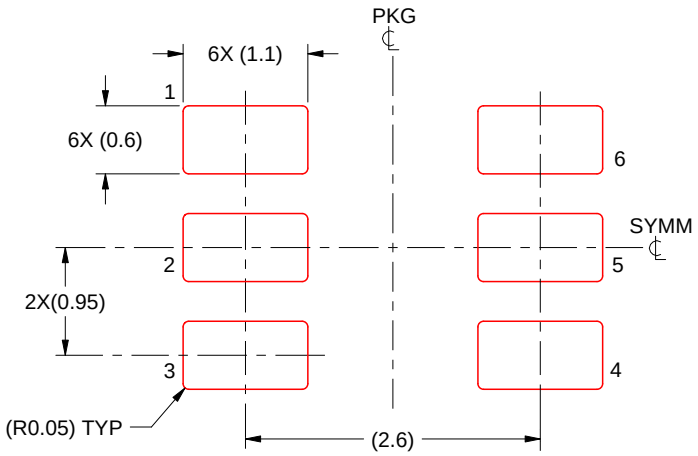

SOLDER PASTE EXAMPLE
BASED ON 0.125 mm THICK STENCIL
SCALE:15X

4214840/G 08/2024

NOTES: (continued)

8. Laser cutting apertures with trapezoidal walls and rounded corners may offer better paste release. IPC-7525 may have alternate design recommendations.
9. Board assembly site may have different recommendations for stencil design.

IMPORTANT NOTICE AND DISCLAIMER

TI PROVIDES TECHNICAL AND RELIABILITY DATA (INCLUDING DATASHEETS), DESIGN RESOURCES (INCLUDING REFERENCE DESIGNS), APPLICATION OR OTHER DESIGN ADVICE, WEB TOOLS, SAFETY INFORMATION, AND OTHER RESOURCES “AS IS” AND WITH ALL FAULTS, AND DISCLAIMS ALL WARRANTIES, EXPRESS AND IMPLIED, INCLUDING WITHOUT LIMITATION ANY IMPLIED WARRANTIES OF MERCHANTABILITY, FITNESS FOR A PARTICULAR PURPOSE OR NON-INFRINGEMENT OF THIRD PARTY INTELLECTUAL PROPERTY RIGHTS.

These resources are intended for skilled developers designing with TI products. You are solely responsible for (1) selecting the appropriate TI products for your application, (2) designing, validating and testing your application, and (3) ensuring your application meets applicable standards, and any other safety, security, regulatory or other requirements.

These resources are subject to change without notice. TI grants you permission to use these resources only for development of an application that uses the TI products described in the resource. Other reproduction and display of these resources is prohibited. No license is granted to any other TI intellectual property right or to any third party intellectual property right. TI disclaims responsibility for, and you fully indemnify TI and its representatives against any claims, damages, costs, losses, and liabilities arising out of your use of these resources.

TI’s products are provided subject to TI’s Terms of Sale, TI’s General Quality Guidelines, or other applicable terms available either on ti.com or provided in conjunction with such TI products. TI’s provision of these resources does not expand or otherwise alter TI’s applicable warranties or warranty disclaimers for TI products. Unless TI explicitly designates a product as custom or customer-specified, TI products are standard, catalog, general purpose devices.

TI objects to and rejects any additional or different terms you may propose.

Copyright © 2025, Texas Instruments Incorporated

Last updated 10/2025

ENTEGRECİ

Bu belge www.entegreci.com üzerinden sunulmaktadır.

Elektronik komponent tedarikinde Entegreci

Entegreci, Eskişehir merkezli, Türkiye geneline satış yapan bir elektronik komponent mağazasıdır. Entegreler (IC), mikrodenetleyiciler, transistörler, diyotlar, pasif elemanlar, konnektörler, modüller ve geliştirme kartları tek adetten seri üretim adetlerine kadar satılır. Ürün sayfalarında güncel stok durumunu, fiyatı ve datasheet bağlantısını bulabilirsiniz.

Parça koduyla arama

Üretici parça numarasını yazın; stok ve fiyatı hemen görün.

www.entegreci.com

Ürün kategorileri

Entegreden kapasitöre tüm elektronik komponent kategorileri.

Kategorilere göz atın

Üreticiler

Aradığınız üreticinin ürünlerini tek sayfada inceleyin.

Üreticileri görün

Toplu alım ve teklif

Listede olmayan ya da yüksek adetli parçalar için teklif isteyin.

Teklif isteyin

www.entegreci.com | **destek@entegreci.com** | **0850 305 90 34**

Entegreci is an online electronic components store based in Türkiye. Search by manufacturer part number to see stock, prices and datasheets for integrated circuits, microcontrollers, transistors, passive components and connectors, or request a quote for parts that are not listed.

Bu sayfa Entegreci tarafından eklenmiştir. Belgenin önceki sayfaları asıl yayıncısına aittir ve içeriği değiştirilmemiştir; en güncel sürüm için belgenin yayıncısına başvurun.