# TPS7B85-Q1 Automotive, 150mA, 40V, Low-Dropout Regulator With Power-Good and Integrated Voltage Monitoring

## 1 Features

- AEC-Q100 qualified for automotive applications:
  - Temperature grade 1: –40°C to +125°C, $T_A$
  - Junction temperature: –40°C to +150°C, $T_J$
- Input voltage range: 3V to 40V (42V max)
- Output voltage range: 3.3V and 5V (fixed)
- Output current: up to 150mA
- Output voltage accuracy: ±0.75% (max)
- Low dropout voltage:
  - 225mV (max) at 150mA ($V_{OUT}$ ≥ 3.3V)
- Low quiescent current:
  - 18µA (typ)
  - 4µA (max) when disabled
- Excellent line transient response:
  - ±2% $V_{OUT}$ deviation during cold-crank
  - ±2% $V_{OUT}$ deviation (1V/µs $V_{IN}$ slew rate)
- Integrated voltage detection
- Power-good with adjustable threshold and programmable delay period
- Stable with a 2.2µF or larger capacitor
- Functional Safety-Capable
  - Documentation available to aid functional safety system design
- Package: 10-pin VSON with thermal pad
  - Low thermal resistance ($R_{\theta JA}$): 50.3°C/W

## 2 Applications

- Reconfigurable instrument clusters
- Body control modules (BCM)
- Always-on battery-connected applications:
  - Automotive gateways
  - Remote keyless entries (RKE)

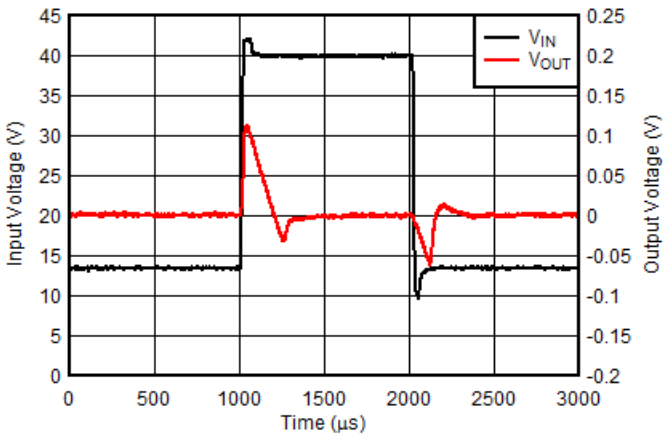


**Line Transient Response (3V/µs $V_{IN}$ Slew Rate)**

## 3 Description

The TPS7B85-Q1 is a low-dropout linear regulator designed to connect to the battery in automotive applications. The device has an input voltage range extending to 40V, which allows the device to withstand transients (such as load dump) that are anticipated in automotive systems. With only an 18µA quiescent current, the device is an optimal solution for powering always-on components such as microcontrollers (MCUs) and controller area network (CAN) transceivers in standby systems.

The device has state-of-the-art transient response that allows the output to quickly react to changes in load or line (for example, during cold-crank conditions). Additionally, the device has a novel architecture that minimizes output overshoot when recovering from dropout. During normal operation, the device has a tight DC accuracy of ±0.75% over line, load, and temperature.

The TPS7B85-Q1 is equipped with power-good and integrated voltage monitoring. The power-good delay and voltage threshold can be adjusted by external components. The integrated voltage detector can be used to monitor the input voltage and alert downstream components (such as MCUs) when the battery voltage begins to fall.

The device is available in a small VSON package that facilitates a compact printed circuit board (PCB) design. The low thermal resistance enables sustained operation despite significant dissipation across the device.

**Device Information**

| PART NUMBER | PACKAGE(1) | BODY SIZE (NOM) |
|---|---|---|
| TPS7B85-Q1 | VSON (10) | 3.00mm × 3.00mm |

(1) For all available packages, see the orderable addendum at the end of the data sheet.

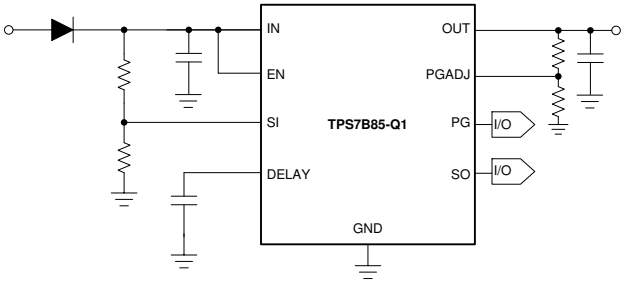


**Typical Application Schematic**

An IMPORTANT NOTICE at the end of this data sheet addresses availability, warranty, changes, use in safety-critical applications, intellectual property matters and other important disclaimers. PRODUCTION DATA.

# Table of Contents

**1 Features**....1
**2 Applications**....1
**3 Description**....1
**4 Pin Configuration and Functions**....3
**5 Specifications**....4
5.1 Absolute Maximum Ratings....4
5.2 ESD Ratings....4
5.3 Recommended Operating Conditions....4
5.4 Thermal Information....5
5.5 Electrical Characteristics....5
5.6 Switching Characteristics....6
5.7 Typical Characteristics....7
**6 Detailed Description**....14
6.1 Overview....14
6.2 Functional Block Diagram....14
6.3 Feature Description....15
6.4 Device Functional Modes....18
**7 Application and Implementation**....19
7.1 Application Information....19
7.2 Typical Application....27
7.3 Power Supply Recommendations....28
7.4 Layout....28
**8 Device and Documentation Support**....30
8.1 Device Support....30
8.2 Receiving Notification of Documentation Updates....30
8.3 Support Resources....30
8.4 Trademarks....30
8.5 Electrostatic Discharge Caution....30
8.6 Glossary....30
**9 Revision History**....31
**10 Mechanical, Packaging, and Orderable Information**....31


Copyright © 2026 Texas Instruments Incorporated

# 4 Pin Configuration and Functions

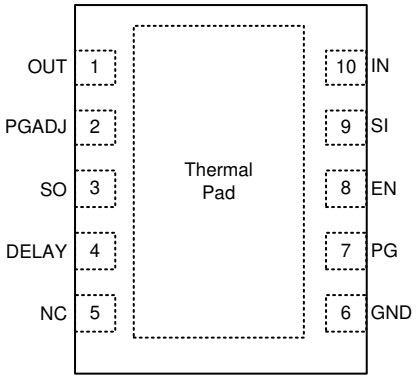


**Figure 4-1. DRC Package,10-Pin VSON,Top View**

**Table 4-1. Pin Functions**

| PIN | | TYPE[1] | DESCRIPTION |
|---|---|---|---|
| NAME | DRC | | |
| DELAY | 4 | O | Power-good delay adjustment pin. Connect a capacitor from this pin to GND to set the PG reset delay. Leave this pin floating for a default ($t_{(DLY_FIX)}$) delay. See the *Power-Good* section for more information. If this functionality is not desired, leave this pin floating because connecting this pin to GND causes a perminant increase in the GND current. |
| EN | 8 | I | Enable pin. The device is disabled when the enable pin becomes lower than the enable logic input low level ($V_{IL}$). To ensure the device is enabled, the EN pin must be driven above the logic high level ($V_{IH}$). This pin should not be left floating as this pin is high impedance if it is left floating the part may enable or disable. |
| GND | 6 | G | Ground pin. Connect this pin to the thermal pad with a low-impedance connection. |
| NC | 5 | — | No internal connection. Connect this pin to GND for the best thermal resistance. |
| PGADJ | 2 | I | Power-good threshold-adjustment pin. Connect a resistor divider between the PGADJ and OUT pins to set the power-good threshold. Connect this pin to ground to set the threshold to $V_{PG(TH,FALLING)}$. See *Power-Good* for more information. |
| PG | 7 | O | Power-good pin. This pin has an internal pullup resistor. Do not connect this pin to $V_{OUT}$ or any other biased voltage rail. $V_{PG}$ is logic level high when $V_{OUT}$ is above the power-good threshold. See *Power-Good* for more information. |
| SI | 9 | I | Sense input pin. Connect via an external voltage divider to the supply voltage to be monitored. |
| SO | 3 | O | Sense output pin. This pin has an internal pullup resistor. Do not connect this pin to $V_{OUT}$ or any other biased voltage rail. $V_{SO}$ is logic level low when $V_{SI}$ falls below the sense-low threshold. |
| IN | 10 | P | Input power-supply voltage pin. For best transient response and to minimize input impedance, use the recommended value or larger ceramic capacitor from IN to ground as listed in the *Recommended Operating Conditions* table and the *Input Capacitor* section. Place the input capacitor as close to the input of the device as possible. |
| OUT | 1 | O | Regulated output voltage pin. A capacitor is required from OUT to ground for stability. For best transient response, use the nominal recommended value or larger ceramic capacitor from OUT to ground; see the *Recommended Operating Conditions* table and the *Output Capacitor* section. Place the output capacitor as close to the output of the device as possible. If using a high ESR capacitor, decouple the output with a 100nF ceramic capacitor. |
| Thermal pad | | — | Thermal pad. Connect the pad to GND for the best possible thermal performance. See the *Layout* section for more information. |

(1) I = input; O = output; P = power; G = ground.

Copyright © 2026 Texas Instruments Incorporated

# 5 Specifications

## 5.1 Absolute Maximum Ratings

over operating free-air temperature range (unless otherwise noted)(1)

| | | MIN | MAX | UNIT |
|---|---|---|---|---|
| IN | Unregulated input | –0.3 | 42 | V |
| EN | Enable input | –0.3 | $V_{IN}$ + 2V(3) | V |
| OUT | Regulated output | –0.3 | $V_{IN}$ + 0.3V(2) | V |
| FB | Feedback | –0.3 | 20 | V |
| SI | Sense input | –0.3 | 42 | V |
| Delay | Reset delay input | –0.3 | 6 | V |
| SO, PG, PGADJ | Sense output, power-good, power-good adjustable threshold | –0.3 | 20 | V |
| $T_A$ | Operating ambient temperature | –40 | 125 | °C |
| $T_J$ | Operating junction temperature | –40 | 150 | °C |
| $T_{stg}$ | Storage temperature | –65 | 150 | °C |

(1) Stresses beyond those listed under *absolute maximum ratings* may cause permanent damage to the device. These are stress ratings only and functional operation of the device at these or any other conditions beyond those indicated under *recommended operating conditions* is not implied. Exposure to absolute-maximum-rated conditions for extended periods may affect device reliability.
(2) The absolute maximum rating is $V_{IN}$ + 0.3V or 20V, whichever is smaller.
(3) The absolute maximum rating is $V_{IN}$ + 2V or 42V, whichever is smaller.

## 5.2 ESD Ratings

| | | | | VALUE | UNIT |
|---|---|---|---|---|---|
| $V_{(ESD)}$ | Electrostatic discharge | Human-body model (HBM), per AEC Q100-002(1) | | ±2000 | V |
| | | Charged-device model (CDM), per AEC Q100-011 | All pins | ±500 | |
| | | | Corner pins | ±750 | |

(1) AEC Q100-002 indicates that HBM stressing shall be in accordancewith the ANSI/ESDA/JEDEC JS-001 specification.

## 5.3 Recommended Operating Conditions

over operating free-air temperature range (unless otherwise noted)

| | | MIN | TYP | MAX | UNIT |
|---|---|---|---|---|---|
| $V_{IN}$ | Input voltage | 3 | | 40 | V |
| $V_{OUT}$ | Output voltage | 1.2 | | 18 | V |
| $I_{OUT}$ | Output current | 0 | | 150 | mA |
| $V_{EN}$ | High voltage (I/O) | 0 | | $V_{IN}$ + 1V(4) | V |
| $V_{SI}$ | High voltage (I/O) | 0 | | 40 | V |
| $V_{Delay}$ | Delay pin voltage | 0 | | 5.5 | V |
| $V_{PG}$, $V_{SO}$, $V_{PGADJ}$ | Low voltage (I/O), power-good adjustable threshold | 0 | | 18 | V |
| $C_{OUT}$ | Output capacitor(2) | 2.2 | | 220 | µF |
| ESR | Output capacitor ESR requirements(3) | 0.001 | | 2 | Ω |
| $C_{IN}$ | Input capacitor(1) | 0.1 | 1 | | µF |
| $C_{Delay}$ | Power-good delay capacitor | 0 | | 1 | uF |
| $T_J$ | Operating junction temperature | –40 | | 150 | °C |

(1) For robust EMI performance the minimum input capacitance is 500nF.
(2) Effective output capacitance of 1 µF minimum required for stability.
(3) If using a large ESR capacitor it is recommended to decouple this with a 100nF ceramic capacitor to improve transient performance.
(4) The maximum recommended operating voltage is $V_{IN}$ + 1V or 40V, whichever is smaller


Copyright © 2026 Texas Instruments Incorporated

## 5.4 Thermal Information

| THERMAL METRIC[1][2] | | TPS7B85-Q1 DRC (VSON) 10 PINS | UNIT |
|---|---|---|---|
| $R_{\theta JA}$ | Junction-to-ambient thermal resistance[3] | 50.3 | °C/W |
| $R_{\theta JC(top)}$ | Junction-to-case (top) thermal resistance | 54.5 | °C/W |
| $R_{\theta JB}$ | Junction-to-board thermal resistance | 23.9 | °C/W |
| $\psi_{JT}$ | Junction-to-top characterization parameter | 1.2 | °C/W |
| $\psi_{JB}$ | Junction-to-board characterization parameter | 23.9 | °C/W |
| $R_{\theta JC(bot)}$ | Junction-to-case (bottom) thermal resistance | 7.5 | °C/W |

(1) The thermal data is based on the JEDEC standard high K profile,JESD 51-7. Two-signal, two-plane, four-layer board with 2oz. copper. The copper pad is soldered tothe thermal land pattern. Also, correct attachment procedure must be incorporated.
(2) For more information about traditional and new thermal metrics,see the *Semiconductor and IC PackageThermal Metrics* application report.
(3) The 1s0p $R_{\theta JA}$ is 202.5°C/W for the DRC package.

## 5.5 Electrical Characteristics

specified at $T_J$ = –40°C to +150°C, $V_{IN}$ = 13.5 V, $I_{OUT}$ = 0mA, $C_{OUT}$ = 2.2 µF, 1mΩ < $C_{OUT}$ ESR < 2Ω, $C_{IN}$ = 1 µF, and $V_{EN}$ = 2V (unless otherwise noted); typical values are at $T_J$ = 25°C

| PARAMETER | | TEST CONDITIONS | | MIN | TYP | MAX | UNIT |
|---|---|---|---|---|---|---|---|
| $V_{OUT}$ | Regulated output accuracy | $V_{IN}$ = $V_{OUT}$ + 500mV to 40V, $I_{OUT}$ = 100 µA to 150mA[1] | $T_J$ = 25ºC | –0.5 | | 0.5 | % |
| | | | $T_J$ = –40°C to +150ºC | –0.75 | | 0.75 | |
| $\Delta V_{OUT(\Delta VIN)}$ | Line regulation | Change in percent of output voltage | $V_{IN}$ = $V_{OUT}$ + 500mV to 40V, $I_{OUT}$ = 100 µA | | | 0.2 | % |
| $\Delta V_{OUT(\Delta IOUT)}$ | Load regulation | Change in percent of output voltage | $V_{IN}$ = $V_{OUT}$ + 500mV, $I_{OUT}$ = 100 µA to 150mA | | | 0.2 | |
| $\Delta V_{OUT}$ | Load transient response settling time[2] [3] | $C_{OUT}$ = 10 µF | $C_{OUT}$ = 10 µF | | | 100 | µs |
| | Load transient response overshoot, undershoot[3] | | $I_{OUT}$ = 45mA to 105mA | –2% | | 10% | %$V_{OUT}$ |
| | | | $I_{OUT}$ = 0mA to 150mA | –10% | | | |
| $I_Q$ | Quiescent current | $V_{IN}$ = $V_{OUT}$ + 500mV to 40V, $I_{OUT}$ = 0mA | $T_J$ = 25ºC | | 18 | 21 | µA |
| | | | $T_J$ = –40°C to +150ºC | | | 26 | |
| | | $I_{OUT}$ = 500 µA | $T_J$ = –40°C to +150ºC | | | 35 | |
| $I_{SHUTDOWN}$ | Shutdown supply current ($I_{GND}$) | $V_{EN}$ = 0V | $T_J$ = 25ºC | | | 2.5 | µA |
| | | | $T_J$ = –40°C to +150ºC | | | 4 | |
| $V_{DO}$ | Dropout voltage | $I_{OUT}$ ≤ 1mA, $V_{OUT}$ ≥ 3.3V, $V_{IN}$ = $V_{OUT(NOM)}$ x 0.95 | | | | 43 | mV |
| | | $I_{OUT}$ = 105mA, $V_{OUT}$ ≥ 3.3V, $V_{IN}$ = $V_{OUT(NOM)}$ | | | 125 | 175 | |
| | | $I_{OUT}$ = 150mA, $V_{OUT}$ ≥ 3.3V, $V_{IN}$ = $V_{OUT(NOM)}$ | | | 155 | 225 | |
| $V_{UVLO(RISING)}$ | Rising input supply UVLO | $V_{IN}$ rising | | 2.6 | 2.7 | 2.82 | V |
| $V_{UVLO(FALLING)}$ | Falling input supply UVLO | $V_{IN}$ falling | | 2.38 | 2.5 | 2.6 | V |
| $V_{UVLO(HYST)}$ | $V_{UVLO}$ hysteresis | | | | 230 | | mV |
| $V_{IL}$ | Enable logic input low level | | | | | 0.7 | V |
| $V_{IH}$ | Enable logic input high level | | | 2 | | | V |
| $I_{EN}$ | EN pin current | $V_{EN}$ = $V_{IN}$ = 13.5V | | | | 50 | nA |
| $I_{CL}$ | Output current limit | $V_{IN}$ = $V_{OUT(nom)}$ + 1V, $V_{OUT}$ short to 90% x $V_{OUT(NOM)}$ | | 180 | 220 | 260 | mA |
| PSRR | Power-supply ripple rejection | $V_{IN}$ - $V_{OUT}$ = 500mV, frequency = 1kHz, $I_{OUT}$ = 150mA | | | 55 | | dB |
| $V_n$ | Output noise voltage | $V_{OUT}$ = 3.3V, BW = 10Hz to 100kHz | | | 280 | | $\mu V_{RMS}$ |
| $V_{SI(HIGH)}$ | Sense input threshold high | $V_{SI}$ rising | | 1.17 | 1.21 | 1.25 | V |
| $V_{SI(LOW)}$ | Sense input threshold low | $V_{SI}$ falling | | 1.07 | 1.12 | 1.15 | V |

Copyright © 2026 Texas Instruments Incorporated

specified at $T_J$ = –40°C to +150°C, $V_{IN}$ = 13.5 V, $I_{OUT}$ = 0mA, $C_{OUT}$ = 2.2 µF, 1mΩ < $C_{OUT}$ ESR < 2Ω, $C_{IN}$ = 1 µF, and $V_{EN}$ = 2V (unless otherwise noted); typical values are at $T_J$ = 25°C

| PARAMETER | | TEST CONDITIONS | MIN | TYP | MAX | UNIT |
|---|---|---|---|---|---|---|
| $V_{SI(HYST)}$ | Sense input switching hysteresis | | | 90 | | mV |
| $I_{SI}$ | Sense input current | $V_{SI}$ = 40V | | 0.015 | 1.5 | µA |
| $R_{SO}$ | Sense output internal pullup resistor | | 10 | 30 | 50 | kΩ |
| $V_{SO(OL)}$ | Sense output low voltage | $V_{SI}$ ≤ 1.07V, $V_{IN}$ ≥ 3V | | | 0.4 | V |
| $R_{PG}$ | Power-good internal pullup resistor | | 10 | 30 | 50 | kΩ |
| $V_{PG(OL)}$ | PG pin low level output voltage | $V_{OUT}$ ≤ 0.83x $V_{OUT}$ | | | 0.4 | V |
| $V_{PG(TH,RISING)}$ | Default power-good threshold | $V_{OUT}$ rising, PGADJpin shorted to ground | 85 | | 95 | %$V_{OUT}$ |
| $V_{PG(TH,FALLING)}$ | | $V_{OUT}$ falling, PGADJ pin shorted to ground | 83 | | 93 | |
| $V_{PG(HYST)}$ | Power-good hysteresis | | | 2.5 | | %$V_{OUT}$ |
| $V_{PGADJ (TH,FALLING)}$ | Switching voltage for the power-good adjust pin | $V_{OUT}$ falling, PGADJ falling | 0.97 | 1 | 1.030 | V |
| $V_{PGADJ(HYST)}$ | PGADJ hysteresis | | 5 | 35 | 50 | mV |
| $V_{DLY(TH)}$ | Threshold to release power-good high | Voltage at delay pin rising | 1.17 | 1.21 | 1.25 | V |
| $I_{DLY(CHARGE)}$ | Delay capacitor charging current | $V_{DLY}$ = 1V | 1 | 1.5 | 2 | µA |
| $T_{SD(SHUTDOWN)}$ | Junction shutdown temperature | | | 175 | | °C |
| $T_{SD(HYST)}$ | Hysteresis of thermal shutdown | | | 20 | | °C |

(1) Power dissipation is limited to 2W for IC production testing purposes. The power dissipation can be higher during normal operation. Please see the thermal dissipation section for more information on how much power the device can dissipate while maintaining a junction temperature below 150°C.
(2) The settling time is measured from when $I_{OUT}$ is stepped from 45mA to 105mA to when the output voltage recovers to $V_{OUT}$ = $V_{OUT(nom)}$ - 5mV
(3) This specification is specified by design.

## 5.6 Switching Characteristics

over operating free-air temperature range (unless otherwise noted)

| PARAMETER | | TEST CONDITIONS | MIN | TYP | MAX | UNIT |
|---|---|---|---|---|---|---|
| **TIMING FOR SENSE INPUT AND OUTPUT (SI, SO)** | | | | | | |
| $t_{(PD_SO_HL)}$ | Sense high reaction time | | | 25 | | µs |
| $t_{(PD_SO_LH)}$ | Sense low reaction time | | | 30 | | µs |
| **TIMING POWER-GOOD** | | | | | | |
| $t_{(DLY_FIX)}$ | Power-good propagation delay | No capacitor connected at DELAY pin | | 100 | | µs |
| $t_{(Deglitch)}$ | Power-good deglitch time | No capacitor connected at DELAY pin | | 90 | | µs |
| $t_{(DLY)}$ | Power-good propagation delay | Delay capacitor value: $C_{(DELAY)}$ = 100nF | | 80 | | ms |


Copyright © 2026 Texas Instruments Incorporated

## 5.7 Typical Characteristics

specified at $T_J$ = –40°C to +150°C, $V_{IN}$ = 13.5 V, $I_{OUT}$ = 100 µA, $C_{OUT}$ = 2.2 µF, 1mΩ < $C_{OUT}$ ESR < 2Ω, $C_{IN}$ = 1 µF, and $V_{EN}$ = 2V (unless otherwise noted)

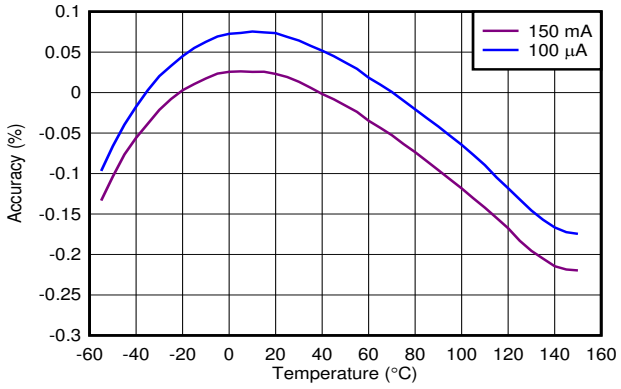


**Figure 5-1. Accuracy vs Temperature**

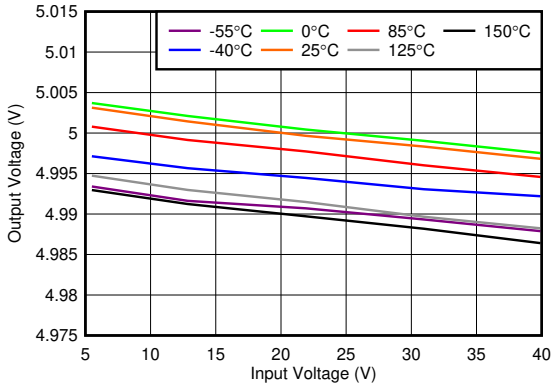


$V_{OUT}$ = 5V, $I_{OUT}$ = 150 mA

**Figure 5-2. Line Regulation vs $V_{IN}$**

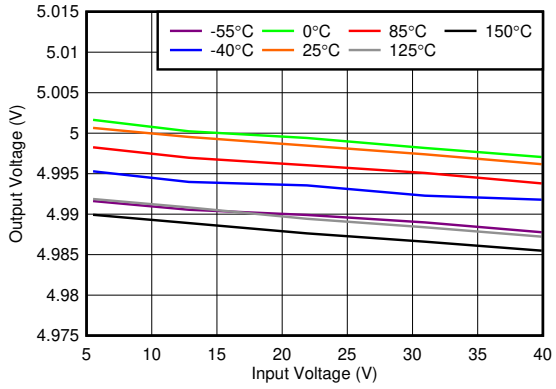


$V_{OUT}$ = 5V, $I_{OUT}$ = 5 mA

**Figure 5-3. Line Regulation vs $V_{IN}$**

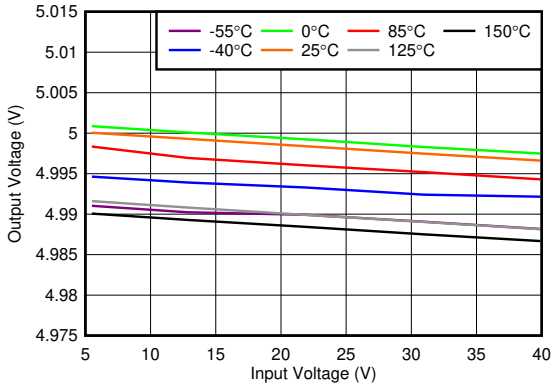


$V_{OUT}$ = 5V, $I_{OUT}$ = 1 mA

**Figure 5-4. Line Regulation vs $V_{IN}$**

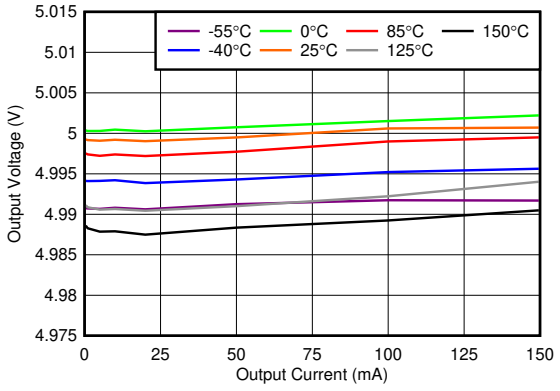


$V_{OUT}$ = 5V

**Figure 5-5. Load Regulation vs $I_{OUT}$**

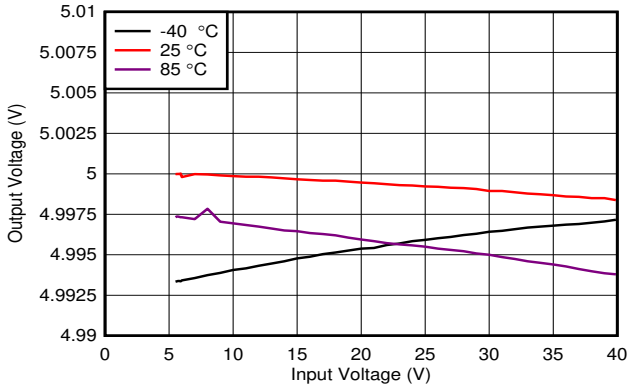


$C_{OUT}$ = 10 µF

**Figure 5-6. Line Regulation at 50 mA**

Copyright © 2026 Texas Instruments Incorporated

## 5.7 Typical Characteristics (continued)

specified at $T_J$ = –40°C to +150°C, $V_{IN}$ = 13.5 V, $I_{OUT}$ = 100 µA, $C_{OUT}$ = 2.2 µF, 1mΩ < $C_{OUT}$ ESR < 2Ω, $C_{IN}$ = 1 µF, and $V_{EN}$ = 2V (unless otherwise noted)

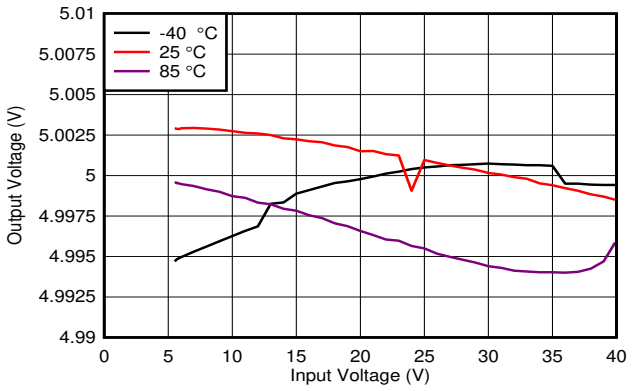


$C_{OUT}$ = 10 µF

**Figure 5-7. Line Regulation at 100 mA**

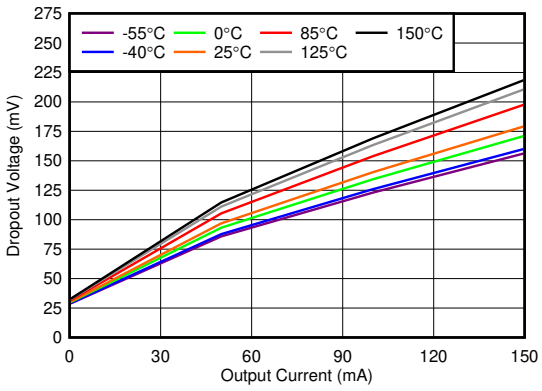


$V_{IN}$ = 3V

**Figure 5-8. Dropout Voltage ($V_{DO}$) vs $I_{OUT}$**

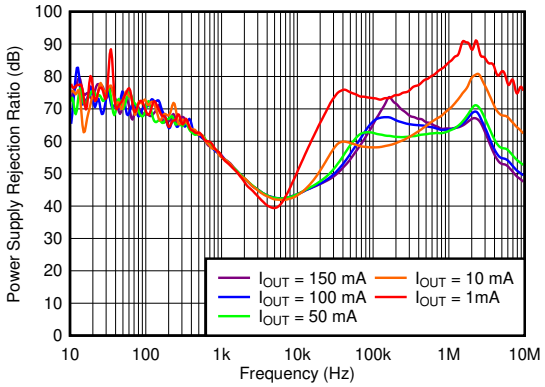


$C_{OUT}$ = 10 µF (X7R 50V), $V_{OUT}$ = 5V

**Figure 5-9. PSRR vs Frequency and $I_{OUT}$**

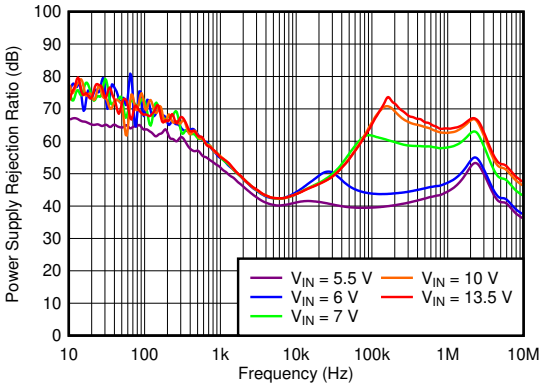


$C_{OUT}$ = 10 µF (X7R 50V), $I_{OUT}$ = 150mA, $V_{OUT}$ = 5V

**Figure 5-10. PSRR vs Frequency and $V_{IN}$**

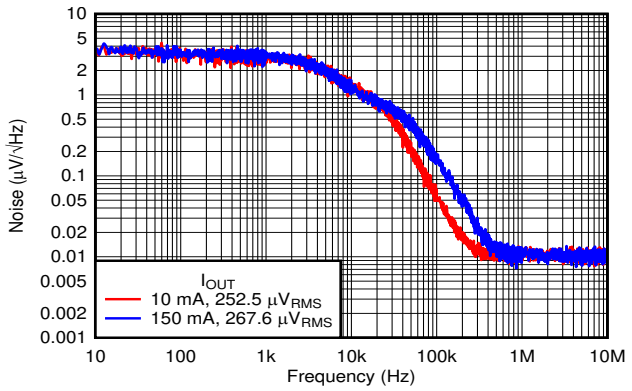


$V_{OUT}$ = 3.3V, $C_{OUT}$ = 10 µF

**Figure 5-11. Noise vs Frequency at 3.3 V**

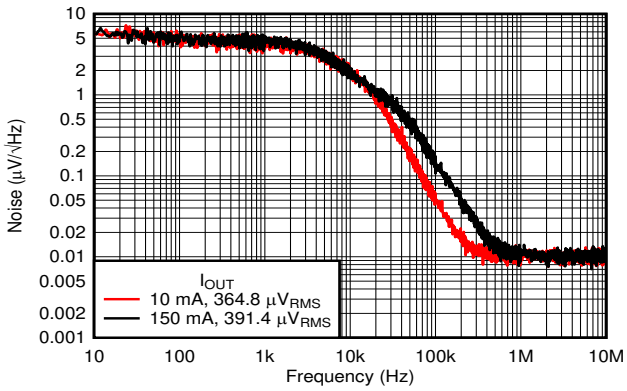


$V_{OUT}$ = 5V, $C_{OUT}$ = 10 µF

**Figure 5-12. Noise vs Frequency at 5.0 V**


Copyright © 2026 Texas Instruments Incorporated

## 5.7 Typical Characteristics (continued)

specified at $T_J$ = –40°C to +150°C, $V_{IN}$ = 13.5 V, $I_{OUT}$ = 100 µA, $C_{OUT}$ = 2.2 µF, 1mΩ < $C_{OUT}$ ESR < 2Ω, $C_{IN}$ = 1 µF, and $V_{EN}$ = 2V (unless otherwise noted)

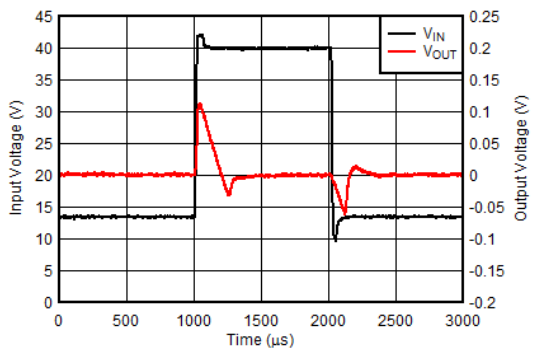


$V_{OUT}$ = 5V, $I_{OUT}$ = 1mA, $V_{IN}$ = 13.5V to 40V, slew rate = 2.7V/µs, $V_{EN}$ = 3.3V, $C_{OUT}$ = 10 µF

**Figure 5-13. Line Transients at 13.5V to 40V**

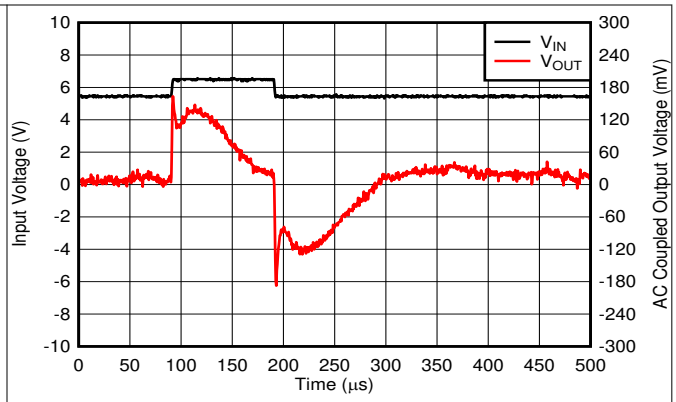


$V_{OUT}$ = 5V, $V_{IN}$ = 5.5V to 6.5V, $t_{rise}$ = 1µs, $C_{OUT}$ = 10 µF

**Figure 5-14. Line Transients at 5.5V to 6.5V**

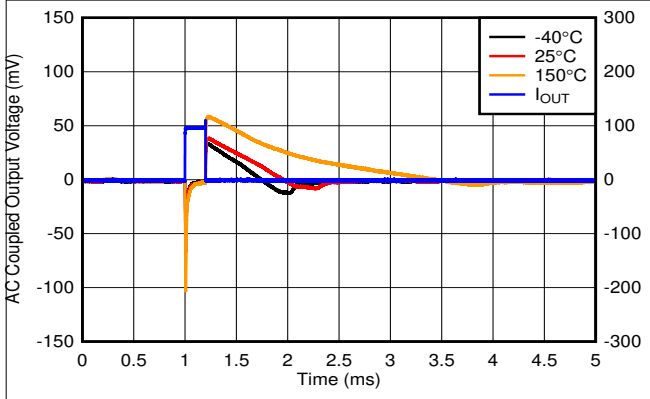


$V_{OUT}$ = 5V, $I_{OUT}$ = 0mA to 100mA, slew rate = 1A/µs, $V_{EN}$ = 3.3V, $C_{OUT}$ = 10 µF

**Figure 5-15. Load Transient, No Load to 100mA**

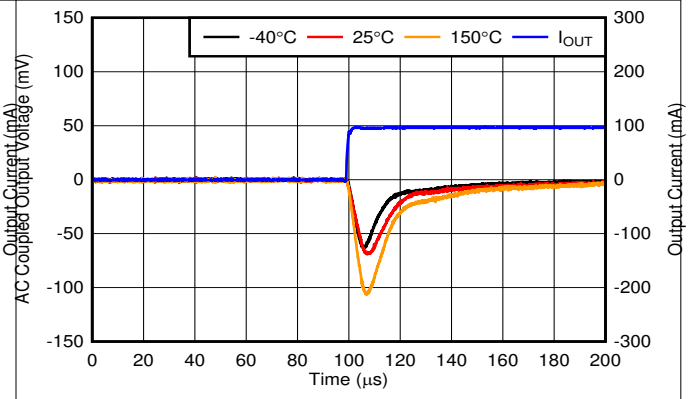


$V_{OUT}$ = 5V, $I_{OUT}$ = 0mA to 100mA, slew rate = 1A/µs, $V_{EN}$ = 3.3V, $C_{OUT}$ = 10 µF

**Figure 5-16. Load Transient, No Load to 100mA Rising Edge**

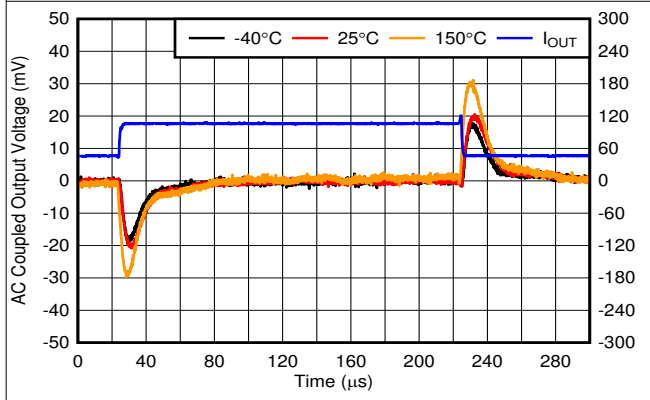


$V_{OUT}$ = 5V, $I_{OUT}$ = 45mA to 105mA, slew rate = 0.1A/µs, $V_{EN}$ = 3.3V, $C_{OUT}$ = 10 µF

**Figure 5-17. Load Transient, 45mA to 105mA**

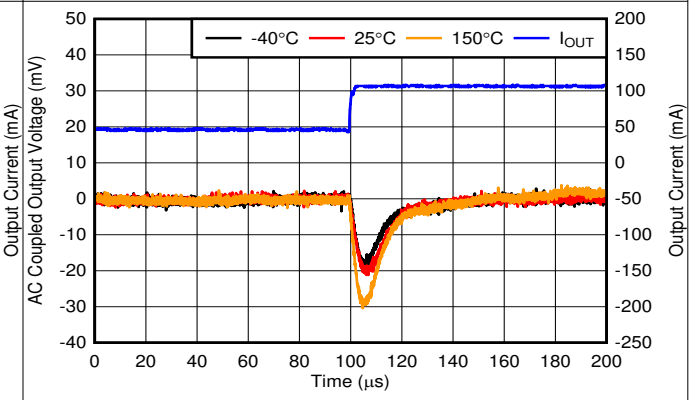


$V_{OUT}$ = 5V, $I_{OUT}$ = 45mA to 105mA, slew rate = 0.1A/µs, $V_{EN}$ = 3.3V, $C_{OUT}$ = 10 µF

**Figure 5-18. Load Transient, 45mA to 105mA Rising Edge**

Copyright © 2026 Texas Instruments Incorporated

## 5.7 Typical Characteristics (continued)

specified at $T_J$ = –40°C to +150°C, $V_{IN}$ = 13.5 V, $I_{OUT}$ = 100 µA, $C_{OUT}$ = 2.2 µF, 1mΩ < $C_{OUT}$ ESR < 2Ω, $C_{IN}$ = 1 µF, and $V_{EN}$ = 2V (unless otherwise noted)

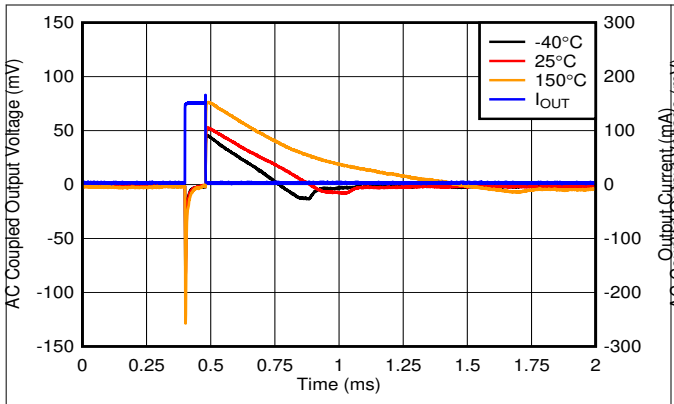


$V_{OUT}$ = 5V, $I_{OUT}$ = 0mA to 150mA, slew rate = 1A/µs, $V_{EN}$ = 3.3V, $C_{OUT}$ = 10 µF

**Figure 5-19. Load Transient, No Load to 150mA**

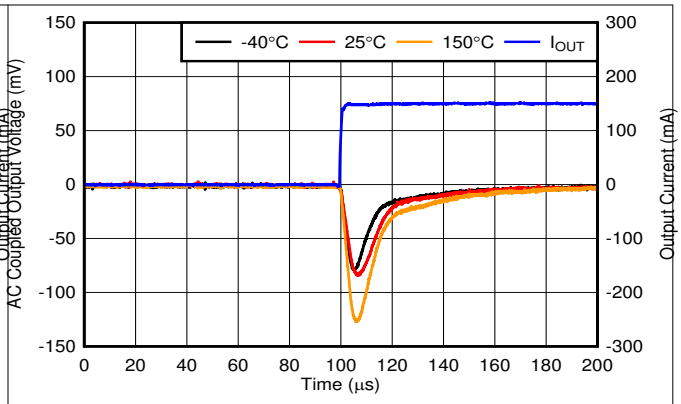


$V_{OUT}$ = 5V, $I_{OUT}$ = 0mA to 150mA, slew rate = 1A/µs, $V_{EN}$ = 3.3V, $C_{OUT}$ = 10 µF

**Figure 5-20. Load Transient, No Load to 150mA Rising Edge**

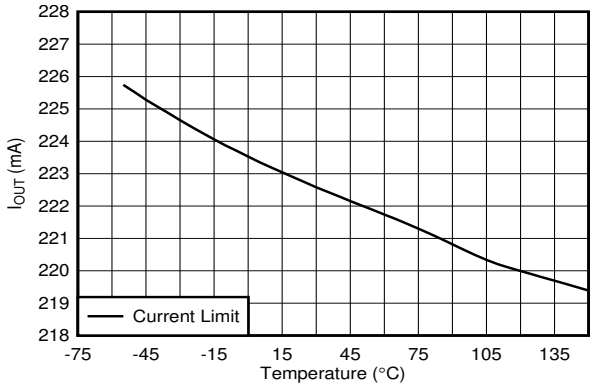


$V_{IN}$ = $V_{OUT}$ + 1V, $V_{OUT}$ = 90% × $V_{OUT(NOM)}$

**Figure 5-21. Output Current Limit vs Temperature**

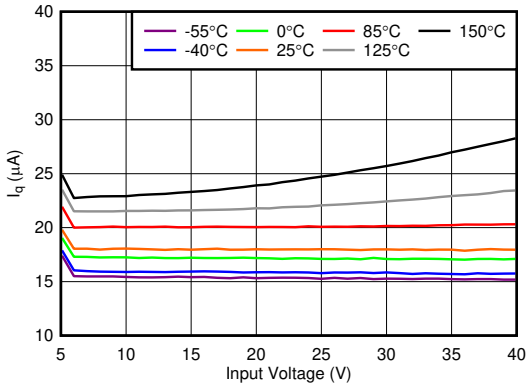


$V_{OUT}$ = 5V

**Figure 5-22. Quiescent Current ($I_Q$) vs $V_{IN}$**

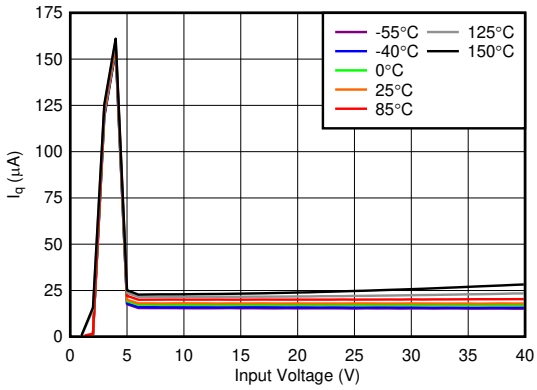


$V_{OUT}$ = 5V

**Figure 5-23. Quiescent Current ($I_Q$) vs $V_{IN}$**

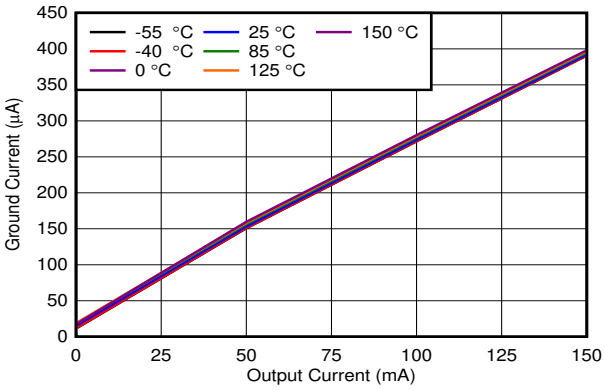


**Figure 5-24. Ground Current ($I_{GND}$) vs $I_{OUT}$**


Copyright © 2026 Texas Instruments Incorporated

## 5.7 Typical Characteristics (continued)

specified at $T_J$ = –40°C to +150°C, $V_{IN}$ = 13.5 V, $I_{OUT}$ = 100 µA, $C_{OUT}$ = 2.2 µF, 1mΩ < $C_{OUT}$ ESR < 2Ω, $C_{IN}$ = 1 µF, and $V_{EN}$ = 2V (unless otherwise noted)

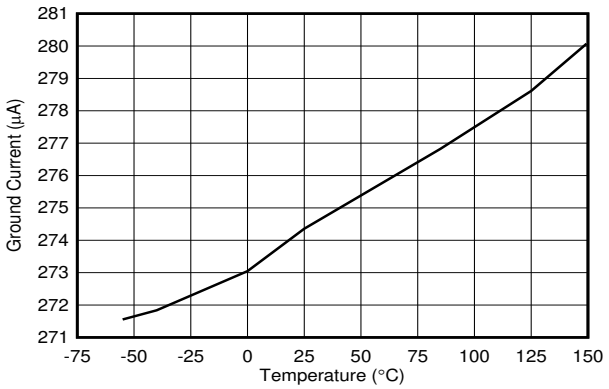


$I_{OUT}$ = 100mA

**Figure 5-25. Ground Current**

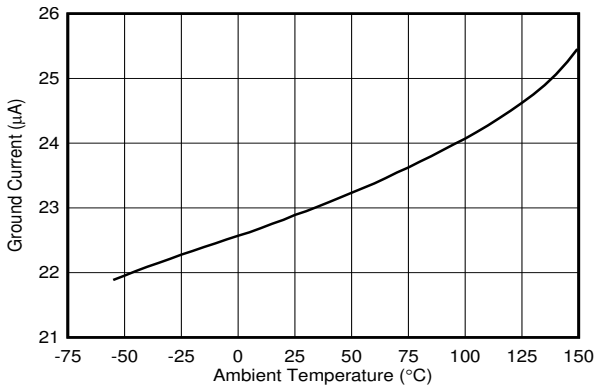


$I_{OUT}$ = 500 µA

**Figure 5-26. Ground Current**

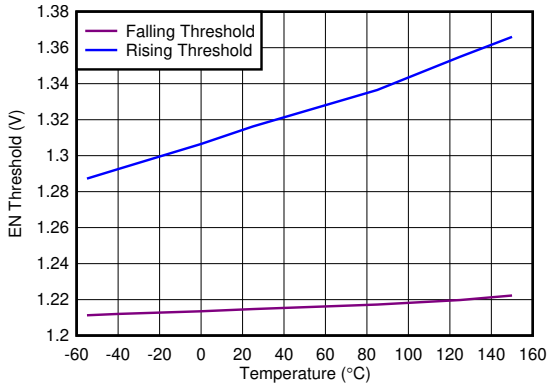


**Figure 5-27. EN Threshold vs Temperature**

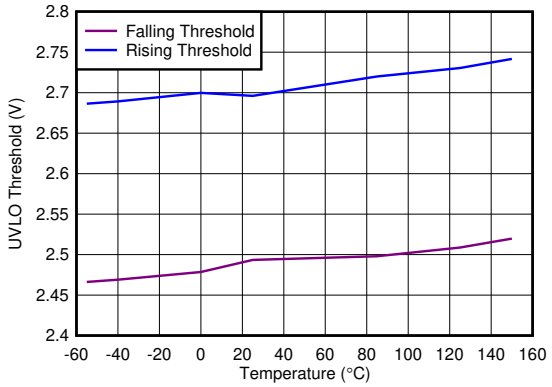


**Figure 5-28. Undervoltage Lockout (UVLO) Threshold vs Temperature**

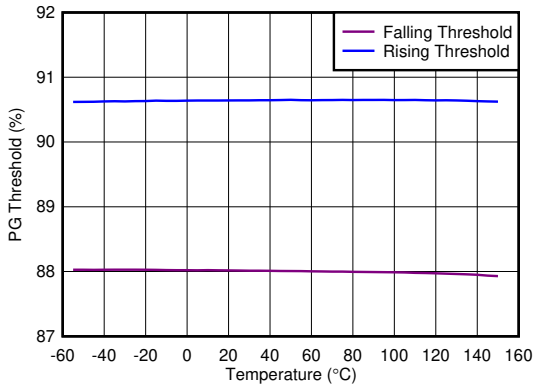


**Figure 5-29. PG Threshold vs Temperature**

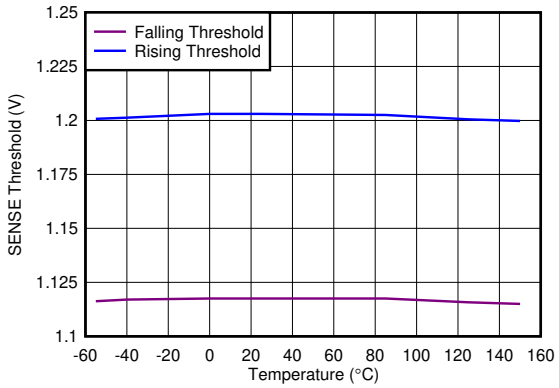


**Figure 5-30. Sense Input Threshold vs Temperature**

Copyright © 2026 Texas Instruments Incorporated

## 5.7 Typical Characteristics (continued)

specified at $T_J$ = –40°C to +150°C, $V_{IN}$ = 13.5 V, $I_{OUT}$ = 100 µA, $C_{OUT}$ = 2.2 µF, 1mΩ < $C_{OUT}$ ESR < 2Ω, $C_{IN}$ = 1 µF, and $V_{EN}$ = 2V (unless otherwise noted)

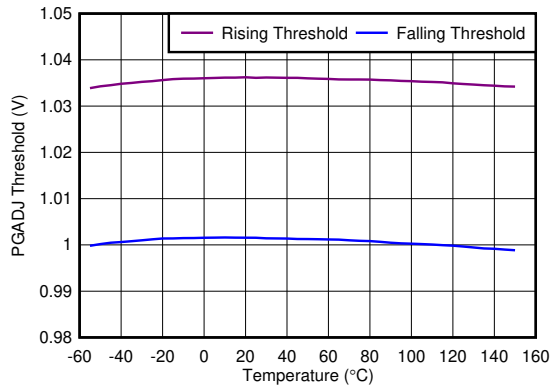


**Figure 5-31. PGADJ Threshold vs Temperature**

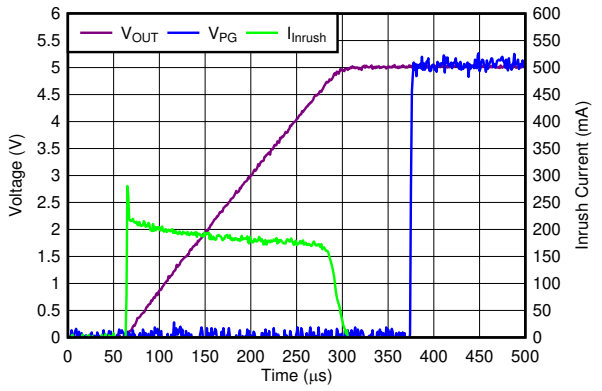


$C_{OUT}$ = 10 µF

**Figure 5-32. Startup Plot Inrush Current**

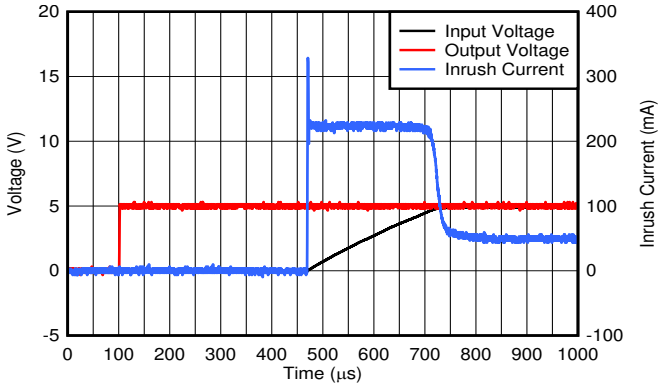


$V_{IN}$ = 13.5V, $C_{OUT}$ = 10 µF

**Figure 5-33. Startup Plot With EN**

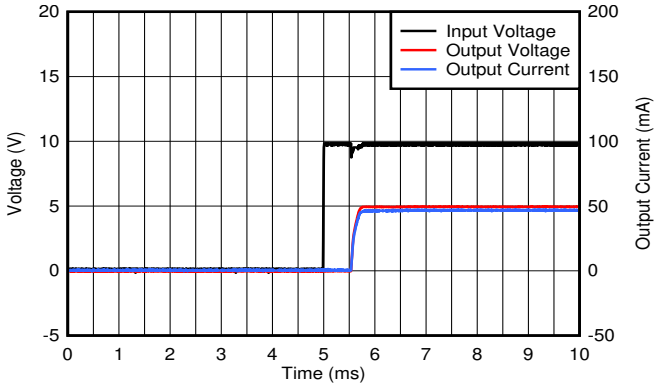


$C_{OUT}$ = 10 µF

**Figure 5-34. Startup Plot**

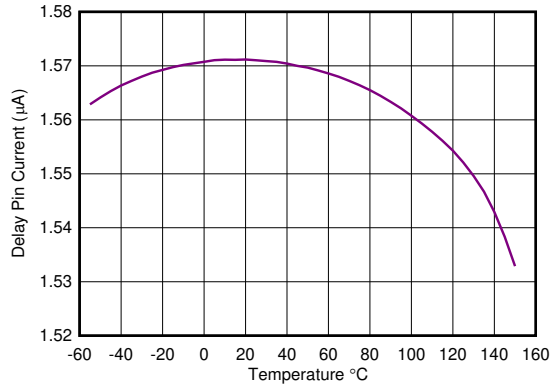


$V_{DELAY}$ = 1V

**Figure 5-35. Delay Pin Current vs Temperature**

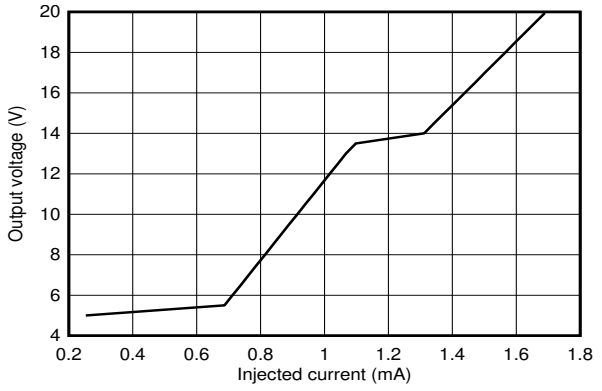


**Figure 5-36. Output Voltage vs Injected Current**


Copyright © 2026 Texas Instruments Incorporated

## 5.7 Typical Characteristics (continued)

specified at $T_J$ = –40°C to +150°C, $V_{IN}$ = 13.5 V, $I_{OUT}$ = 100 µA, $C_{OUT}$ = 2.2 µF, 1mΩ < $C_{OUT}$ ESR < 2Ω, $C_{IN}$ = 1 µF, and $V_{EN}$ = 2V (unless otherwise noted)

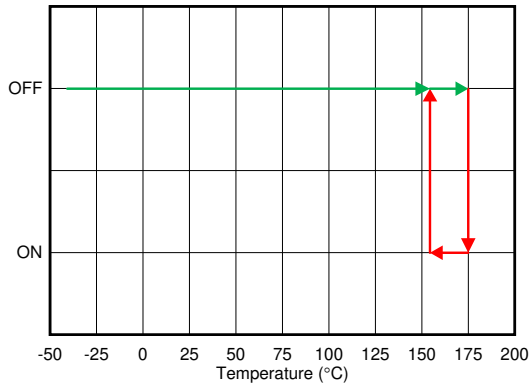


**Figure 5-37. Thermal Shutdown**

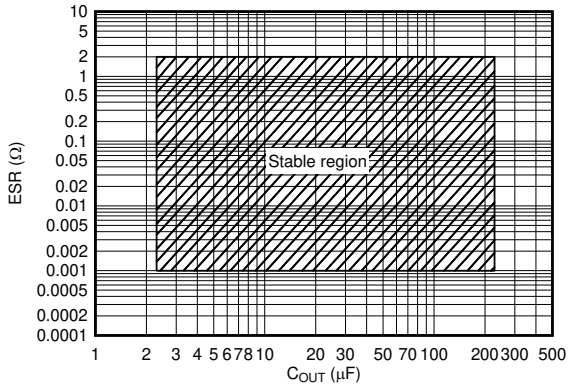


**Figure 5-38. Stability ESR vs $C_{OUT}$**

# 6 Detailed Description

## 6.1 Overview

The TPS7B85-Q1 is a low-dropout linear regulator (LDO) designed to connect to the battery in automotive applications. The device has an input voltage range extending to 40V, which allows the device to withstand transients (such as load dumps) that are anticipated in automotive systems. With only a 18-µA quiescent current at light loads, the device is an optimal solution for powering always-on components.

The device has a state-of-the-art transient response that allows the output to quickly react to changes in the load or line (for example, during cold-crank conditions). Additionally, the device has a novel architecture that minimizes output overshoot when recovering from dropout. During normal operation, the device has a tight DC accuracy of ±0.75% over line, load, and temperature.

The TPS7B85-Q1 is equipped with power-good and integrated voltage monitoring. The power-good delay and voltage threshold can be adjusted by external components. The integrated voltage detector can be used to monitor the input voltage and alert downstream components (such as MCUs) when the battery voltage begins to fall.

## 6.2 Functional Block Diagram

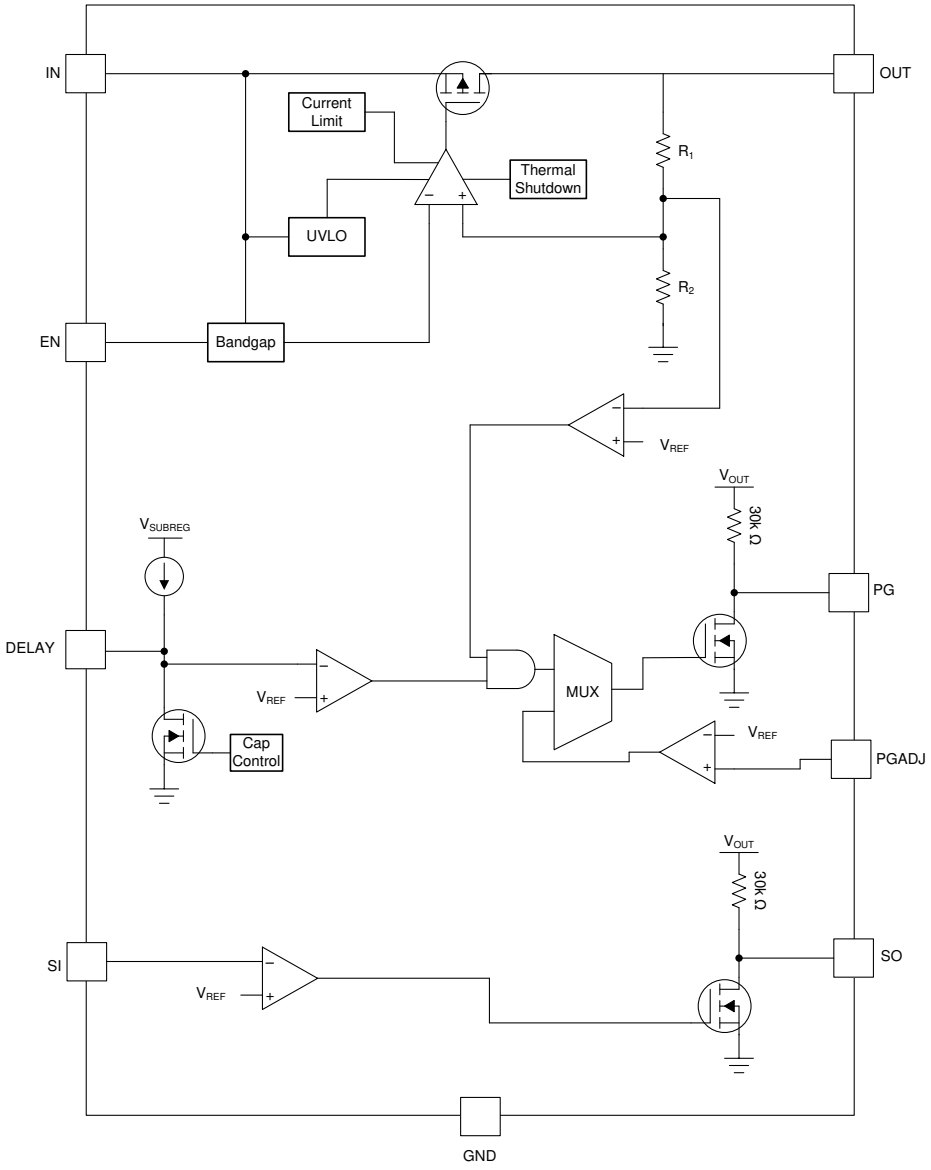



Copyright © 2026 Texas Instruments Incorporated

## 6.3 Feature Description

### 6.3.1 Enable (EN)

The enable pin for the device is an active-high pin. The output voltage is enabled when the voltage of the enable pin is greater than the high-level input voltage of the EN pin and disabled with the enable pin voltage is less than the low-level input voltage of the EN pin. If independent control of the output voltage is not needed, connect the enable pin to the input of the device.

### 6.3.2 Power-Good (PG)

The PG signal provides an easy solution to meet demanding sequencing requirements because PG alerts when the output nears its nominal value. PG can be used to signal other devices in a system when the output voltage is near, at, or above the set output voltage ($V_{OUT(nom)}$). Figure 6-1 shows a simplified schematic. The PG signal has an internal pullup resistor to the nominal output voltage and is active high. The PG circuit sets the PG pin into a high-impedance state to indicate that the power is good.

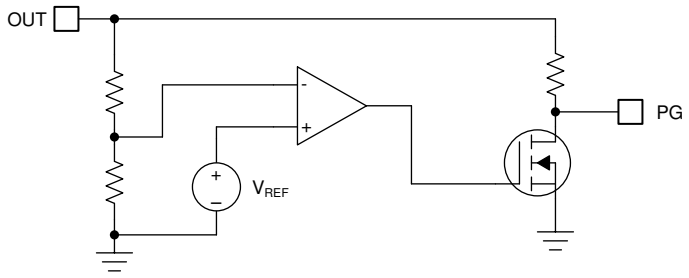


**Figure 6-1. Simplified Power-Good Schematic**

#### 6.3.2.1 Adjustable Power-Good (PGADJ)

One unique feature of this LDO, as shown in Figure 6-2, is the ability to adjust the power-good threshold through the use of a resistor divider. The adjustable power-good threshold allows the PG threshold to be set to the desired level to further assist in transient detection or sequencing requirements. If this feature is not desired, then tie the PGADJ pin to GND and the default PG threshold is used. For more information on how to calculate the power-good threshold, see the *Setting the Adjustable Power-Good Delay* section.

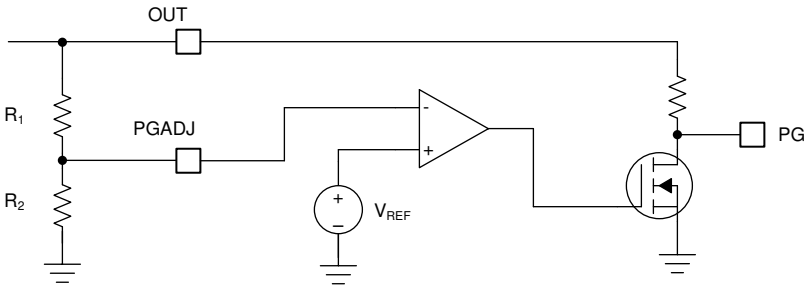


**Figure 6-2. Typical Use of Power-Good Adjust Pin**

### 6.3.3 Adjustable Power-Good Delay Timer (DELAY)

The power-good delay period is a function of the external capacitor on the DELAY pin. The adjustable delay configures the amount of time required before the PG pin becomes high. This delay is configured by connecting an external capacitor from this pin to GND. Figure 6-3 illustrates the typical timing diagram for the power-good delay pin. If the DELAY pin is left floating, the power-good delay is $t_{(DLY_FIX)}$. For more information on how to program the PG delay, see the *Setting the Adjustable Power-Good Delay* section.

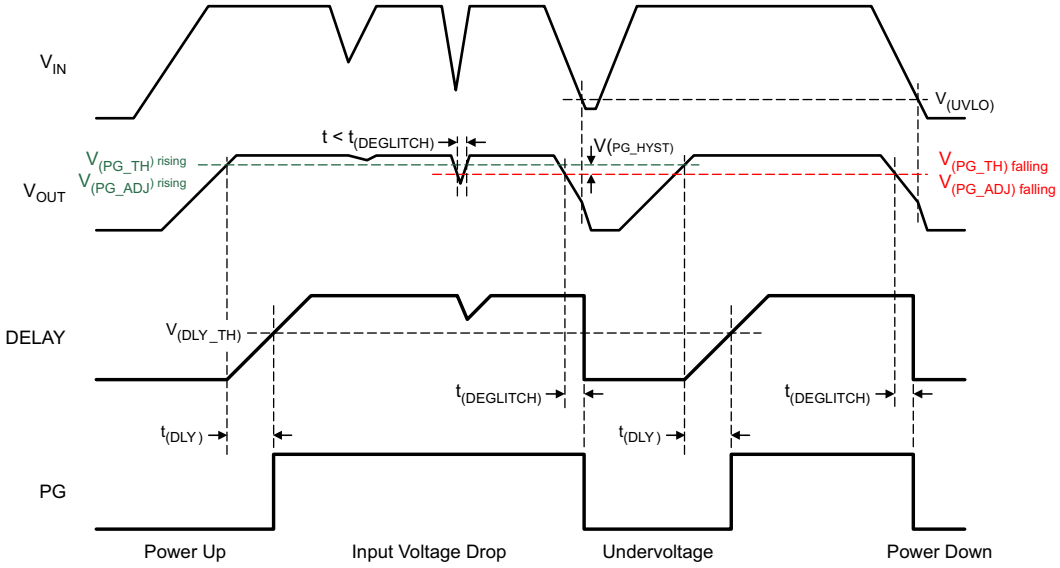


$V_{(PG_TH)\ falling} = V_{(PG_TH)\ rising} - V_{(PG_HYST)}$.

**Figure 6-3. Typical Power-Good Timing Diagram**

### 6.3.4 Sense Comparator

The sense comparator compares the input signal with an internal voltage reference of 1.223V for a rising threshold and 1.123V for a falling threshold. Using an external voltage divider makes this comparator very flexible in the application.

The device can supervise the input voltage either before or after the protection diode and provides additional information to the microprocessor (such as low-voltage warnings).

### 6.3.5 Undervoltage Lockout

The device has an independent undervoltage lockout (UVLO) circuit that monitors the input voltage, allowing a controlled and consistent turn on and off of the output voltage. To prevent the device from turning off if the input drops during turn on, the UVLO has hysteresis as specified in the *Electrical Characteristics* table.

### 6.3.6 Thermal Shutdown

The device contains a thermal shutdown protection circuit to disable the device when the junction temperature ($T_J$) of the pass transistor rises to $T_{SD(shutdown)}$ (typical). Thermal shutdown hysteresis assures that the device resets (turns on) when the temperature falls to $T_{SD(reset)}$ (typical).

The thermal time-constant of the semiconductor die is fairly short, thus the device can cycle on and off when thermal shutdown is reached until power dissipation is reduced. Power dissipation during startup can be high from large $V_{IN}$ – $V_{OUT}$ voltage drops across the device or from high inrush currents charging large output capacitors. Under some conditions, the thermal shutdown protection disables the device before startup completes.

For reliable operation, limit the junction temperature to the maximum listed in the *Recommended Operating Conditions* table. Operation above this maximum temperature causes the device to exceed its operational specifications. Although the internal protection circuitry of the device is designed to protect against thermal overall conditions, this circuitry is not intended to replace proper heat sinking. Continuously running the device into thermal shutdown or above the maximum recommended junction temperature reduces long-term reliability.

### 6.3.7 Current Limit

The device has an internal current limit circuit that protects the regulator during transient high-load current faults or shorting events. The current limit is a brickwall scheme. In a high-load current fault, the brickwall scheme limits the output current to the current limit ($I_{CL}$). $I_{CL}$ is listed in the *Electrical Characteristics* table.


Copyright © 2026 Texas Instruments Incorporated

The output voltage is not regulated when the device is in current limit. When a current limit event occurs, the device begins to heat up because of the increase in power dissipation. When the device is in brickwall current limit, the pass transistor dissipates power [($V_{IN}$ – $V_{OUT}$) × $I_{CL}$]. If thermal shutdown is triggered, the device turns off. After the device cools down, the internal thermal shutdown circuit turns the device back on. If the output current fault condition continues, the device cycles between current limit and thermal shutdown. For more information on current limits, see the *Know Your Limits* application report.

Figure 6-4 shows a diagram of the current limit.

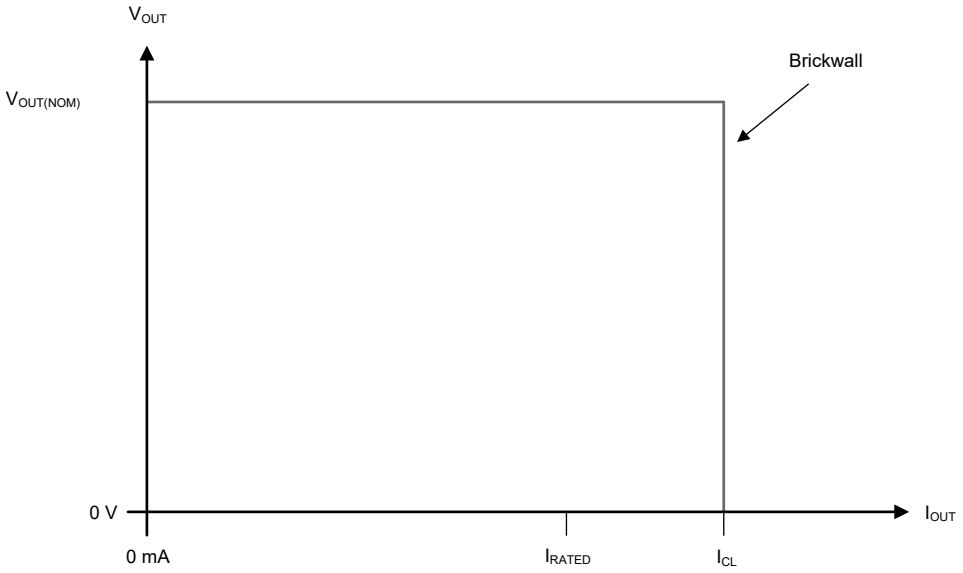


**Figure 6-4. Current Limit**

## 6.4 Device Functional Modes

### 6.4.1 Device Functional Mode Comparison

The *Device Functional Mode Comparison* table shows the conditions that lead to the different modes of operation. See the *Electrical Characteristics* table for parameter values.

**Table 6-1. Device Functional Mode Comparison**

| OPERATING MODE | PARAMETER | | | |
|---|---|---|---|---|
| | $V_{IN}$ | $V_{EN}$ | $I_{OUT}$ | $T_J$ |
| Normal operation | $V_{IN} > V_{OUT(nom)} + V_{DO}$ and $V_{IN} > V_{IN(min)}$ | $V_{EN} > V_{EN(HI)}$ | $I_{OUT} < I_{OUT(max)}$ | $T_J < T_{SD(shutdown)}$ |
| Dropout operation | $V_{IN(min)} < V_{IN} < V_{OUT(nom)} + V_{DO}$ | $V_{EN} > V_{EN(HI)}$ | $I_{OUT} < I_{OUT(max)}$ | $T_J < T_{SD(shutdown)}$ |
| Disabled (any true condition disables the device) | $V_{IN} < V_{UVLO}$ | $V_{EN} < V_{EN(LOW)}$ | Not applicable | $T_J > T_{SD(shutdown)}$ |

### 6.4.2 Normal Operation

The device regulates to the nominal output voltage when the following conditions are met:

- The input voltage is greater than the nominal output voltage plus the dropout voltage ($V_{OUT(nom)} + V_{DO}$)
- The output current is less than the current limit ($I_{OUT} < I_{CL}$)
- The device junction temperature is less than the thermal shutdown temperature ($T_J < T_{SD}$)
- The enable voltage has previously exceeded the enable rising threshold voltage and has not yet decreased to less than the enable falling threshold

### 6.4.3 Dropout Operation

If the input voltage is lower than the nominal output voltage plus the specified dropout voltage, but all other conditions are met for normal operation, the device operates in dropout mode. In this mode, the output voltage tracks the input voltage. During this mode, the transient performance of the device becomes significantly degraded because the pass transistor is in the ohmic or triode region, and acts as a switch. Line or load transients in dropout can result in large output-voltage deviations.

When the device is in a steady dropout state (defined as when the device is in dropout, $V_{IN} < V_{OUT(NOM)} + V_{DO}$, directly after being in a normal regulation state, but *not* during startup), the pass transistor is driven into the ohmic or triode region. When the input voltage returns to a value greater than or equal to the nominal output voltage plus the dropout voltage ($V_{OUT(NOM)} + V_{DO}$), the output voltage can overshoot for a short period of time while the device pulls the pass transistor back into the linear region.

### 6.4.4 Disabled

The output of the device can be shutdown by forcing the voltage of the enable pin to less than the maximum EN pin low-level input voltage (see the *Electrical Characteristics* table). When disabled, the pass transistor is turned off, internal circuits are shutdown, and the output voltage is actively discharged to ground by an internal discharge circuit from the output to ground.


Copyright © 2026 Texas Instruments Incorporated

# 7 Application and Implementation

**Note**

Information in the following applications sections is not part of the TI component specification, and TI does not warrant its accuracy or completeness. TI's customers are responsible for determining suitability of components for their purposes, as well as validating and testing their design implementation to confirm system functionality.

## 7.1 Application Information

### *7.1.1 Input and Output Capacitor Selection*

The TPS7B85-Q1 requires an output capacitor of 2.2 µF or larger (1 µF or larger capacitance) for stability and an equivalent series resistance (ESR) between 0.001Ω and 2Ω. For the best transient performance, use X5R- and X7R-type ceramic capacitors because these capacitors have minimal variation in value and ESR over temperature. When choosing a capacitor for a specific application, be mindful of the DC bias characteristics for the capacitor. Higher output voltages cause a significant derating of the capacitor. For best performance, the maximum recommended output capacitance is 220 µF.

Although an input capacitor is not required for stability, good analog design practice is to connect a capacitor from IN to GND. Some input supplies have a high impedance, thus placing the input capacitor on the input supply helps reduce the input impedance. This capacitor counteracts reactive input sources and improves transient response, input ripple, and PSRR. If the input supply has a high impedance over a large range of frequencies, several input capacitors can be used in parallel to lower the impedance over frequency. Use a higher-value capacitor if large, fast, rise-time load transients are anticipated, or if the device is located several inches from the input power source.

### *7.1.2 Dropout Voltage*

Dropout voltage ($V_{DO}$) is defined as the input voltage minus the output voltage ($V_{IN} – V_{OUT}$) at the rated output current ($I_{RATED}$), where the pass transistor is fully on. $I_{RATED}$ is the maximum $I_{OUT}$ listed in the *Recommended Operating Conditions* table. The pass transistor is in the ohmic or triode region of operation, and acts as a switch. The dropout voltage indirectly specifies a minimum input voltage greater than the nominal programmed output voltage at which the output voltage is expected to stay in regulation. If the input voltage falls to less than the nominal output regulation, then the output voltage falls as well.

For a CMOS regulator, the dropout voltage is determined by the drain-source on-state resistance ($R_{DS(ON)}$) of the pass transistor. Therefore, if the linear regulator operates at less than the rated current, the dropout voltage for that current scales accordingly. The following equation calculates the $R_{DS(ON)}$ of the device.

$$R_{DS(ON)} = \frac{V_{DO}}{I_{RATED}} \quad (1)$$

### *7.1.3 Reverse Current*

Excessive reverse current can damage this device. Reverse current flows through the intrinsic body diode of the pass transistor instead of the normal conducting channel. At high magnitudes, this current flow degrades the long-term reliability of the device.

Conditions where reverse current can occur are outlined in this section, all of which can exceed the absolute maximum rating of $V_{OUT} \leq V_{IN} + 0.3V$.

- If the device has a large $C_{OUT}$ and the input supply collapses with little or no load current
- The output is biased when the input supply is not established
- The output is biased above the input supply

Copyright © 2026 Texas Instruments Incorporated

If reverse current flow is expected in the application, external protection is recommended to protect the device. Reverse current is not limited in the device, so external limiting is required if extended reverse voltage operation is anticipated.

### 7.1.4 Power Dissipation ($P_D$)

Circuit reliability requires consideration of the device power dissipation, location of the circuit on the printed circuit board (PCB), and correct sizing of the thermal plane. The PCB area around the regulator must have few or no other heat-generating devices that cause added thermal stress.

To first-order approximation, power dissipation in the regulator depends on the input-to-output voltage difference and load conditions. The following equation calculates power dissipation ($P_D$).

$$P_D = (V_{IN} – V_{OUT}) \times I_{OUT} \quad (2)$$

**Note**

Power dissipation can be minimized, and therefore greater efficiency can be achieved, by correct selection of the system voltage rails. For the lowest power dissipation use the minimum input voltage required for correct output regulation.

For devices with a thermal pad, the primary heat conduction path for the device package is through the thermal pad to the PCB. Solder the thermal pad to a copper pad area under the device. This pad area must contain an array of plated vias that conduct heat to additional copper planes for increased heat dissipation.

The maximum power dissipation determines the maximum allowable ambient temperature ($T_A$) for the device. According to the following equation, power dissipation and junction temperature are most often related by the junction-to-ambient thermal resistance ($R_{\theta JA}$) of the combined PCB and device package and the temperature of the ambient air ($T_A$).

$$T_J = T_A + (R_{\theta JA} \times P_D) \quad (3)$$

Thermal resistance ($R_{\theta JA}$) is highly dependent on the heat-spreading capability built into the particular PCB design, and therefore varies according to the total copper area, copper weight, and location of the planes. The junction-to-ambient thermal resistance listed in the *Thermal Information* table is determined by the JEDEC standard PCB and copper-spreading area, and is used as a relative measure of package thermal performance.

#### 7.1.4.1 Thermal Performance Versus Copper Area

The most used thermal resistance parameter, $R_{\theta JA}$, is highly dependent on the heat-spreading capability built into the particular PCB design, and therefore varies according to the total copper area, copper weight, and location of the planes. The $R_{\theta JA}$ recorded in the *Thermal Information* table in the *Specifications* section is determined by the JEDEC standard (see Figure 7-1), PCB, and copper-spreading area, and is only used as a relative measure of package thermal performance. For a well-designed thermal layout, $R_{\theta JA}$ is actually the sum of the package junction-to-case (bottom) thermal resistance ($R_{\theta JCbot}$) plus the thermal resistance contribution by the PCB copper.


Copyright © 2026 Texas Instruments Incorporated

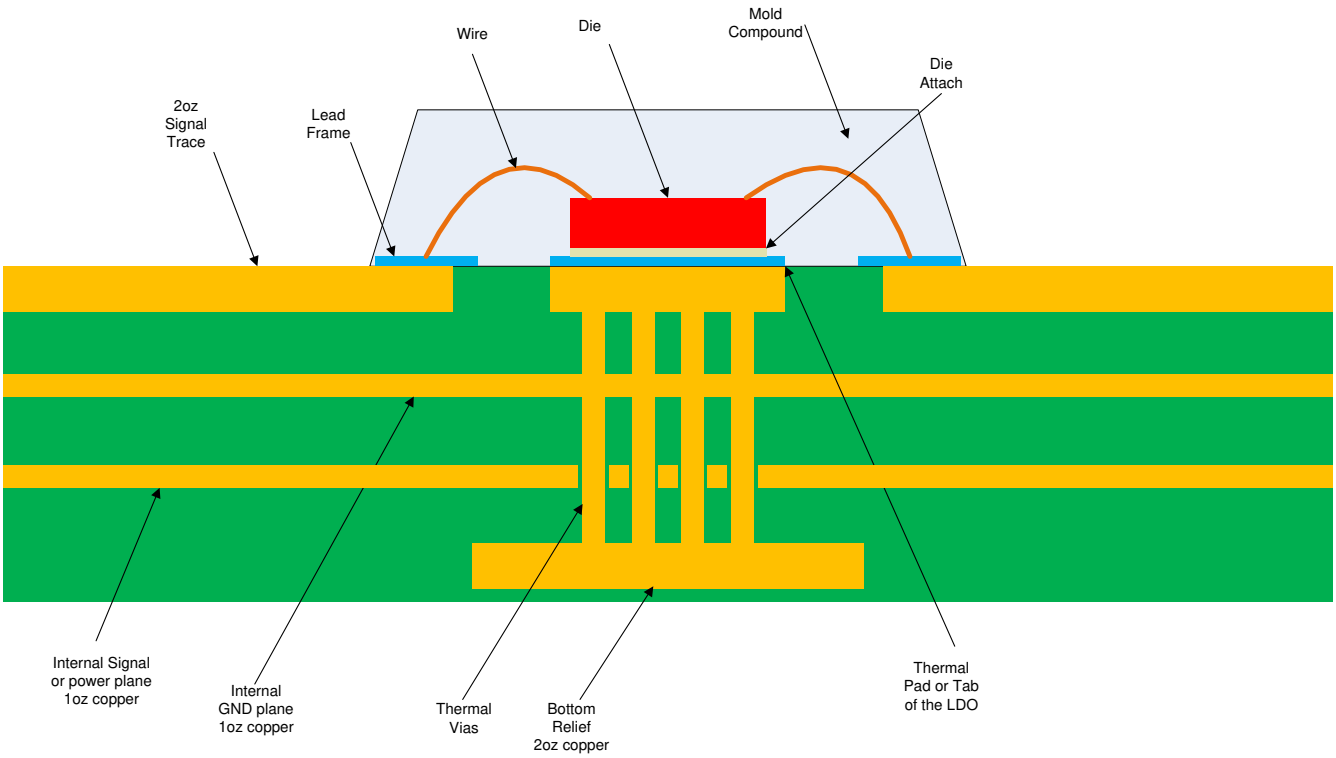


**Figure 7-1. JEDEC Standard 2s2p PCB**

Figure 7-2 and Figure 7-3 depict the functions of $R_{\theta JA}$ and $\psi_{JB}$ versus copper area and thickness. These plots are generated with a 101.6mm x 101.6mm x 1.6mm PCB of two and four layers. For the four-layer board, the inner planes use a 1oz copper thickness. Outer layers are simulated with both a 1oz and 2oz copper thickness. A 4x 4 array of thermal vias of 300-µm drill diameter and 25-µm Cu plating is located beneath the thermal pad of the device. The thermal vias connect the top layer, the bottom layer and, in the case of the 4-layer board, the first inner GND plane. Each of the layers has a copper plane of equal area.

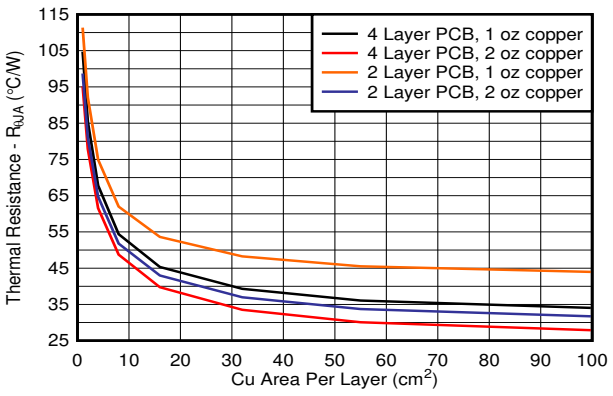


**Figure 7-2. $R_{\theta JA}$ vs Copper Area 2s2p DRC Package**

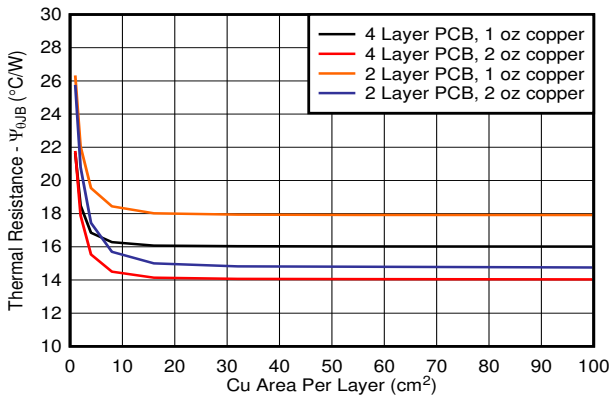


**Figure 7-3. R $\psi_{JB}$ vs Copper Area 2s2p DRC Package**

Copyright © 2026 Texas Instruments Incorporated

### 7.1.5 Estimating Junction Temperature

The JEDEC standard now recommends using psi (Ψ) thermal metrics to estimate the linear regulator junction temperatures when in-circuit on a typical PCB board application. These metrics are not thermal resistance parameters and instead offer a practical and relative way to estimate junction temperature. These psi metrics are determined to be significantly independent of the copper area available for heat-spreading. The *Thermal Information* table lists the primary thermal metrics, which are the junction-to-top characterization parameter ($\psi_{JT}$) and junction-to-board characterization parameter ($\psi_{JB}$). These parameters provide two methods for calculating the junction temperature ($T_J$), as described in the following equations. Use the junction-to-top characterization parameter ($\psi_{JT}$) with the temperature at the center-top of device package ($T_T$) to calculate the junction temperature. Use the junction-to-board characterization parameter ($\psi_{JB}$) with the printed circuit board (PCB) surface temperature 1mm from the device package ($T_B$) to calculate the junction temperature.

$$T_J = T_T + \psi_{JT} \times P_D \tag{4}$$

where:

- $P_D$ is the dissipated power
- $T_T$ is the temperature at the center-top of the device package

$$T_J = T_B + \psi_{JB} \times P_D \tag{5}$$

where:

- $T_B$ is the PCB surface temperature measured 1mm from the device package and centered on the package edge

For detailed information on the thermal metrics and how to use the metrics, see the *Semiconductor and IC Package Thermal Metrics* application note.

### 7.1.6 SI Pin

#### 7.1.6.1 Calculating the Sense Input (SI) Pin Threshold

To use the SI pin, connect this pin to the rail being monitored through a resistor divider. This input can be configured as an undervoltage supervisor that can monitor voltage rails greater than 1.2V or used as an overvoltage supervisor with an inverted output. Table 7-1 lists typical 1% resistor values for undervoltage monitoring where the trip point is a 5% threshold. The resistor values can be scaled to decrease the amount of current flowing through the resistor divider, but increasing the resistor values also decreases the accuracy of the resistor divider. General practice is for the current flowing through the resistor divider to be 100 times greater than the current going into the SI pin. This practice ensures the highest possible accuracy. Equation 6 can be used to calculate the resistors required in the resistor divider for any desired falling threshold. Figure 7-4 depicts the typical timing for this comparator and Figure 7-5 illustrates a block diagram for the adjustable operation.

$$V_{mon(falling)} = V_{SI(LOW)} x \left(1 + \frac{R1}{R2}\right) \tag{6}$$


Copyright © 2026 Texas Instruments Incorporated

**Table 7-1. SI Resistor Divider Values**

| INPUT VOLTAGE (V) | 5% THRESHOLD | | |
|---|---|---|---|
| | R1 (kΩ) | R2 (kΩ) | THRESHOLD VOLTAGE (V) |
| 3.3 | 18.2 | 10 | 3.13 |
| 5 | 32.4 | 10 | 4.71 |
| 6 | 41.2 | 10 | 5.68 |
| 7 | 49.9 | 10 | 6.65 |
| 8 | 59 | 10 | 7.66 |
| 9 | 66.5 | 10 | 8.49 |
| 10 | 75.5 | 10 | 9.49 |
| 11 | 80.6 | 10 | 10.06 |
| 12 | 93.1 | 10 | 11.44 |
| 13.5 | 105 | 10 | 12.77 |

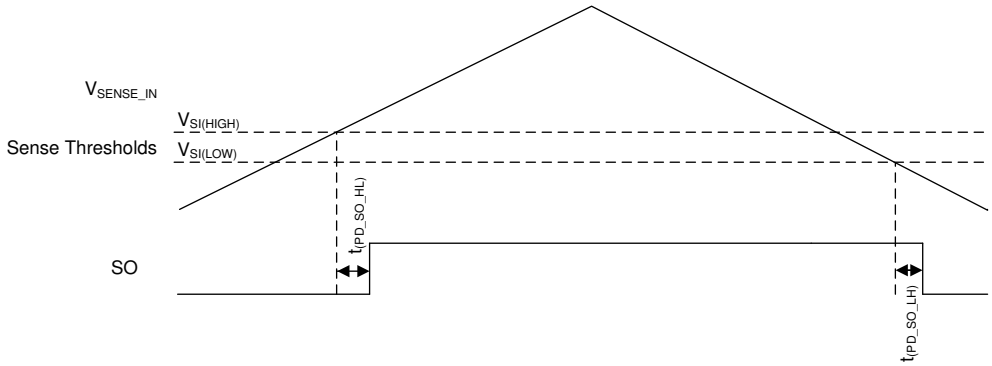


**Figure 7-4. SI Timing Diagram**

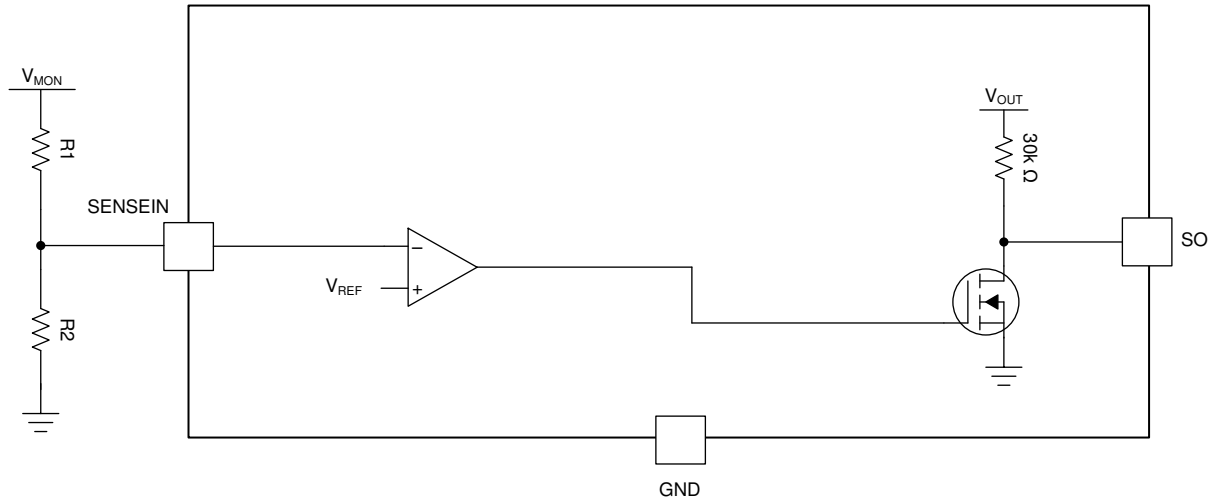


**Figure 7-5. SI Basic Block Diagram**

#### 7.1.6.2 Different Uses for the Sense Input Pin

The sense input pin incorporates a comparator with hysteresis into the LDO. The SI pin can help replace a supervisor in the system by connecting the SI pin to rails that need to be monitored. The three most common uses for this supervisor are described in the *Monitoring Input Voltage*, *Creating OV and UV Power-Good*, and *Monitoring a Separate Supply Voltage* sections.

#### 7.1.6.2.1 Monitoring Input Voltage

Monitoring the input voltage of the LDO, as shown in Figure 7-6, is the most common way that the SI pin is used. The device has a built-in precision comparator that allows the device to compare a divided-down version of the input to the internal reference of the LDO. When the voltage on the sense pin is below $V_{SI(LOW)}$, the output of the SO pin is low. However, when $V_{SI}$ crosses $V_{SI(HIGH)}$ the voltage on the SO pin gets pulled up to $V_{OUT}$ through a pullup resistor, $R_{SO}$. This pin also has built-in hysteresis to keep the pin from toggling between the two states from small changes on the SENSE voltage. Figure 7-7 shows a typical timing diagram for the SENSE pin.

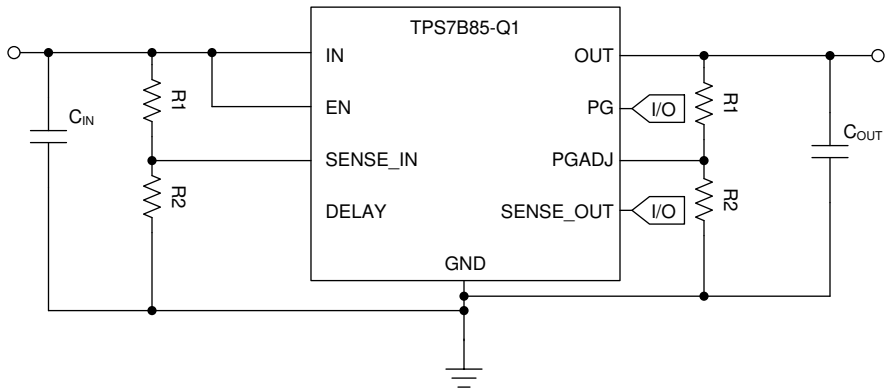


**Figure 7-6. Monitoring the Device Input Voltage**

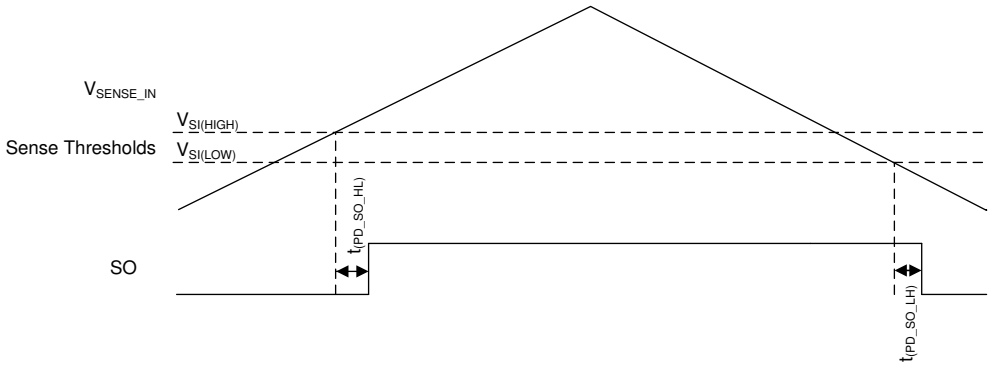


**Figure 7-7. SENSE Pin Timing Diagram**

#### 7.1.6.2.2 Creating OV and UV Power-Good

Another feature that is often desired is the ability to monitor the output voltage for overvoltage (OV) or undervoltage (UV) events. Because the integrated power-good pin only detects undervoltage events, a separate solution must be implemented to monitor for overvoltage issues. This monitoring can be done by using the integrated SI pin and connecting this pin to the output through a resistor divider. Then place the rising threshold of the SI pin where the output voltage is going to be flagged as overvoltage. Equation 7 depicts how to calculate the resistor divider for this application based on the desired overvoltage threshold. If this method is used for creating an overvoltage detection, the output of the overvoltage signal has inverted logic. Figure 7-8 shows the typical configuration for using the device as an overvotlage monitor.

$$V_{mon(rising)} = V_{SI(HIGH)} x \left(1 + \frac{R1}{R2}\right) \quad (7)$$


Copyright © 2026 Texas Instruments Incorporated

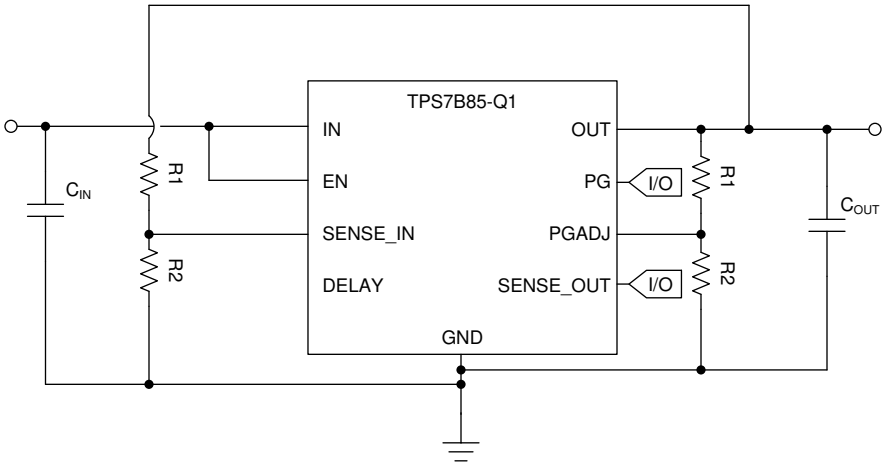


**Figure 7-8. Creating an Overvoltage Detector on the Output**

#### *7.1.6.2.3 Monitoring a Separate Supply Voltage*

One of the final applications for the SI pin is monitoring a separate supply. This method can be implemented as either an overvoltage detection or undervoltage detection for the externally monitored supply. Equation 6 and Equation 7 can be used to calculate the resistor dividers required to implement the supervision of the separate power supply. Figure 7-9 shows a block diagram for this monitoring application.

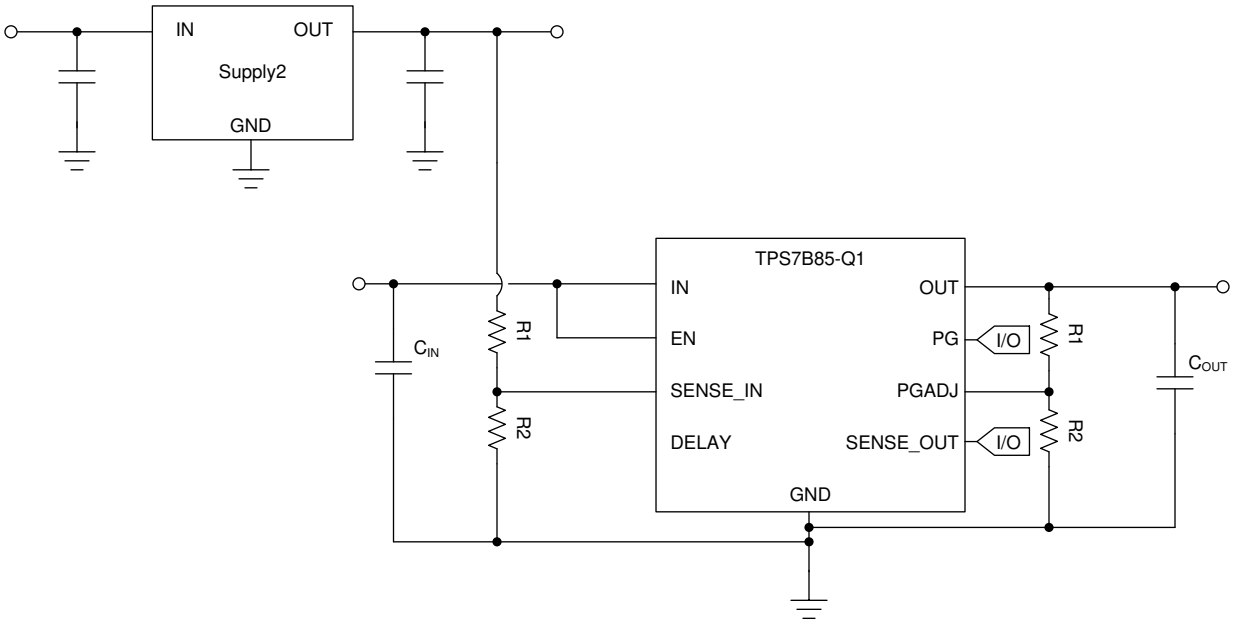


**Figure 7-9. Monitoring a Separate Power Supply**

### *7.1.7 Pulling Up the SO and PG Pins to a Different Voltage*

Because the sense out (SO) and power-good (PG) pins are pulled up internally to the output rail, they cannot be pulled up to any voltage or wire AND'd like a typical open-drain PG output can be. If these signals must be pulled up to another logic level then an external circuit can be implemented using a PMOS transistor and a pullup resistor. Implementing the circuit shown in Figure 7-10 allows the outputs to be pulled up to any logic rail. This implementation also allows the outputs to be AND'd together like the traditional power-good pins.

Copyright © 2026 Texas Instruments Incorporated

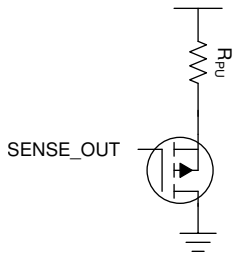


**Figure 7-10. Additional Components for the SO and PG Pins to be Pulled Up to Another Rail**

### *7.1.8 Power-Good*

#### 7.1.8.1 Setting the Adjustable Power-Good Threshold

The power-good threshold is also adjustable from 1V to 18V with an external resistor divider between PGADJ and OUT. Use Equation 8 to calculate this threshold:

$$V_{(PG_ADJ)falling} = V_{(PGADJ_TH)falling} x \left( \frac{R_1 + R_2}{R_2} \right)$$

$$V_{(PG_ADJ)rising} = \left[ V_{(PGADJ_TH)falling} + V_{PGADJ(HYST)} \right] x \left( \frac{R_1 + R_2}{R_2} \right) \quad (8)$$

where

- $V_{(PG_ADJ)\ rising}$, $V_{(PG_ADJ)\ falling}$ is the adjustable power-good threshold
- $V_{(PGADJ_TH)\ falling}$ is the internal comparator reference voltage of the PGADJ pin

By setting the power-good threshold $V_{(PG_ADJ)\ rising}$, when $V_{OUT}$ exceeds this threshold, the PG output turns high after the power-good delay period has expired. When $V_{OUT}$ falls below $V_{(PG_ADJ)\ falling}$, the PG output turns low after a short deglitch time. Figure 7-11 shows a diagram of the PG threshold.

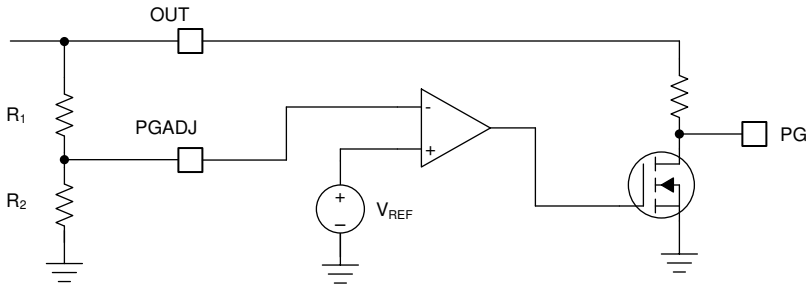


**Figure 7-11. Adjustable Power-Good Threshold**

#### 7.1.8.2 Setting the Adjustable Power-Good Delay

The power-good delay time can be set in two ways: either by floating the delay pin or by connecting a capacitor from this pin to GND. When the DELAY pin is floating, the time defaults to $t_{(DLY_FIX)}$. The delay time is set by Equation 9 if a capacitor is connected between the DELAY pin and GND.

$$t = t_{(DLY_FIX)} + C_{DELAY} \left( \frac{V_{DLY(TH)}}{I_{DLY(CHARGE)}} \right) \quad (9)$$


Copyright © 2026 Texas Instruments Incorporated

## 7.2 Typical Application

Figure 7-12 shows a typical application circuit for the TPS7B85-Q1. Use different values of external components, depending on the end application. An application may require a larger output capacitor during fast load steps in order to prevent a reset from occurring. TI recommends a low-ESR ceramic capacitor with a dielectric of type X5R or X7R.

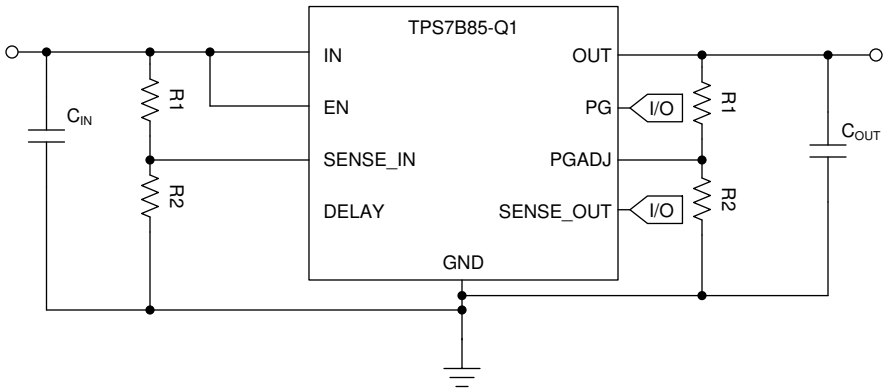


**Figure 7-12. Typical Application Schematic for the TPS7B85-Q1**

### *7.2.1 Design Requirements*

For this design example, use the parameters listed in Table 7-2 as the input parameters.

**Table 7-2. Design Parameters**

| DESIGN PARAMETER | EXAMPLE VALUE |
|---|---|
| Input voltage range | 6V to 40 V |
| Output voltage | 5V |
| Output current | 100 mA |
| Output capacitor | 10 µF |
| Power-good delay capacitor | 100 nF |
| Sense input trip threshold | 5.5 V |

### *7.2.2 Detailed Design Procedure*

#### 7.2.2.1 Input Capacitor

The device requires an input decoupling capacitor, the value of which depends on the application. The typical recommended value for the decoupling capacitor is 1 µF. The voltage rating must be greater than the maximum input voltage.

#### 7.2.2.2 Output Capacitor

The device requires an output capacitor to stabilize the output voltage. The capacitor value must be between 2.2 µF and 200 µF and the ESR range must be between 1mΩ and 2Ω. For this design a low ESR, 10-µF ceramic capacitor was used to improve transient performance.

Copyright © 2026 Texas Instruments Incorporated

### 7.2.3 Application Curves

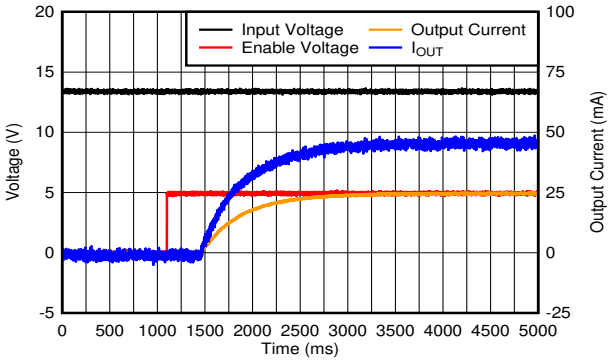


**Figure 7-13. Power-Up Waveform**

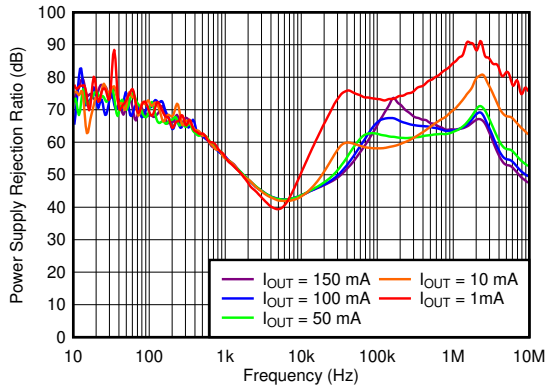


**Figure 7-14. PSRR**

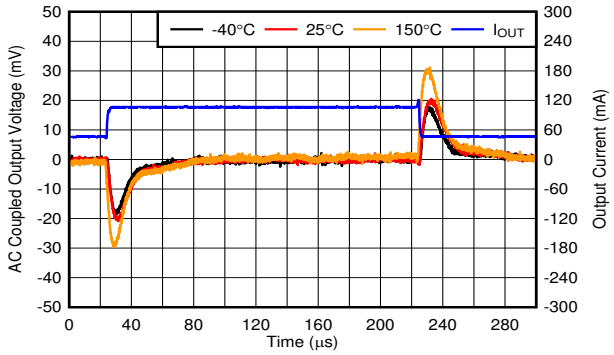


**Figure 7-15. Transient Response**

## 7.3 Power Supply Recommendations

This device is designed for operation from an input voltage supply with a range between 3V and 40V. This input supply must be well regulated. If the input supply is located more than a few inches from the TPS7B85-Q1, add an electrolytic capacitor and a ceramic bypass capacitor at the input.

## 7.4 Layout

### 7.4.1 Layout Guidelines

For best overall performance, place all circuit components on the same side of the circuit board and as near as practical to the respective LDO pin connections. Place ground return connections to the input and output capacitor, and to the LDO ground pin as close as possible to each other, connected by a wide, component-side, copper surface. The use of vias and long traces to the input and output capacitors is strongly discouraged and negatively affects system performance. TI also recommends a ground reference plane either embedded in the PCB itself or located on the bottom side of the PCB opposite the components. This reference plane serves to assure accuracy of the output voltage, shield noise, and behaves similarly to a thermal plane to spread (or sink) heat from the LDO device when connected to the thermal pad. In most applications, this ground plane is necessary to meet thermal requirements.

#### 7.4.1.1 Package Mounting

Solder pad footprint recommendations for the TPS7B85-Q1 are available at the end of this document and at www.ti.com.


Copyright © 2026 Texas Instruments Incorporated

#### 7.4.1.2 Board Layout Recommendations to Improve PSRR and Noise Performance

As depicted in Figure 7-16, place the input and output capacitors close to the device for the layout of the TPS7B85-Q1. In order to enhance the thermal performance, place as many vias as possible around the device. These vias improve the heat transfer between the different GND planes in the PCB.

To improve ac performance such as PSRR, output noise, and transient response, TI recommends a board design with separate ground planes for IN and OUT, with each ground plane connected only at the GND pin of the device. In addition, the ground connection for the output capacitor must connect directly to the GND pin of the device.

Minimize equivalent series inductance (ESL) and ESR in order to maximize performance and ensure stability. Place each capacitor as close as possible to the device and on the same side of the PCB as the regulator itself.

Do not place any of the capacitors on the opposite side of the PCB from where the regulator is installed. TI strongly discourages the use of vias and long traces to connect the capacitors because these can negatively impact system performance and may even cause instability.

If possible, and to ensure the maximum performance specified in this document, use the same layout pattern used for the TPS7B85-Q1 evaluation board, available at www.ti.com.

### *7.4.2 Layout Example*

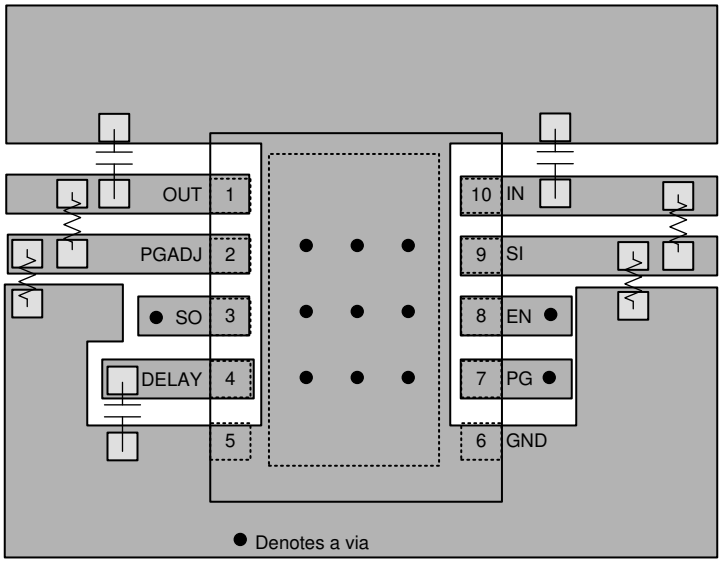


**Figure 7-16. VSON (DRC) Layout**

# 8 Device and Documentation Support

## 8.1 Device Support

### *8.1.1 Device Nomenclature*

**Table 8-1. Device Nomenclature(1)**

| PRODUCT | $V_{OUT}$ |
|---|---|
| TPS7B85**xxQWyyyRQ1** | **xx** is the nominal output voltage (for example, 33 = 3.3V; 50 = 5.0V).<br>**Q** indicates that this device is a grade-1 device in accordance with the AEC-Q100 standard.<br>**W** indicates the package has wettable flanks.<br>**yyy** is the package designator.<br>**R** is the package quantity. R is for reel (3000 pieces).<br>**Q1** indicates that this device is an automotive grade (AEC-Q100) device. |

(1) For the most current package and ordering information see the Package Option Addendum at the end of this document, or visit the device product folder on www.ti.com.

## 8.2 Receiving Notification of Documentation Updates

To receive notification of documentation updates, navigate to the device product folder on ti.com. Click on *Notifications* to register and receive a weekly digest of any product information that has changed. For change details, review the revision history included in any revised document.

## 8.3 Support Resources

TI E2E™ support forums are an engineer's go-to source for fast, verified answers and design help — straight from the experts. Search existing answers or ask your own question to get the quick design help you need.

Linked content is provided "AS IS" by the respective contributors. They do not constitute TI specifications and do not necessarily reflect TI's views; see TI's Terms of Use.

## 8.4 Trademarks

TI E2E™ is a trademark of Texas Instruments.
All trademarks are the property of their respective owners.

## 8.5 Electrostatic Discharge Caution



This integrated circuit can be damaged by ESD. Texas Instruments recommends that all integrated circuits be handled with appropriate precautions. Failure to observe proper handling and installation procedures can cause damage.

ESD damage can range from subtle performance degradation to complete device failure. Precision integrated circuits may be more susceptible to damage because very small parametric changes could cause the device not to meet its published specifications.

## 8.6 Glossary

TI Glossary — This glossary lists and explains terms, acronyms, and definitions.


Copyright © 2026 Texas Instruments Incorporated

## 9 Revision History

NOTE: Page numbers for previous revisions may differ from page numbers in the current version.

| Changes from Revision A (November 2020) to Revision B (November 2026) | Page |
|---|---|
| • Updated EN pin ratings for reliable operation of the device | 4 |
| • Updated EN pin ratings for reliable operation of the device | 4 |

| Changes from Revision * (February 2020) to Revision A (November 2020) | Page |
|---|---|
| • Changed document status from advanced information to production data | 1 |

## 10 Mechanical, Packaging, and Orderable Information

The following pages include mechanical, packaging, and orderable information. This information is the most current data available for the designated devices. This data is subject to change without notice and revision of this document. For browser-based versions of this data sheet, refer to the left-hand navigation.

Copyright © 2026 Texas Instruments Incorporated

## PACKAGING INFORMATION

| Orderable part number | Status (1) | Material type (2) | Package \| Pins | Package qty \| Carrier | RoHS (3) | Lead finish/ Ball material (4) | MSL rating/ Peak reflow (5) | Op temp (°C) | Part marking (6) |
|---|---|---|---|---|---|---|---|---|---|
| TPS7B8533QWDRCRQ1 | Active | Production | VSON (DRC) \| 10 | 3000 \| LARGE T&R | Yes | NIPDAU | Level-2-260C-1 YEAR | -40 to 150 | 7B8533 |
| TPS7B8533QWDRCRQ1.A | Active | Production | VSON (DRC) \| 10 | 3000 \| LARGE T&R | Yes | NIPDAU | Level-2-260C-1 YEAR | -40 to 150 | 7B8533 |
| TPS7B8550QWDRCRQ1 | Active | Production | VSON (DRC) \| 10 | 3000 \| LARGE T&R | Yes | NIPDAU | Level-2-260C-1 YEAR | -40 to 150 | 7B8550 |
| TPS7B8550QWDRCRQ1.A | Active | Production | VSON (DRC) \| 10 | 3000 \| LARGE T&R | Yes | NIPDAU | Level-2-260C-1 YEAR | -40 to 150 | 7B8550 |

(1) **Status:** For more details on status, see our product life cycle.

(2) **Material type:** When designated, preproduction parts are prototypes/experimental devices, and are not yet approved or released for full production. Testing and final process, including without limitation quality assurance, reliability performance testing, and/or process qualification, may not yet be complete, and this item is subject to further changes or possible discontinuation. If available for ordering, purchases will be subject to an additional waiver at checkout, and are intended for early internal evaluation purposes only. These items are sold without warranties of any kind.

(3) **RoHS values:** Yes, No, RoHS Exempt. See the TI RoHS Statement for additional information and value definition.

(4) **Lead finish/Ball material:** Parts may have multiple material finish options. Finish options are separated by a vertical ruled line. Lead finish/Ball material values may wrap to two lines if the finish value exceeds the maximum column width.

(5) **MSL rating/Peak reflow:** The moisture sensitivity level ratings and peak solder (reflow) temperatures. In the event that a part has multiple moisture sensitivity ratings, only the lowest level per JEDEC standards is shown. Refer to the shipping label for the actual reflow temperature that will be used to mount the part to the printed circuit board.

(6) **Part marking:** There may be an additional marking, which relates to the logo, the lot trace code information, or the environmental category of the part.

Multiple part markings will be inside parentheses. Only one part marking contained in parentheses and separated by a "~" will appear on a part. If a line is indented then it is a continuation of the previous line and the two combined represent the entire part marking for that device.

**Important Information and Disclaimer:**The information provided on this page represents TI's knowledge and belief as of the date that it is provided. TI bases its knowledge and belief on information provided by third parties, and makes no representation or warranty as to the accuracy of such information. Efforts are underway to better integrate information from third parties. TI has taken and continues to take reasonable steps to provide representative and accurate information but may not have conducted destructive testing or chemical analysis on incoming materials and chemicals. TI and TI suppliers consider certain information to be proprietary, and thus CAS numbers and other limited information may not be available for release.

In no event shall TI's liability arising out of such information exceed the total purchase price of the TI part(s) at issue in this document sold by TI to Customer on an annual basis.

## TAPE AND REEL INFORMATION

**REEL DIMENSIONS**

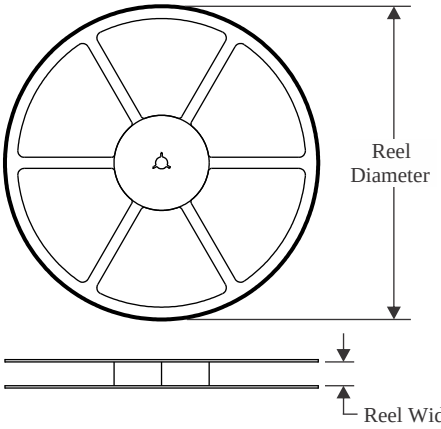


**TAPE DIMENSIONS**

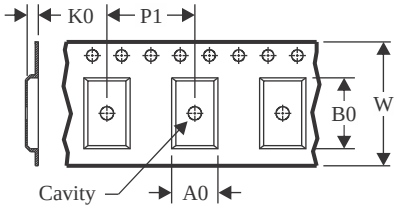


| | |
|---|---|
| A0 | Dimension designed to accommodate the component width |
| B0 | Dimension designed to accommodate the component length |
| K0 | Dimension designed to accommodate the component thickness |
| W | Overall width of the carrier tape |
| P1 | Pitch between successive cavity centers |

**QUADRANT ASSIGNMENTS FOR PIN 1 ORIENTATION IN TAPE**

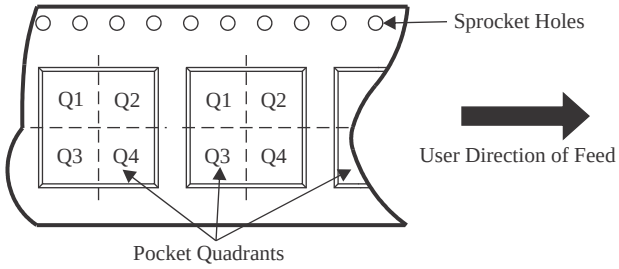


*All dimensions are nominal

| Device | Package Type | Package Drawing | Pins | SPQ | Reel Diameter (mm) | Reel Width W1 (mm) | A0 (mm) | B0 (mm) | K0 (mm) | P1 (mm) | W (mm) | Pin1 Quadrant |
|---|---|---|---|---|---|---|---|---|---|---|---|---|
| TPS7B8533QWDRCRQ1 | VSON | DRC | 10 | 3000 | 330.0 | 12.4 | 3.3 | 3.3 | 1.1 | 8.0 | 12.0 | Q2 |
| TPS7B8550QWDRCRQ1 | VSON | DRC | 10 | 3000 | 330.0 | 12.4 | 3.3 | 3.3 | 1.1 | 8.0 | 12.0 | Q2 |

TAPE AND REEL BOX DIMENSIONS

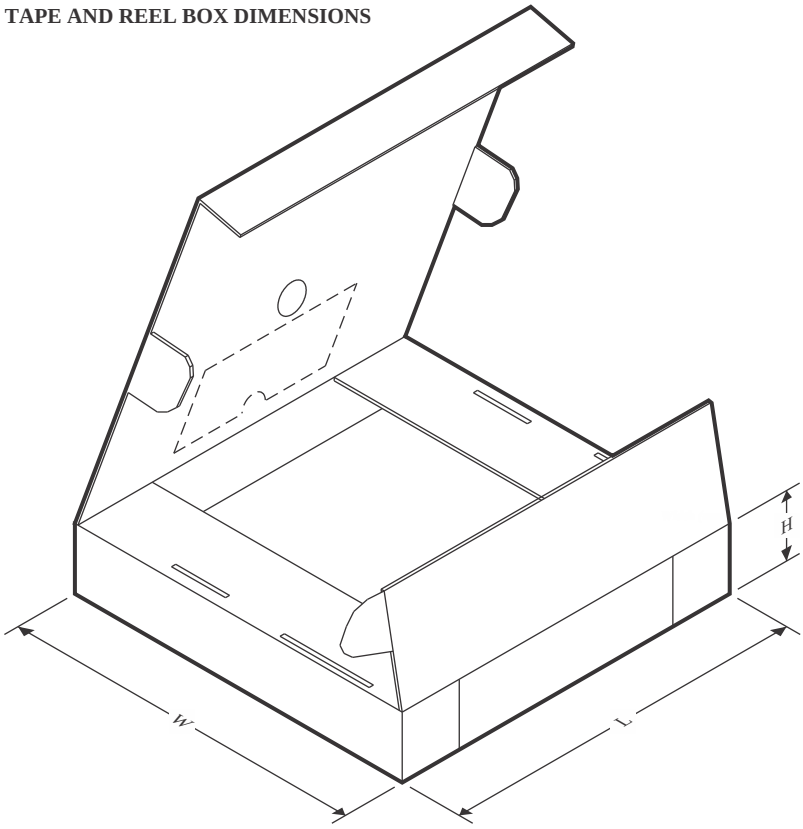


*All dimensions are nominal

| Device | Package Type | Package Drawing | Pins | SPQ | Length (mm) | Width (mm) | Height (mm) |
|---|---|---|---|---|---|---|---|
| TPS7B8533QWDRCRQ1 | VSON | DRC | 10 | 3000 | 367.0 | 367.0 | 35.0 |
| TPS7B8550QWDRCRQ1 | VSON | DRC | 10 | 3000 | 367.0 | 367.0 | 35.0 |

# GENERIC PACKAGE VIEW

## DRC 10

## VSON - 1 mm max height

**3 x 3, 0.5 mm pitch**

PLASTIC SMALL OUTLINE - NO LEAD

This image is a representation of the package family, actual package may vary.
Refer to the product data sheet for package details.

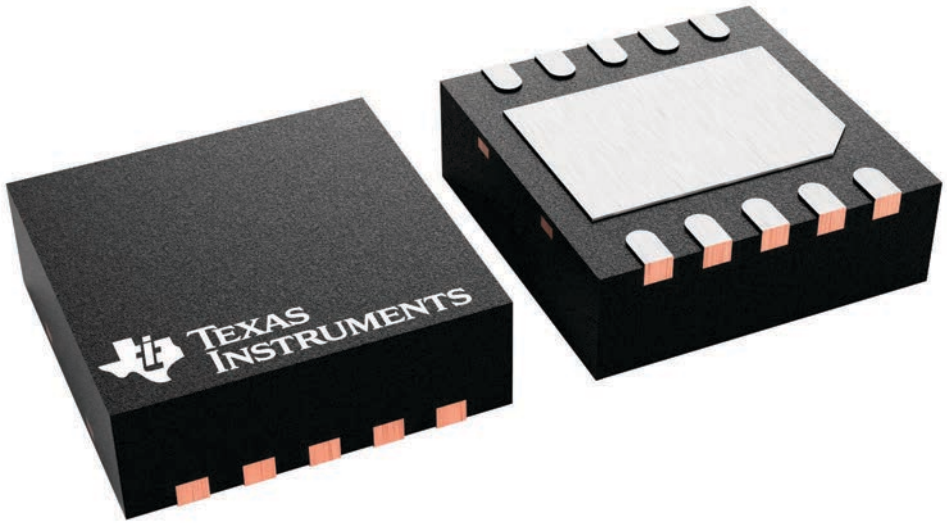


4226193/A

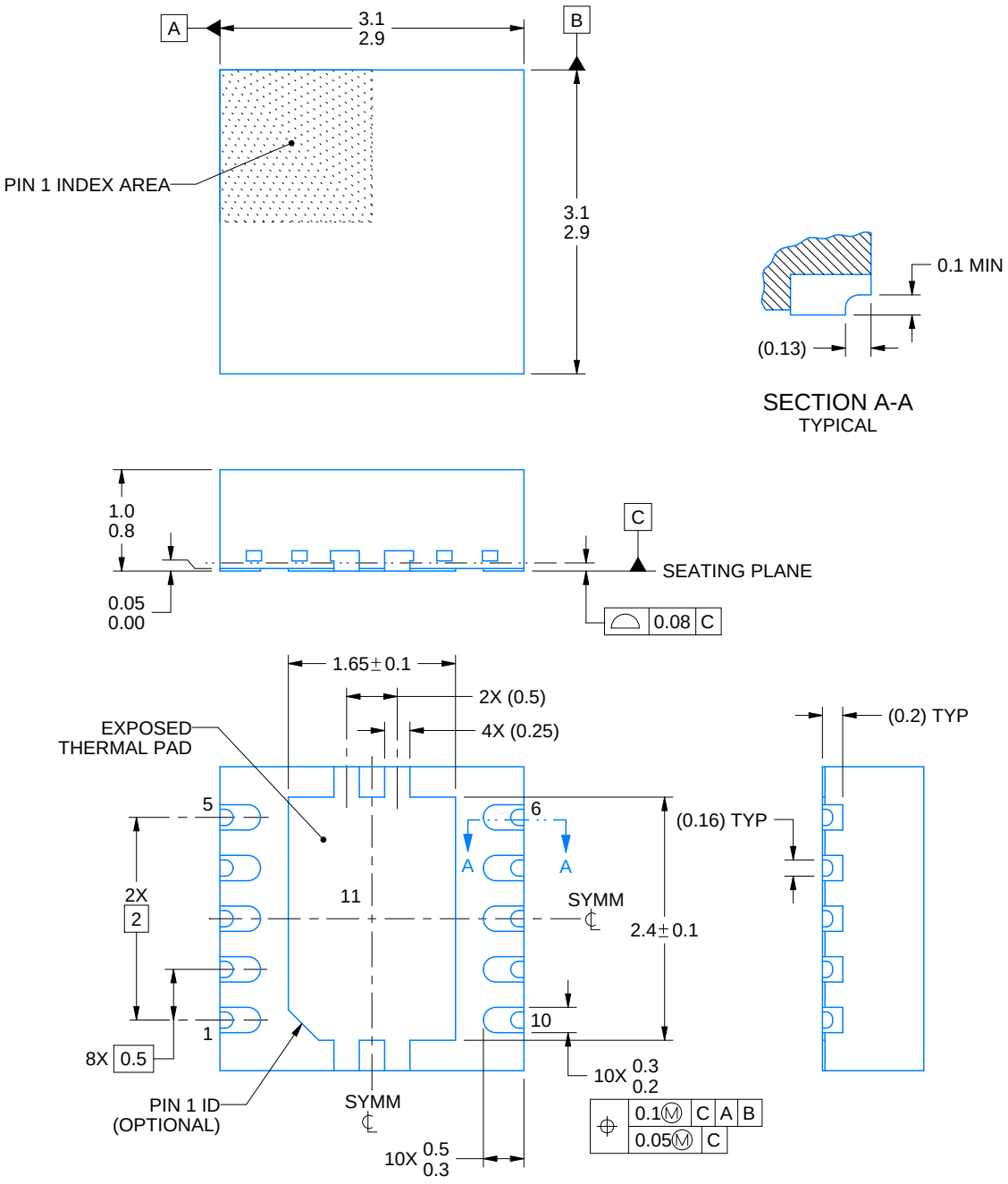


NOTES:

1. All linear dimensions are in millimeters. Any dimensions in parenthesis are for reference only. Dimensioning and tolerancing per ASME Y14.5M.
2. This drawing is subject to change without notice.
3. The package thermal pad must be soldered to the printed circuit board for optimal thermal and mechanical performance.

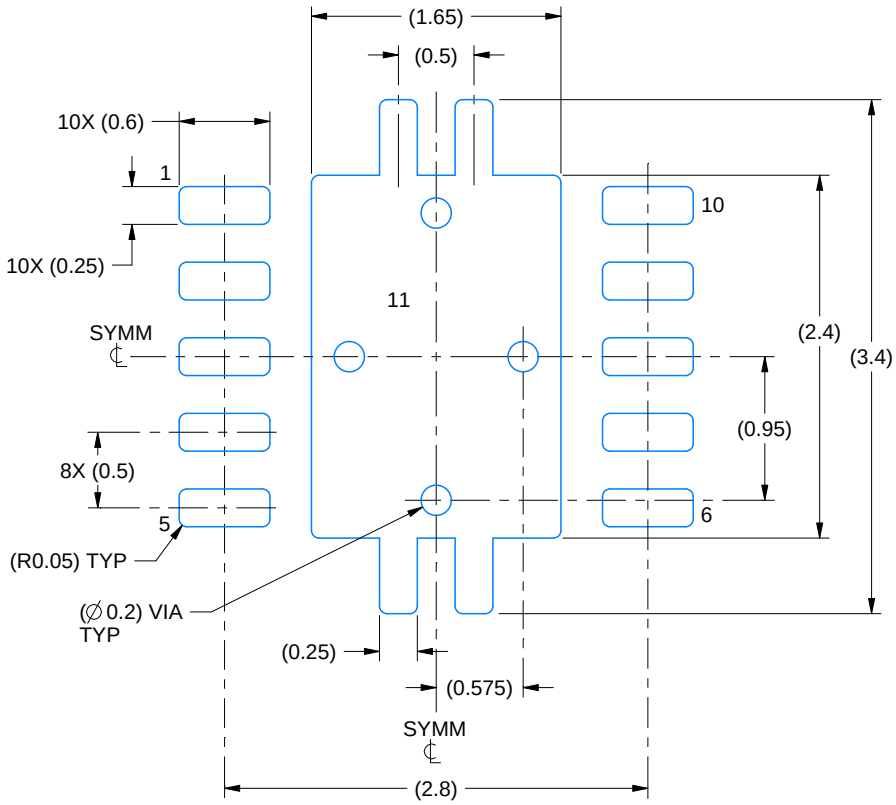


LAND PATTERN EXAMPLE
EXPOSED METAL SHOWN
SCALE:20X

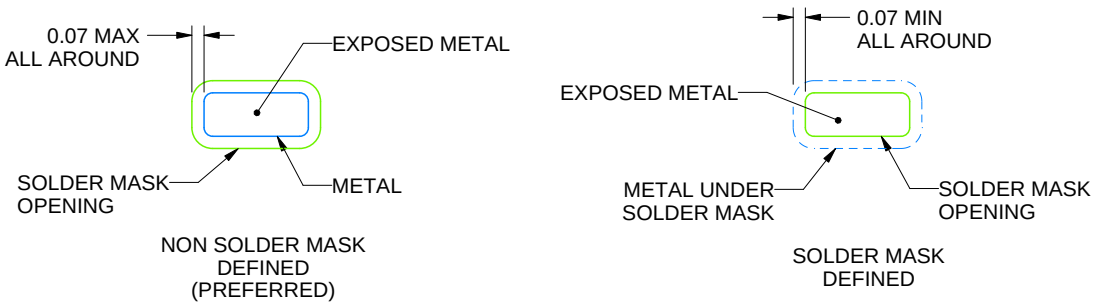


SOLDER MASK DETAILS

4225163/A 07/2019

NOTES: (continued)

4. This package is designed to be soldered to a thermal pad on the board. For more information, see Texas Instruments literature number SLUA271 (www.ti.com/lit/slua271).
5. Vias are optional depending on application, refer to device data sheet. If any vias are implemented, refer to their locations shown on this view. It is recommended that vias under paste be filled, plugged or tented.

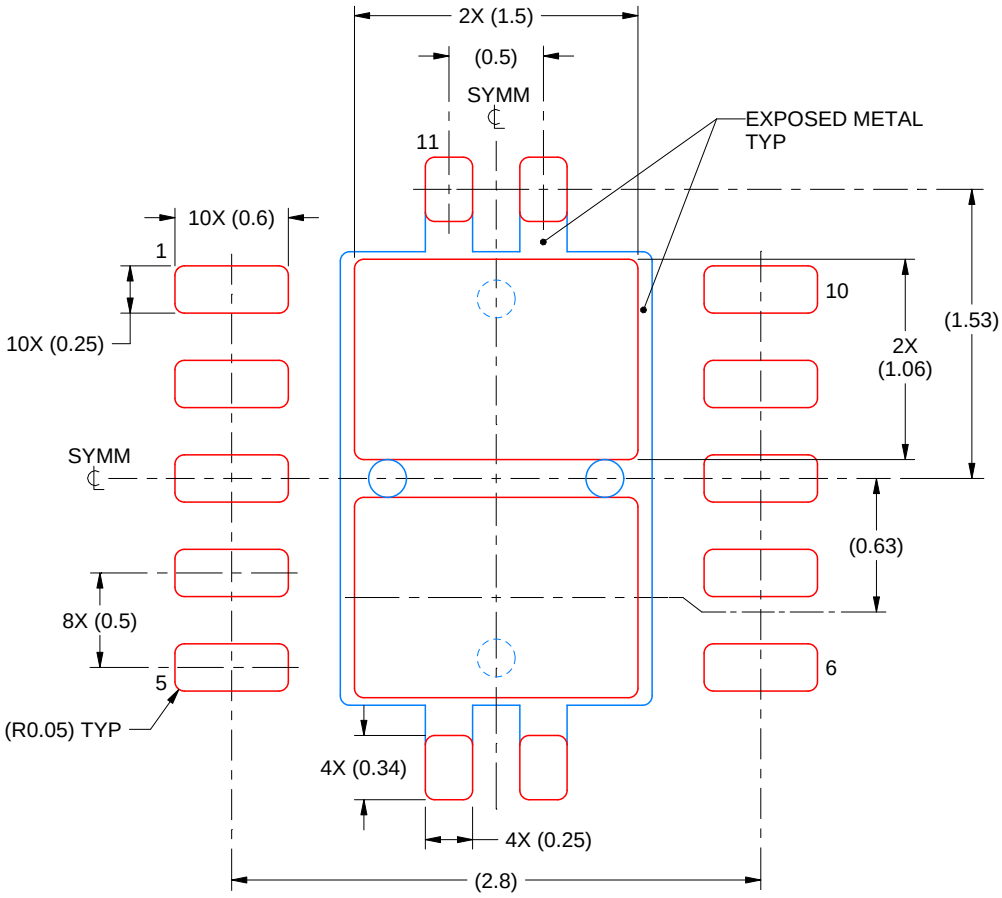


SOLDER PASTE EXAMPLE
BASED ON 0.125 mm THICK STENCIL

EXPOSED PAD 11:
80% PRINTED SOLDER COVERAGE BY AREA
SCALE:25X

4225163/A 07/2019

NOTES: (continued)

6. Laser cutting apertures with trapezoidal walls and rounded corners may offer better paste release. IPC-7525 may have alternate design recommendations.

# IMPORTANT NOTICE AND DISCLAIMER

TI PROVIDES TECHNICAL AND RELIABILITY DATA (INCLUDING DATASHEETS), DESIGN RESOURCES (INCLUDING REFERENCE DESIGNS), APPLICATION OR OTHER DESIGN ADVICE, WEB TOOLS, SAFETY INFORMATION, AND OTHER RESOURCES “AS IS” AND WITH ALL FAULTS, AND DISCLAIMS ALL WARRANTIES, EXPRESS AND IMPLIED, INCLUDING WITHOUT LIMITATION ANY IMPLIED WARRANTIES OF MERCHANTABILITY, FITNESS FOR A PARTICULAR PURPOSE OR NON-INFRINGEMENT OF THIRD PARTY INTELLECTUAL PROPERTY RIGHTS.

These resources are intended for skilled developers designing with TI products. You are solely responsible for (1) selecting the appropriate TI products for your application, (2) designing, validating and testing your application, and (3) ensuring your application meets applicable standards, and any other safety, security, regulatory or other requirements.

These resources are subject to change without notice. TI grants you permission to use these resources only for development of an application that uses the TI products described in the resource. Other reproduction and display of these resources is prohibited. No license is granted to any other TI intellectual property right or to any third party intellectual property right. TI disclaims responsibility for, and you fully indemnify TI and its representatives against any claims, damages, costs, losses, and liabilities arising out of your use of these resources.

TI’s products are provided subject to TI’s Terms of Sale, TI’s General Quality Guidelines, or other applicable terms available either on ti.com or provided in conjunction with such TI products. TI’s provision of these resources does not expand or otherwise alter TI’s applicable warranties or warranty disclaimers for TI products. Unless TI explicitly designates a product as custom or customer-specified, TI products are standard, catalog, general purpose devices.

TI objects to and rejects any additional or different terms you may propose.

Copyright © 2026, Texas Instruments Incorporated

Last updated 10/2025

ENTEGRECİ

Bu belge www.entegreci.com üzerinden sunulmaktadır.

# Elektronik komponent tedarikinde Entegreci

Entegreci, Eskişehir merkezli, Türkiye geneline satış yapan bir elektronik komponent mağazasıdır. Entegreler (IC), mikrodenetleyiciler, transistörler, diyotlar, pasif elemanlar, konnektörler, modüller ve geliştirme kartları tek adetten seri üretim adetlerine kadar satılır. Ürün sayfalarında güncel stok durumunu, fiyatı ve datasheet bağlantısını bulabilirsiniz.

### Parça koduyla arama

Üretici parça numarasını yazın; stok ve fiyatı hemen görün.

**www.entegreci.com**

### Ürün kategorileri

Entegreden kapasitöre tüm elektronik komponent kategorileri.

**Kategorilere göz atın**

### Üreticiler

Aradığınız üreticinin ürünlerini tek sayfada inceleyin.

**Üreticileri görün**

### Toplu alım ve teklif

Listede olmayan ya da yüksek adetli parçalar için teklif isteyin.

**Teklif isteyin**

**www.entegreci.com** | **destek@entegreci.com** | **0850 305 90 34**

Entegreci is an online electronic components store based in Türkiye. Search by manufacturer part number to see stock, prices and datasheets for integrated circuits, microcontrollers, transistors, passive components and connectors, or request a quote for parts that are not listed.

Bu sayfa Entegreci tarafından eklenmiştir. Belgenin önceki sayfaları asıl yayıncısına aittir ve içeriği değiştirilmemiştir; en güncel sürüm için belgenin yayıncısına başvurun.